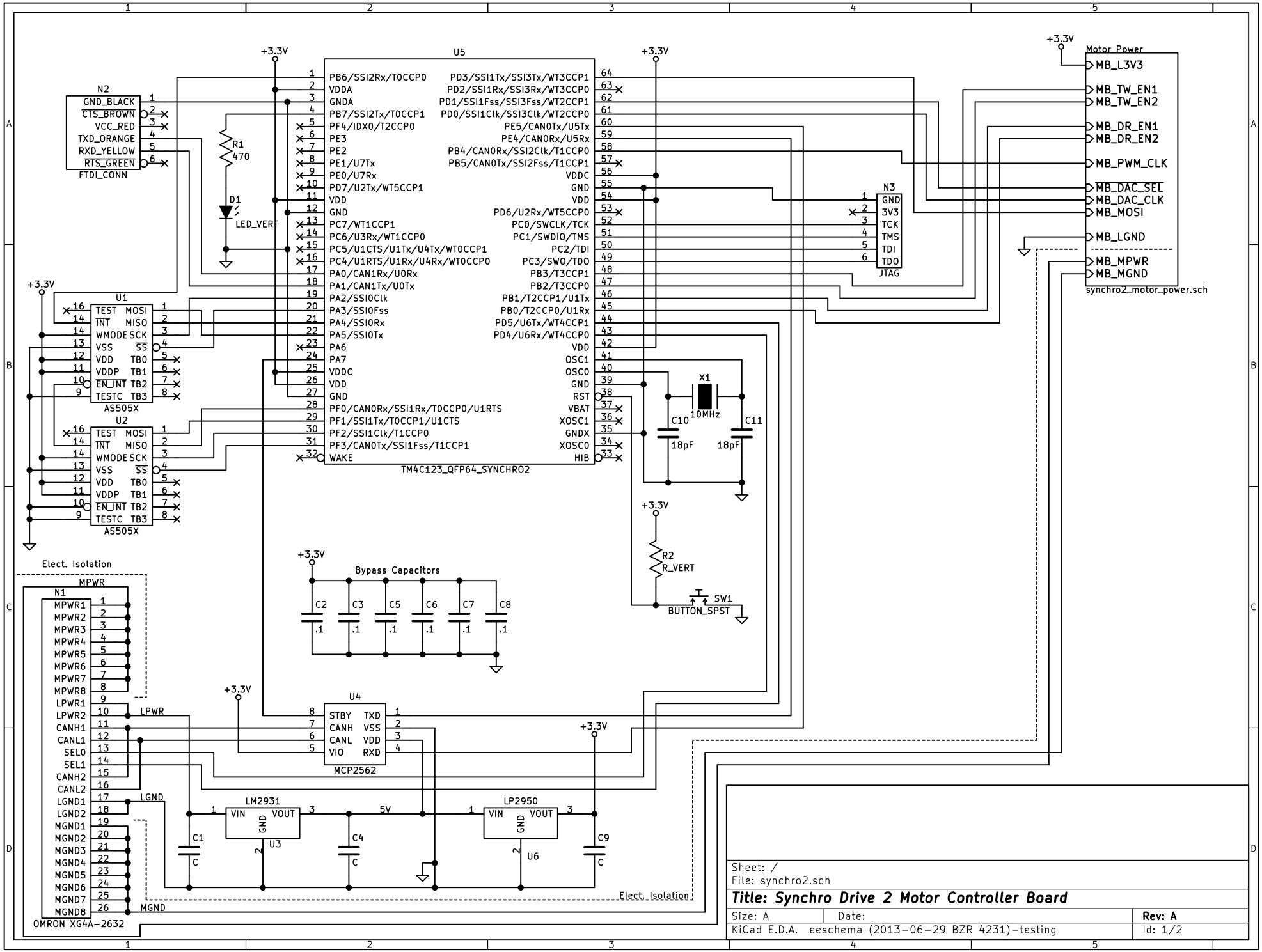
U5
TM4C123_QFP64_SYNCHRO2
PB6/SSI2Rx/T0CCP0
VDDA
GNDA
PB7/SSI2Tx/T0CCP1
PF4/IDX0/T2CCP0
PE3
PE2
PE1/U7Tx
PE0/U7Rx
PD7/U2Tx/WT5CCP1
VDD
GND
PC7/WT1CCP1
PC6/U3Rx/WT1CCP0
PC5/U1CTS/U1Tx/U4Tx/WT0CCP1
PC4/U1RTS/U1Rx/U4Rx/WT0CCP0
PA0/CAN1Rx/U0Rx
PA1/CAN1Tx/U0Tx
PA2/SSI0Clk
PA3/SSI0Fss
PA4/SSI0Rx
PA5/SSI0Tx
PA6
PA7
VDDC
VDD
GND
PF0/CAN0Rx/SSI1Rx/T0CCP0/U1RTS
PF1/SSI1Tx/T0CCP1/U1CTS
PF2/SSI1Clk/T1CCP0
PF3/CAN0Tx/SSI1Fss/T1CCP1
WAKE
PD3/SSI1Tx/SSI3Tx/WT3CCP1
PD2/SSI1Rx/SSI3Rx/WT3CCP0
PD1/SSI1Fss/SSI3Fss/WT2CCP1
PD0/SSI1Clk/SSI3Clk/WT2CCP0
PE5/CAN0Tx/U5Tx
PE4/CAN0Rx/U5Rx
PB4/CAN0Rx/SSI2Clk/T1CCP0
PB5/CAN0Tx/SSI2Fss/T1CCP1
VDDC
GND
VDD
PD6/U2Rx/WT5CCP0
PC0/SWCLK/TCK
PC1/SWDIO/TMS
PC2/TDI
PC3/SWO/TDO
PB3/T3CCP1
PB2/T3CCP0
PB1/T2CCP1/U1Tx
PB0/T2CCP0/U1Rx
PD5/U6Tx/WT4CCP1
PD4/U6Rx/WT4CCP0
VDD
OSC1
OSC0
GND
RST
VBAT
XOSC1
GNDX
XOSC0
HIB
N2
FTDI_CONN
GND_BLACK
CTS_BROWN
VCC_RED
TXD_ORANGE
RXD_YELLOW
RTS_GREEN
R1
470
D1
LED_VERT
U1
AS505X
U2
AS505X
TEST
INT
WMODE
VSS
VDD
VDDP
EN_INT
TESTC
MOSI
MISO
SCK
SS
TB0
TB1
TB2
TB3
N3
JTAG
GND
3V3
TCK
TMS
TDI
TDO
X1
10MHz
C10
18pF
C11
18pF
R2
R_VERT
SW1
BUTTON_SPST
Bypass Capacitors
C2
C3
C5
C6
C7
C8
.1
Elect. Isolation
MPWR
N1
OMRON XG4A-2632
MPWR1
MPWR2
MPWR3
MPWR4
MPWR5
MPWR6
MPWR7
MPWR8
LPWR1
LPWR2
CANH1
CANL1
SEL0
SEL1
CANH2
CANL2
LGND1
LGND2
MGND1
MGND2
MGND3
MGND4
MGND5
MGND6
MGND7
MGND8
LPWR
LGND
MGND
U4
MCP2562
STBY
CANH
CANL
VIO
TXD
VSS
VDD
RXD
LM2931
U3
VIN
VOUT
GND
5V
C1
C
C4
C
LP2950
U6
C9
C
Motor Power
synchro2_motor_power.sch
MB_L3V3
MB_TW_EN1
MB_TW_EN2
MB_DR_EN1
MB_DR_EN2
MB_PWM_CLK
MB_DAC_SEL
MB_DAC_CLK
MB_MOSI
MB_LGND
MB_MPWR
MB_MGND
+3.3V
Sheet: /
File: synchro2.sch
Title: Synchro Drive 2 Motor Controller Board
Size: A
Date:
Rev: A
KiCad E.D.A. eeschema (2013-06-29 BZR 4231)-testing
Id: 1/2

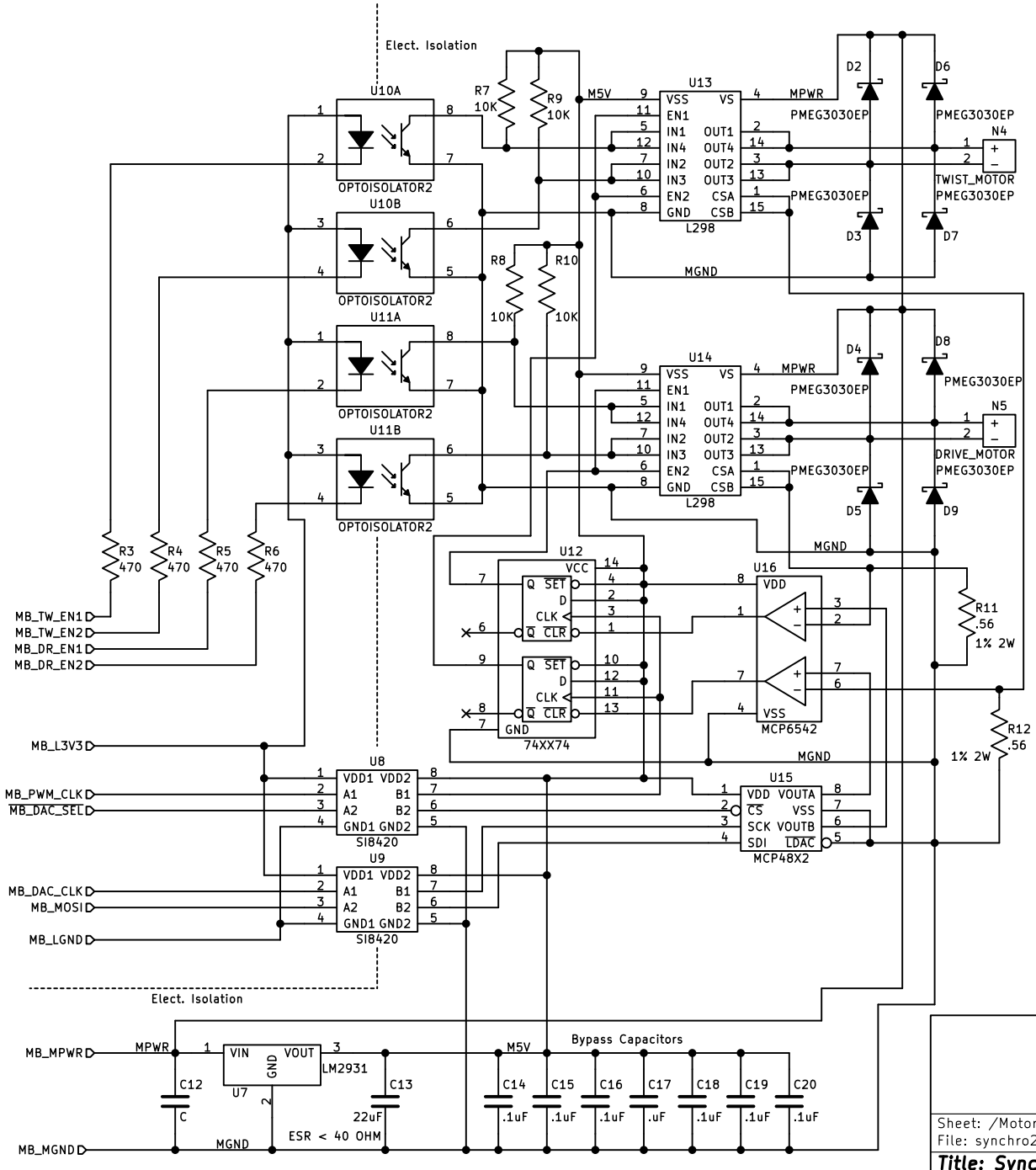

Sheet: /Motor_Power/
File: synchro2_motor_power.sch

Title: Synchro Drive Motor Power

Size: A	Date:	Rev: A
KiCad E.D.A. eeschema (2013-06-29 BZR 4231)-testing		Id: 2/2