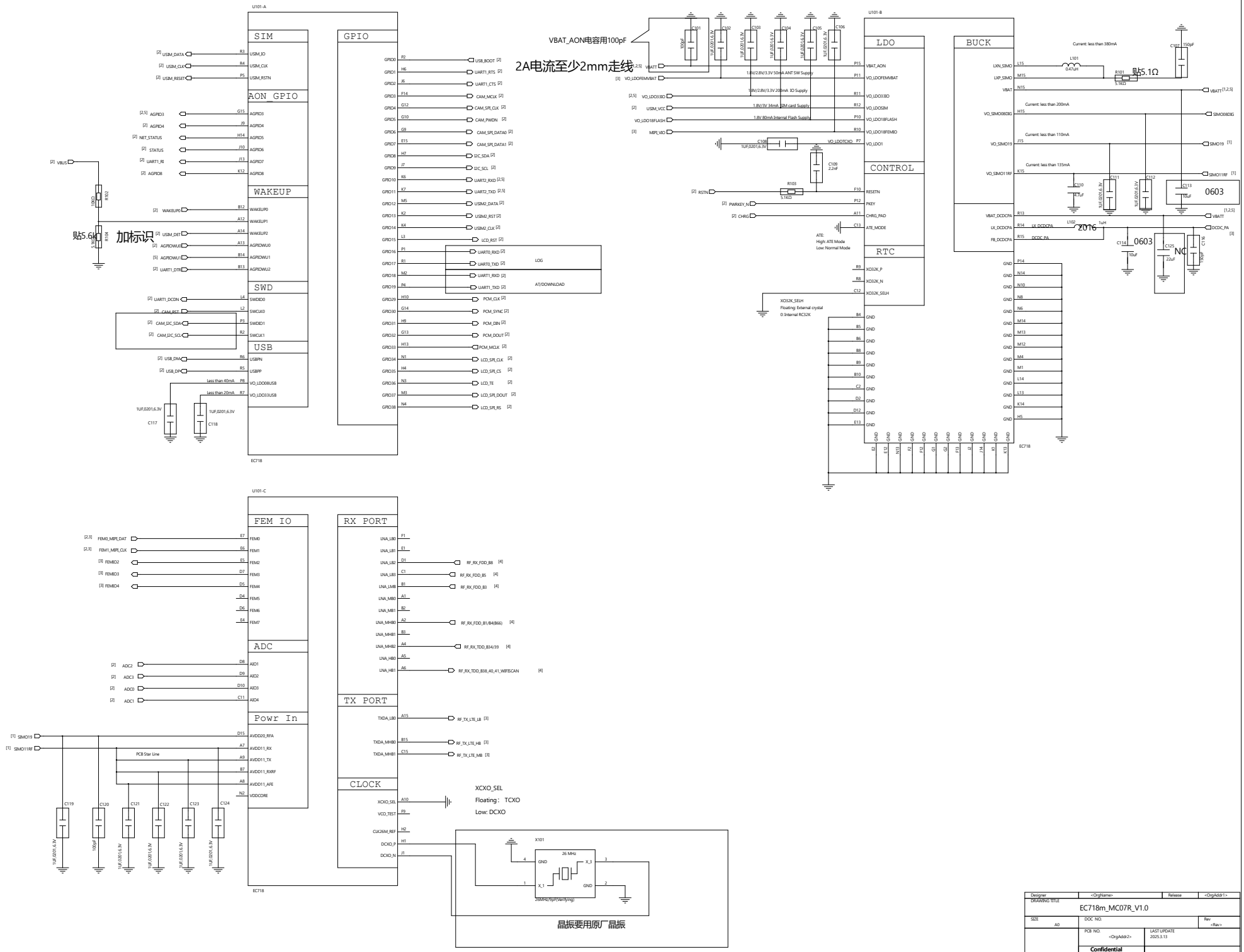

Designer	<OrgName>	Release	<OrgAddr1>
DRAWING TITLE	EC718m_MC07R_V1.0		
SIZE A0	DOC NO.		Rev <Rev>
	PCB NO. <OrgAddr2>	LAST UPDATE 2025.3.13	
	Confidential	Sheet 1 of 5	

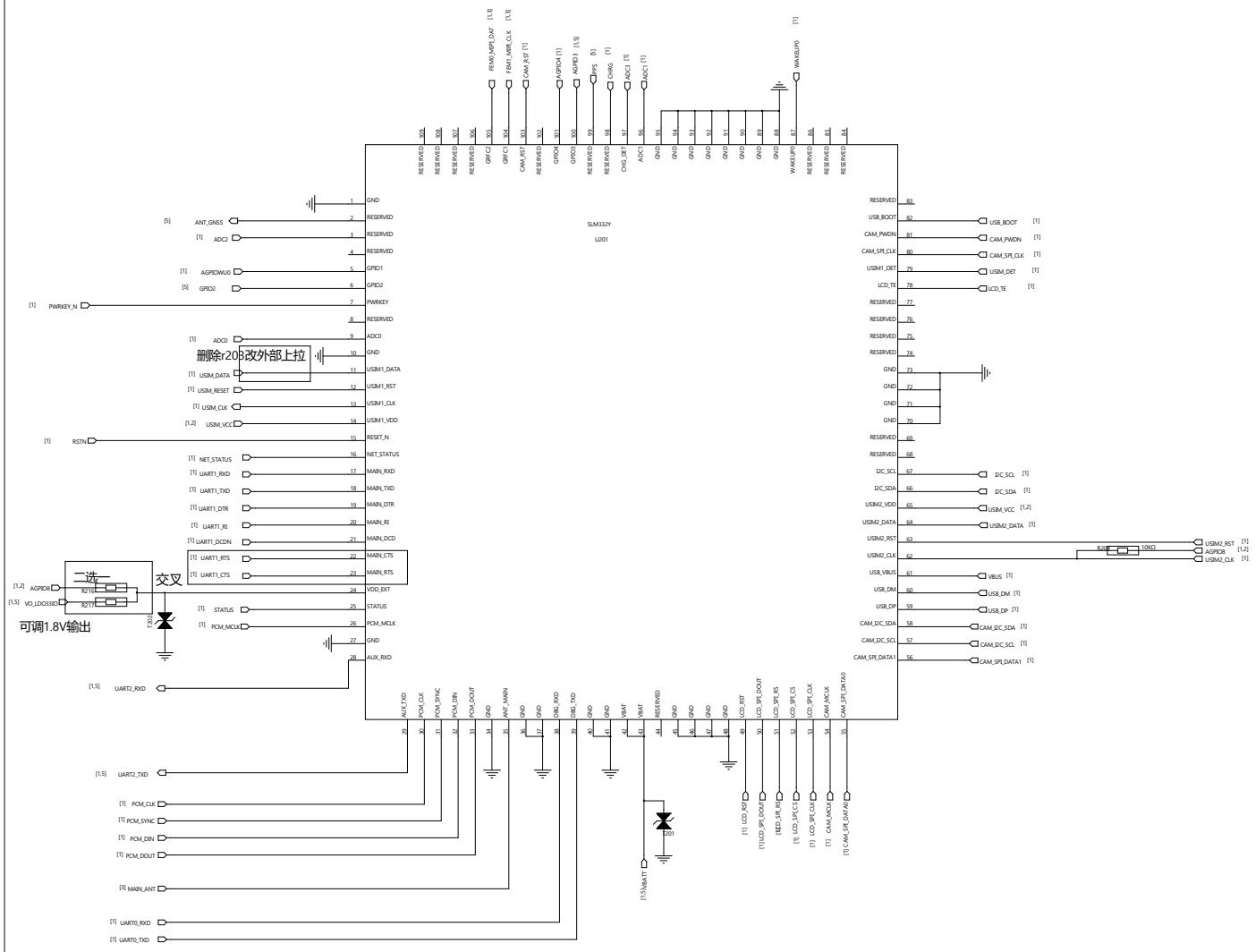

Designer	<OrgName>	Release	<OrgAddr1>
DRAWING TITLE	EC718m_MC07R_V1.0		
SIZE A0	DOC NO.		Rev <Rev>
	PCB NO. <OrgAddr2>	LAST UPDATE 2025.3.13	
	Confidential	Sheet 2 of 5	

LTE PAM

PA Part

Ipp=0.7A

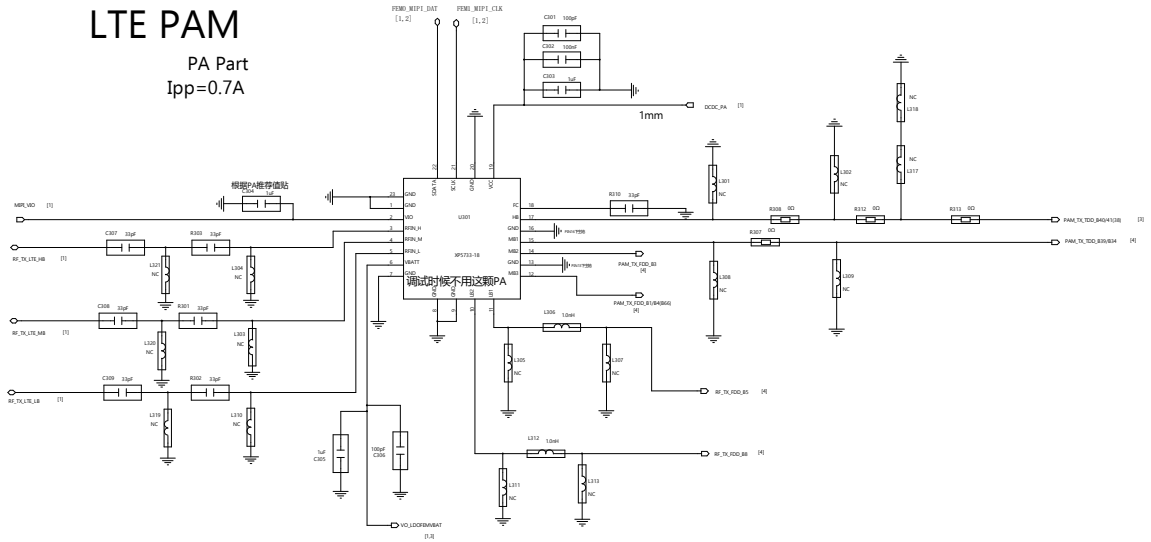

SP8T

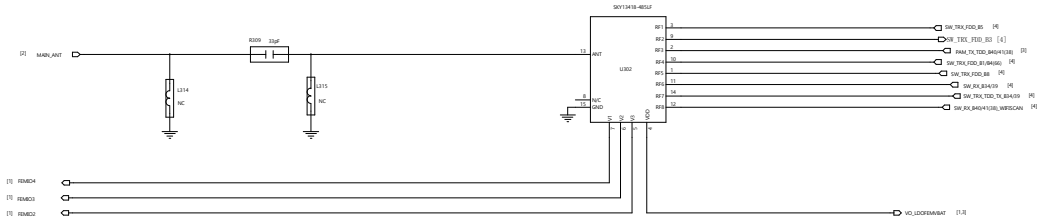

FDD TRX

B1

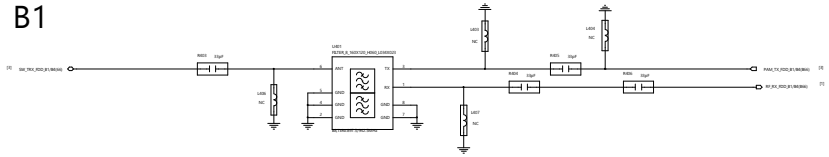

B3

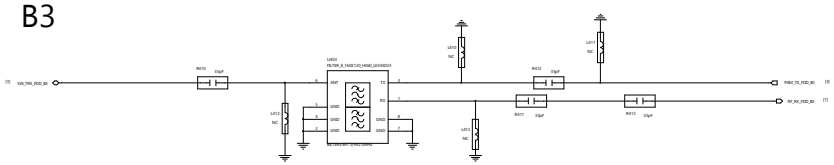

B5

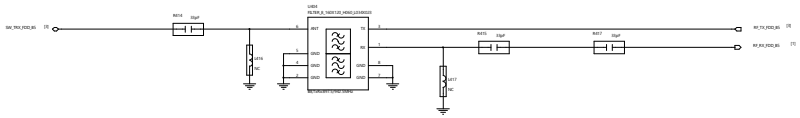

B8

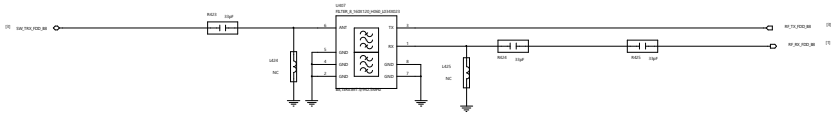

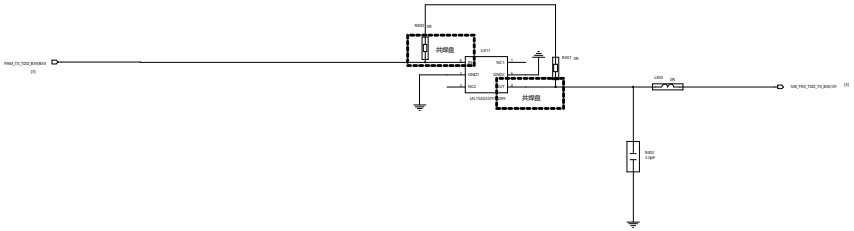

TDD Path

TDD_PRX_B34/39

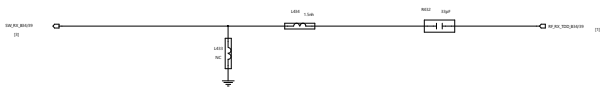

TDD_B40/B41(38) RX

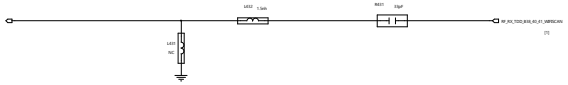

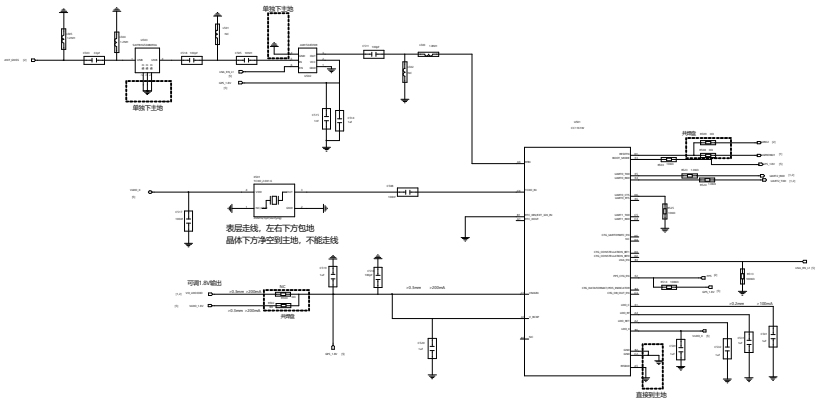
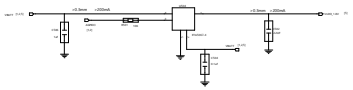
LDO给GPS1.8V供电