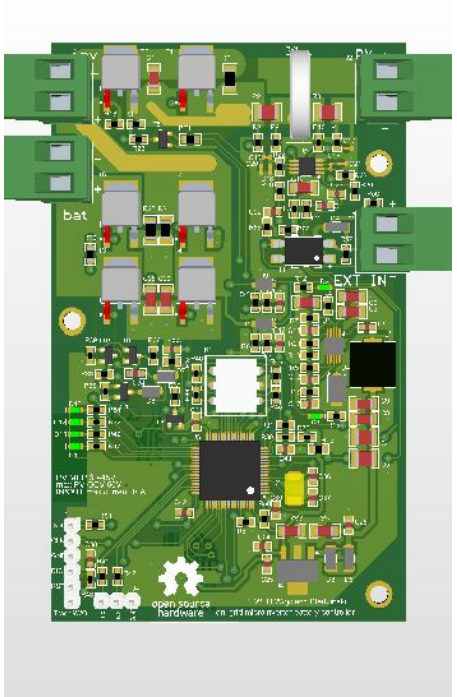
bat
EXT_IN
open source
hardware

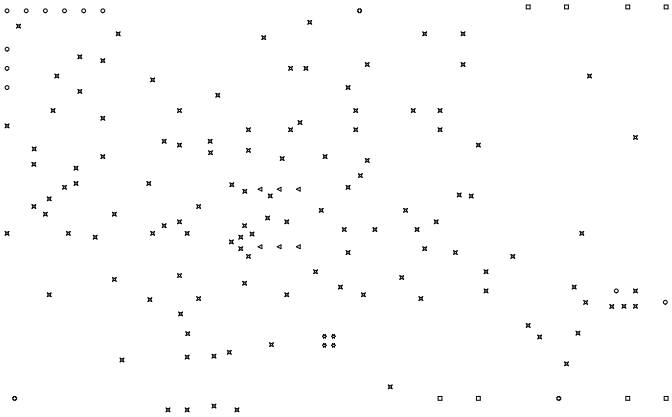

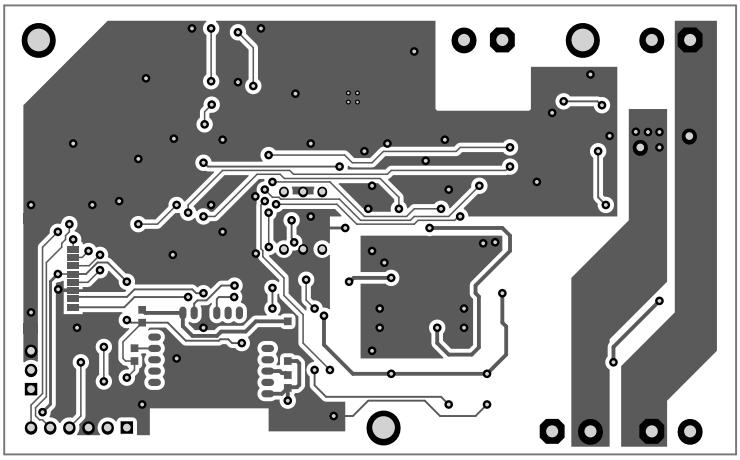

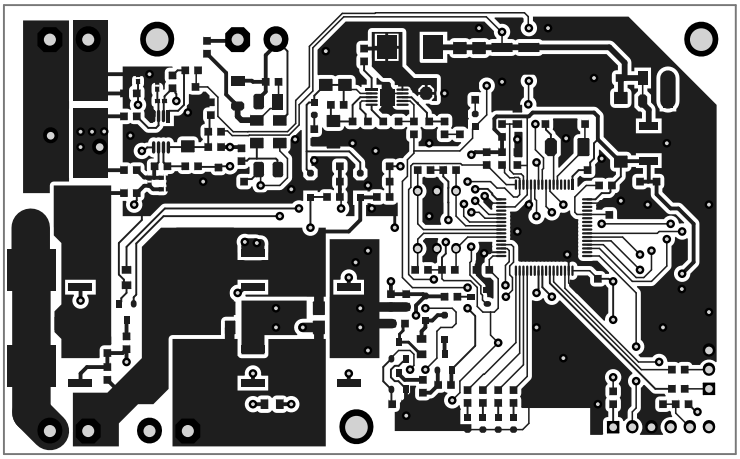

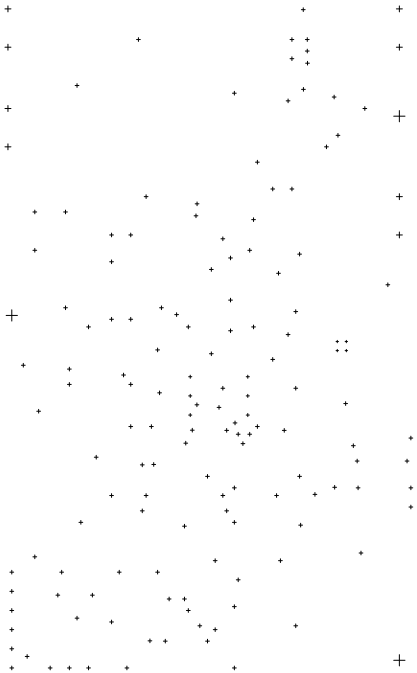

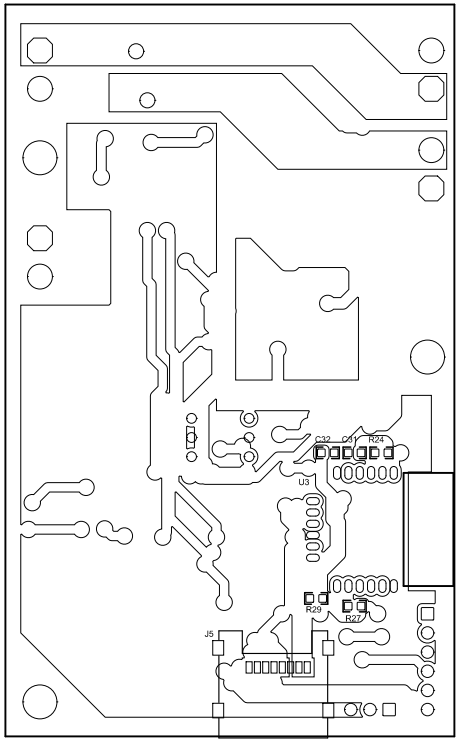
C32
C41
R24
U3
R29
R27
J5

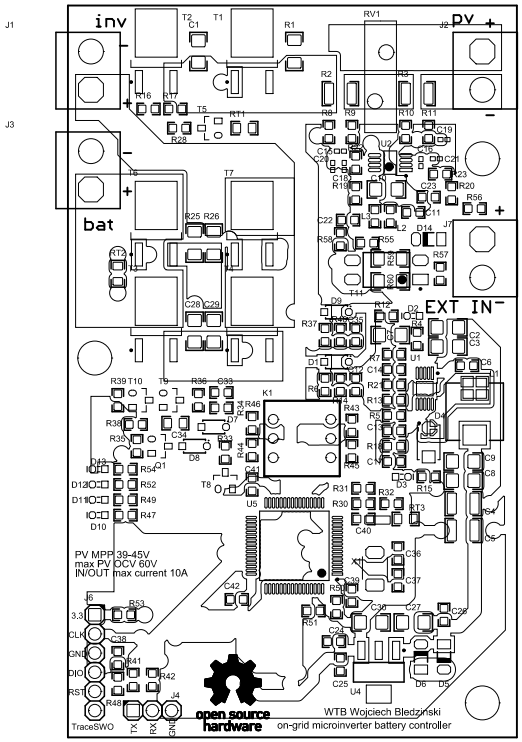
inv
pv
bat
EXT IN
PV MPP 39-45V
max PV OCV 60V
IN/OUT max current 10A
open source hardware
WTB Wojciech Bledzinski
on-grid microinverter battery controller

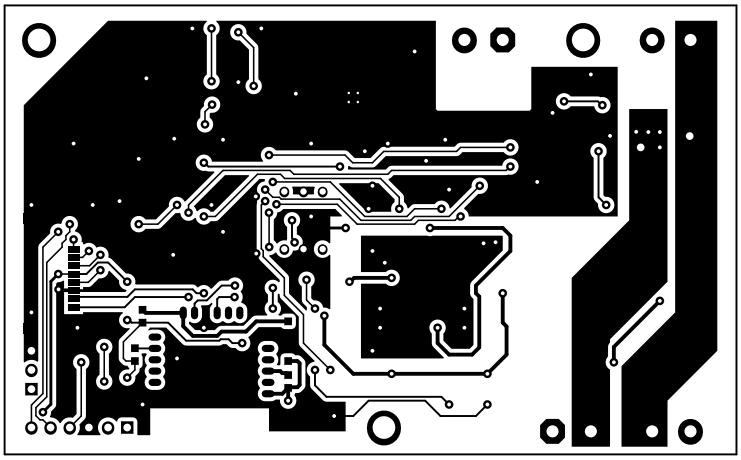

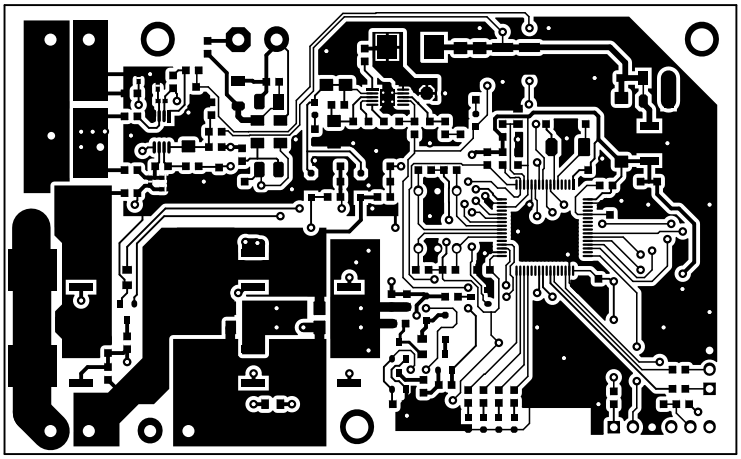

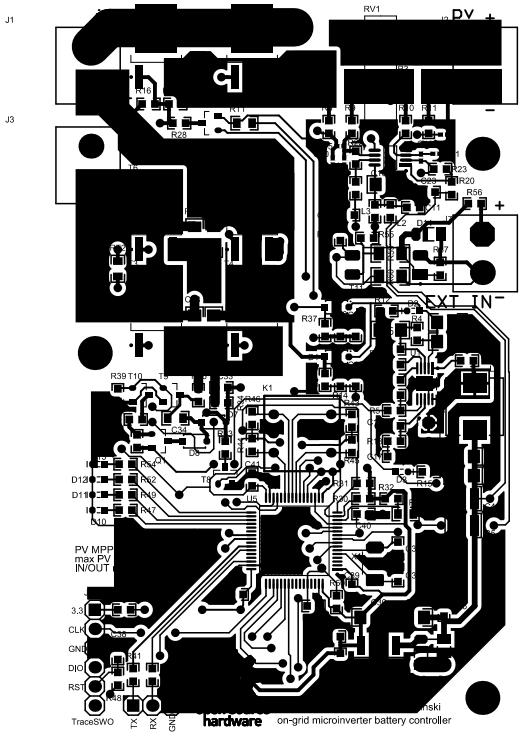
J1
J3
RV1
PV +
PV -
EXT IN-
R56
R23
R20
R37
R39
T10
K1
D12
D11
D10
PV MPP
max PV
IN/OUT
3.3
CLK
GND
DIO
RST
TraceSWO
TX
RX
GND
hardware
on-grid microinverter battery controller

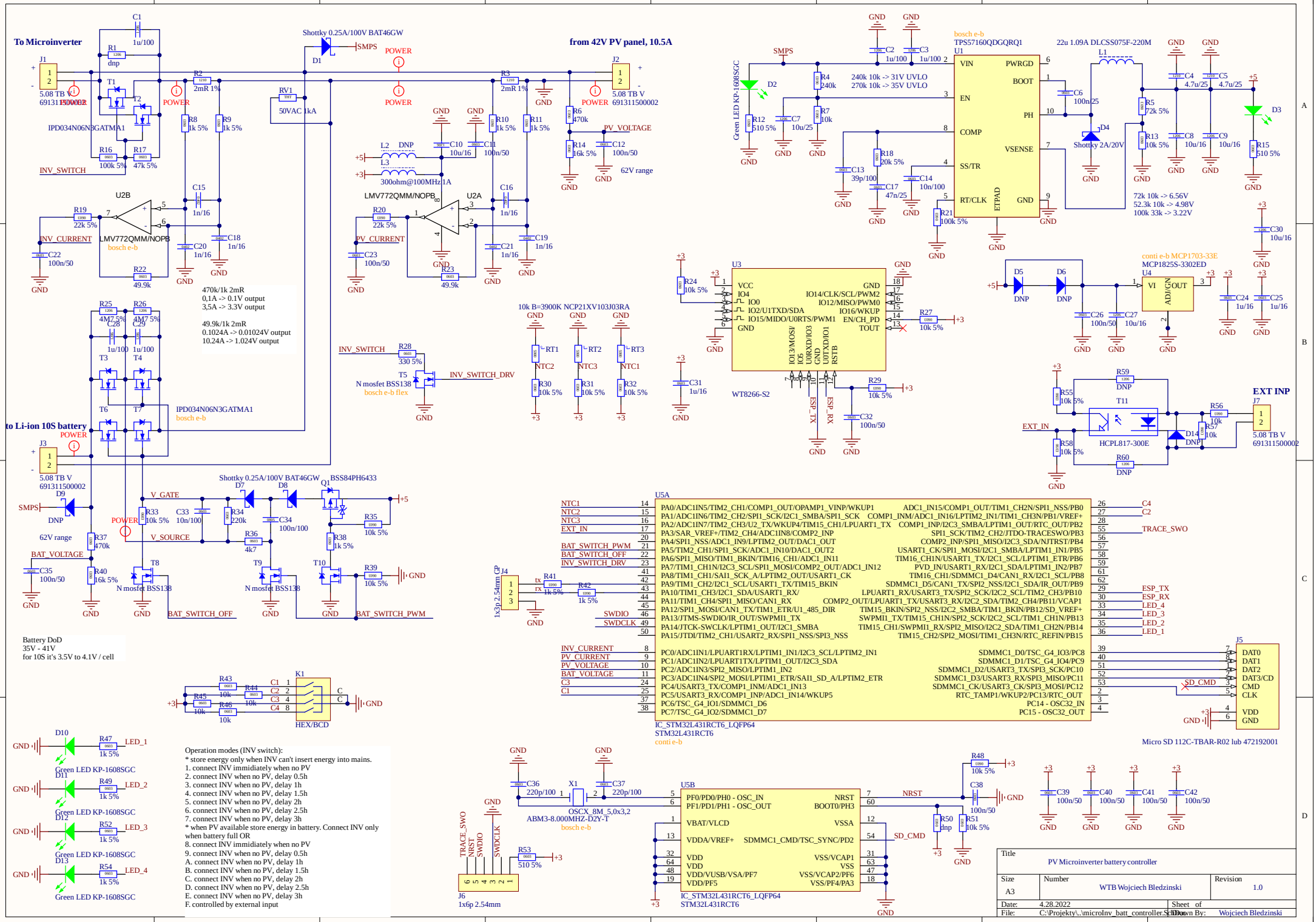
To Microinverter
from 42V PV panel, 10.5A
to Li-ion 10S battery
Shottky 0.25A/100V BAT46GW
IPD034N06N3GATMA1
LMV772QMM/NOPB
bosch e-b
INV_SWITCH
INV_CURRENT
PV_CURRENT
PV_VOLTAGE
BAT_VOLTAGE
BAT_SWITCH_OFF
BAT_SWITCH_PWM
INV_SWITCH_DRV
N mosfet BSS138
bosch e-b flex
300ohm@100MHz 1A
50VAC 1kA
62V range
470k/1k 2mR
0,1A -> 0.1V output
3,5A -> 3.3V output
49.9k/1k 2mR
0.1024A -> 0.01024V output
10.24A -> 1.024V output
Battery DoD
35V - 41V
for 10S it's 3.5V to 4.1V / cell
Green LED KP-1608SGC
HEX/BCD
Operation modes (INV switch):
* store energy only when INV can't insert energy into mains.
1. connect INV immidiately when no PV
2. connect INV when no PV, delay 0.5h
3. connect INV when no PV, delay 1h
4. connect INV when no PV, delay 1.5h
5. connect INV when no PV, delay 2h
6. connect INV when no PV, delay 2.5h
7. connect INV when no PV, delay 3h
* when PV available store energy in battery. Connect INV only when battery full OR
8. connect INV immidiately when no PV
9. connect INV when no PV, delay 0.5h
A. connect INV when no PV, delay 1h
B. connect INV when no PV, delay 1.5h
C. connect INV when no PV, delay 2h
D. connect INV when no PV, delay 2.5h
E. connect INV when no PV, delay 3h
F. controlled by external input
TPS57160QDGQRQ1
22u 1.09A DLCSS075F-220M
240k 10k -> 31V UVLO
270k 10k -> 35V UVLO
72k 10k -> 6.56V
52.3k 10k -> 4.98V
100k 33k -> 3.22V
WT8266-S2
MCP1825S-3302ED
conti e-b MCP1703-33E
HCPL817-300E
EXT INP
EXT_IN
IC_STM32L431RCT6_LQFP64
STM32L431RCT6
conti e-b
Micro SD 112C-TBAR-R02 lub 472192001
OSCX_8M_5,0x3,2
ABM3-8.000MHZ-D2Y-T
1x6p 2.54mm
Title
PV Microinverter battery controller
Size
A3
Number
WTB Wojciech Bledzinski
Revision
1.0
Date:
4.28.2022
Sheet of
File:
C:\Projekty\..\microInv_batt_controller.SchDoc
Drawn By:
Wojciech Bledzinski

Comment	Description	Designator	Footprint	LibRef	Quantity
1u/100	X7R chip capacitor	C1, C2, C3, C28, C29	CAP_1206	CAP_B_1u_100_1206_X7R	5
4.7u/25	X5R chip capacitor	C4, C5	CAP_1210	CAP_B_4.7u_25_1210_X5R	2
100n/25	X7R chip capacitor	C6	CAP_0603	CAP_B_100n_50_0603_X7R	1
10u/25	X5R chip capacitor	C7	CAP_1206	CAP_B_10u_25_1206_X5R	1
10u/16	X7R chip capacitor	C8, C9, C10, C27, C30	CAP_1206	CAP_B_10u_16_1206_X7R	5
100n/50	X7R chip capacitor	C11, C12, C22, C23, C26, C32, C35, C38, C39, C40, C41, C42	CAP_0603	CAP_B_100n_50_0603_X7R	12
39p/100	COG chip capacitor	C13	CAP_0603	CAP_B_39p_100_0603_COG	1
10n/100	X7R chip capacitor	C14, C33	CAP_0603	CAP_B_10n_100_0603_X7R	2
1n/16	X7R chip capacitor	C15, C16, C18, C19, C20, C21	CAP_0402_HD_IPC	CAP_B_1n_16_0402_X7R	6
47n/25	X7R chip capacitor	C17	CAP_0603	CAP_B_47n_25_0603_X7R	1
1u/16	X7R chip capacitor	C24, C25, C31	CAP_0603	CAP_B_1u_16_0603_X7R	3
100n/100	X7R chip capacitor	C34	CAP_0805	CAP_B_100n_100_0805_X7R	1
220p/100	COG chip capacitor	C36, C37	CAP_0603	CAP_B_220p_100_0603_COG	2
Shottky 0.25A/100V BAT46GW	Shottky Diode trr 4ns 0,43V @ 0.05A 0.75V@0.25A	D1, D7, D8	SOD_123	D_0.25_100_BAT46GWX	3
Green LED KP-1608SGC	Diode LED SMD 2.2V @ 20mA 15mcd	D2, D3, D10, D11, D12, D13	LED_0603_GREEN	D_LED_0603_GREEN	6
Shottky 2A/20V	Shottky Diode 0,5V @ 2A SMA 200pF	D4	SMA_DO-214AC	D_2A_20_B220A	1
DNP		D5, D6, D14	D_MINIMELF	D_LL4148_MMELF	3
DNP	Shottky Diode trr 4ns 0,43V @ 0.05A 0.75V@0.25A	D9	SOD_123	D_0.25_100_BAT46GWX	1
5.08 TB V	THT 5,08mm, WE 691311500002 (rev1), NINIGI , MLX	J1, J2, J3, J7	CON_1x2_5.08TB	CON_1x2_TB_5.08V	4
1x3p 2.54mm GP	THT 2,54 goldpin	J4	CON_PIN1x3_THT	CON_1x3_GP_THT	1
Micro SD 112C-TBAR-R02 lub 472192001	Micro SD connector SMD, ATTEND 112C-TBAR-R02; MOLEX 472192001	J5	112C_TXAR_R01	CON_MicroSD	1
1x6p 2.54mm	THT 2,54 goldpin	J6	CON_PIN1x6_THT	CON_1x6_GP_THT	1
HEX/BCD	Zadajnik kodu	K1	MECH_SW_HEXBCD	MECH_SW_HEXBCD	1
22u 1.09A DLCS075F-220M	shielded power inductor 1.09A Rdc=0,12	L1	IND_DER0705	IND_22u_1.09A_DER0705-22	1
DNP	2A Rdc=0,15 SRF 250MHz, Resistor 0603 5% 0,1W	L2, R50	RES_0603	IND_FB_300R_0603, RES_10k_5p_0603	2
300ohm@100MHz 1A	2A Rdc=0,15 SRF 250MHz	L3	RES_0603	IND_FB_300R_0603	1
BSS84PH6433	50V 130mA P Mosfet	Q1	SOT23-3	T_BSS84	1
dnp	Resistor 1206 5% 0,25W	R1, R59, R60	RES_1206	RES_0R_5p_1206	3
2mR 1%	Resistor 1210 5% 0,5W	R2, R3	RES_1210	RES_2R2_5p_1210	2
240k	Resistor 0603 5% 0,1W	R4	RES_0603	RES_105k_5p_0603	1
72k 5%	Resistor 0603 5% 0,1W	R5	RES_0603	RES_62k_5p_0603	1
470k	Resistor 0603 5% 0,1W	R6, R37	RES_0603	RES_1k_5p_0603	2
10k	Resistor 0603 5% 0,1W	R7, R43, R44, R45, R46, R56, R57	RES_0603	RES_16k_5p_0603	7
1k 5%	Resistor 0603 5% 0,1W	R8, R9, R10, R11, R38, R41, R42, R47, R49, R52, R54	RES_0603	RES_1k_5p_0603	11
510 5%	Resistor 0603 5% 0,1W	R12, R15, R53	RES_0603	RES_510_5p_0603	3
10k 5%	Resistor 0603 5% 0,1W	R13, R24, R27, R29, R30, R31, R32, R33, R35, R39, R48, R51, R55, R58	RES_0603	RES_10k_5p_0603	14
16k 5%	Resistor 0603 5% 0,1W	R14, R40	RES_0603	RES_16k_5p_0603	2
100k 5%	Resistor 0603 5% 0,1W	R16, R21	RES_0603	RES_100k_5p_0603	2
47k 5%	Resistor 0603 5% 0,1W	R17	RES_0603	RES_47k_5p_0603	1
20k 5%	Resistor 0603 5% 0,1W	R18	RES_0603	RES_20k_5p_0603	1
22k 5%	Resistor 0603 5% 0,1W	R19, R20	RES_0603	RES_22k_5p_0603	2
49.9k	Resistor 0603 5% 0,1W	R22, R23	RES_0603	RES_1k_5p_0603	2
4M7 5%	Resistor 1206 5% 0,25W	R25, R26	RES_1206	RES_4M7_5p_1206	2
330 5%	Resistor 0603 5% 0,1W	R28	RES_0603	RES_330R_5p_0603	1
220k	Resistor 0603 5% 0,1W	R34	RES_0603	RES_100k_5p_0603	1
4k7	Resistor 0603 5% 0,1W	R36	RES_0603	RES_100k_5p_0603	1
10k B=3900K NCP21XV103J03RA	TERMISTOR, NTC, 0805 3900K, permissive current 0.4mA	RT1, RT2, RT3	RES_0805	REST_10k_5p_0805	3
50VAC 1kA	warystor S14 30VAC 38VDC 1kA 8J@2ms	RV1	RES_VAR_S14	RESV_38V_1kA_THT	1
IPD034N06N3GATMA1	60V N-Mosfet 100A 60V 3.54mohm	T1, T2, T3, T4, T6, T7	DPAK_369C_issue D	T_IPD034N06N3	6
N mosfet BSS138	50V 0.3A N mosfet Rdson 6ohm @UGS=4,5V Qg=2.5nC	T5, T8, T9, T10	SOT23-3	T_BSS138	4
HCPL817-300E	HCPL817-300E 'D' ctr 50-600% if 20ma ic 30ma vce 70V vr 4v	T11	HCPL-817	T_HCPL817-300E	1
TPS57160QDGQRQ1	116uA quescient current	U1	MSOP10_DQG_S_PDSO_G10	IC_TPS57160QDGQRQ1	1
LMV772QMM/NOPB	LowOffset,LowNoise,RROOperationalAmplifier	U2	MSOP8_3x3_846A-D-01	IC_LMV772QMM	1
WT8266-S2		U3	MOD_WT8266-S2	MOD_WT8266-S2	1
MCP18255-3302ED	LDO=210mV 6V DC max, Iq 120uA, Cout 1u ceramic	U4	sot223	IC_MCP18255-3.3_SOT223	1
IC_STM32L431RCT6_LQFP64	LQFP64, 10x10mm	U5	LQFP64_10x10	IC_STM32L431RCT6_LQFP64	1
OSCX_8M_5.0x3.2	SMD 5.0x3.2mm xtal drive 100uW max; ESR 150 ohm	X1	X_5.0X3.2	OSCX_8M_5.0x3.2	1