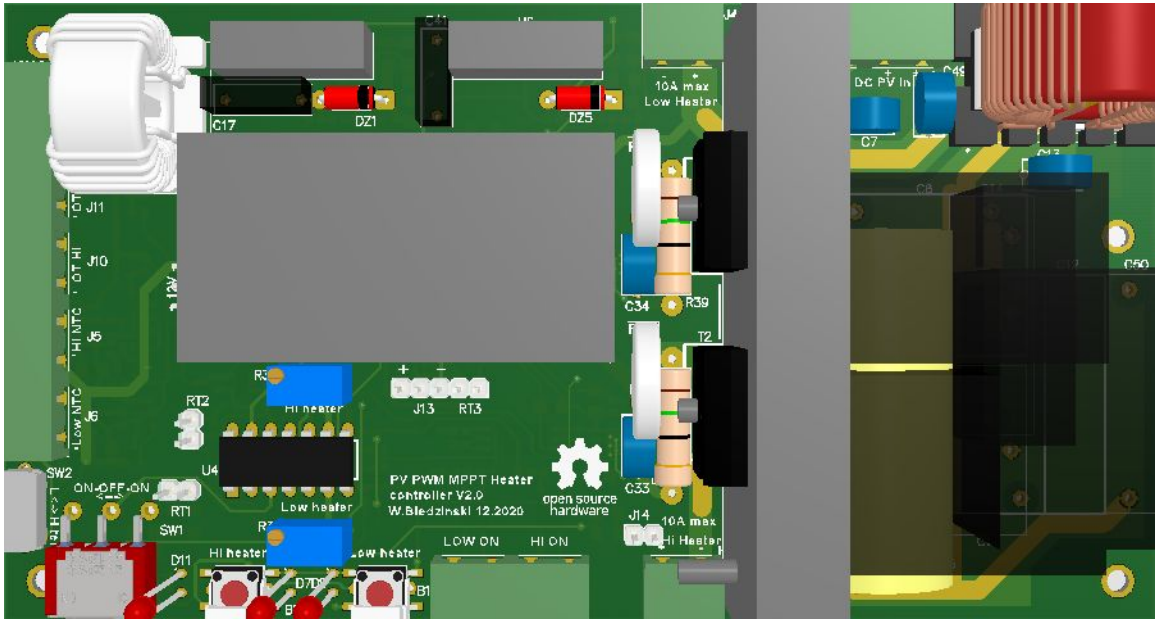
C17
DZ1
DZ5
10A max
Low Heater
DC PV In
C7
J11
J10
J5
J6
12V
C34
R39
T2
R3
RT2
HI heater
J13
RT3
U4
SW2
ON-OFF-ON
RT1
SW1
Low heater
PV PWM MPPT Heater
controller V2.0
W.Bledzinski 12.2020
open source
hardware
C33
J14
10A max
Hi Heater
R7
HI heater
Low heater
LOW ON
HI ON
D11
B1
C60

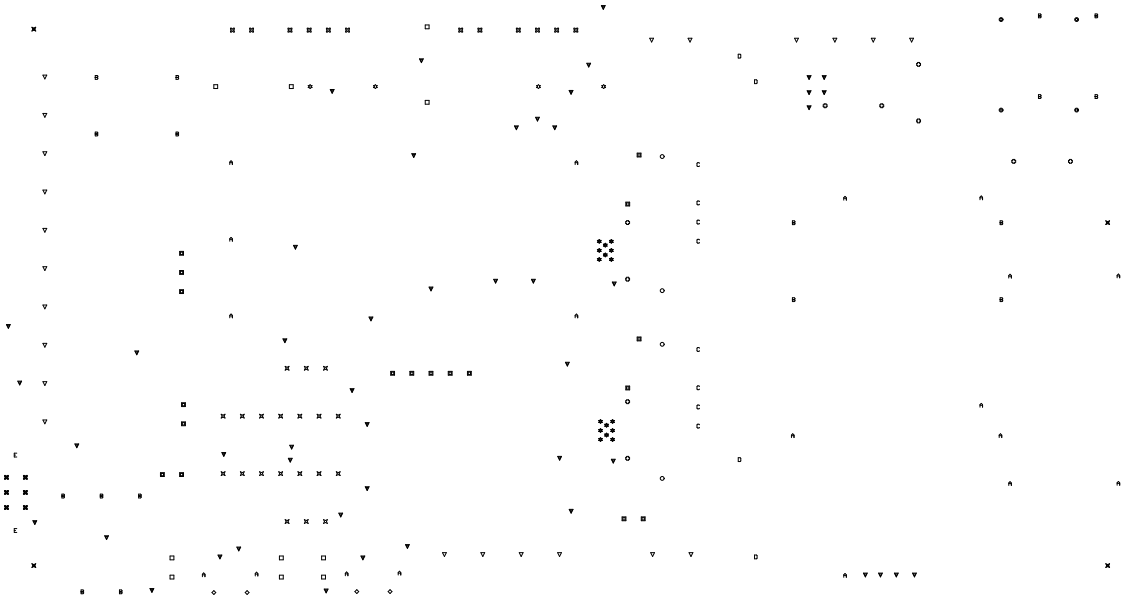

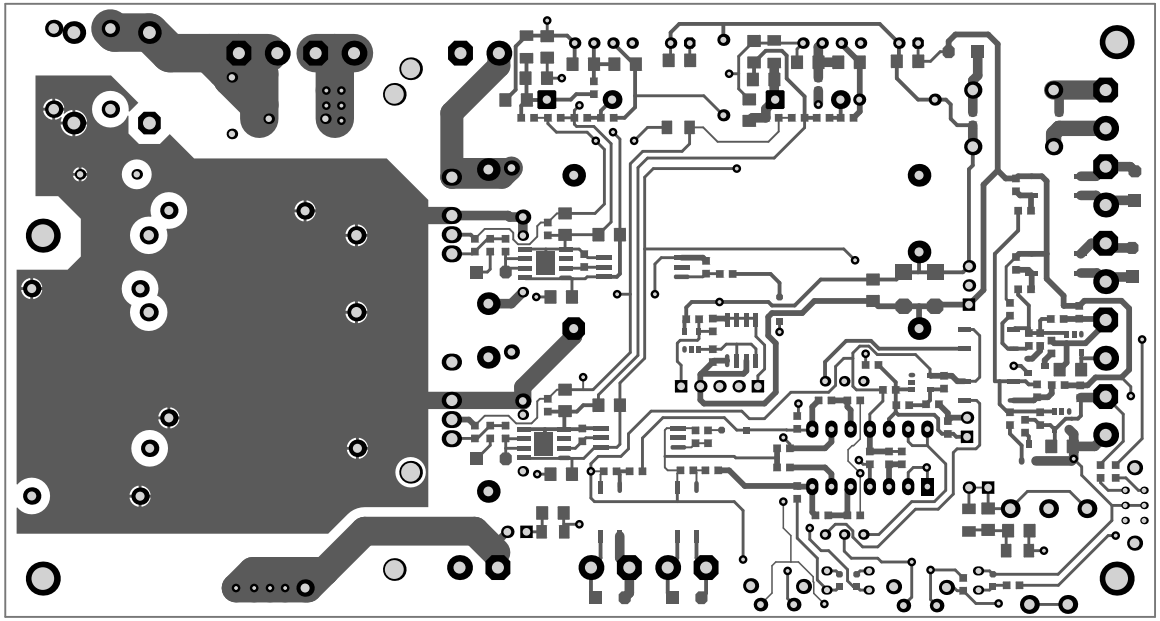

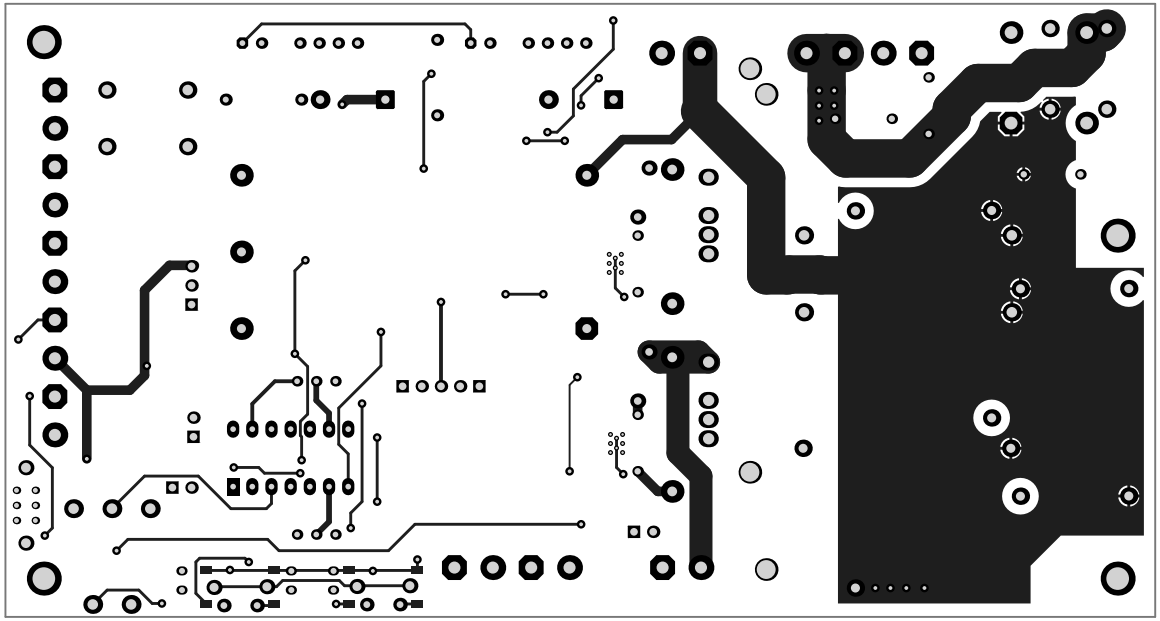

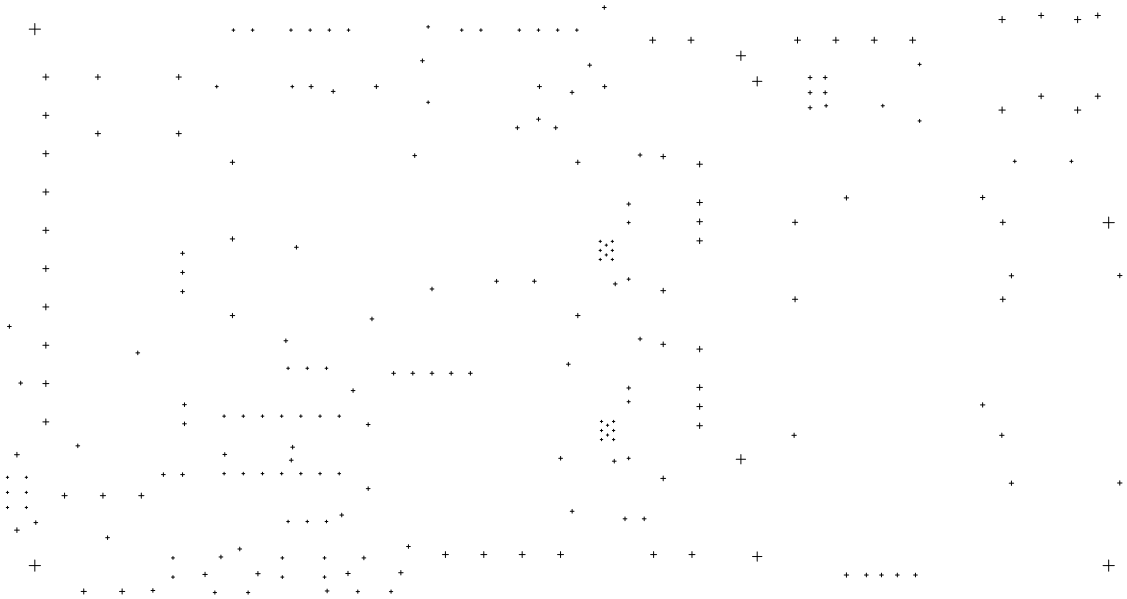

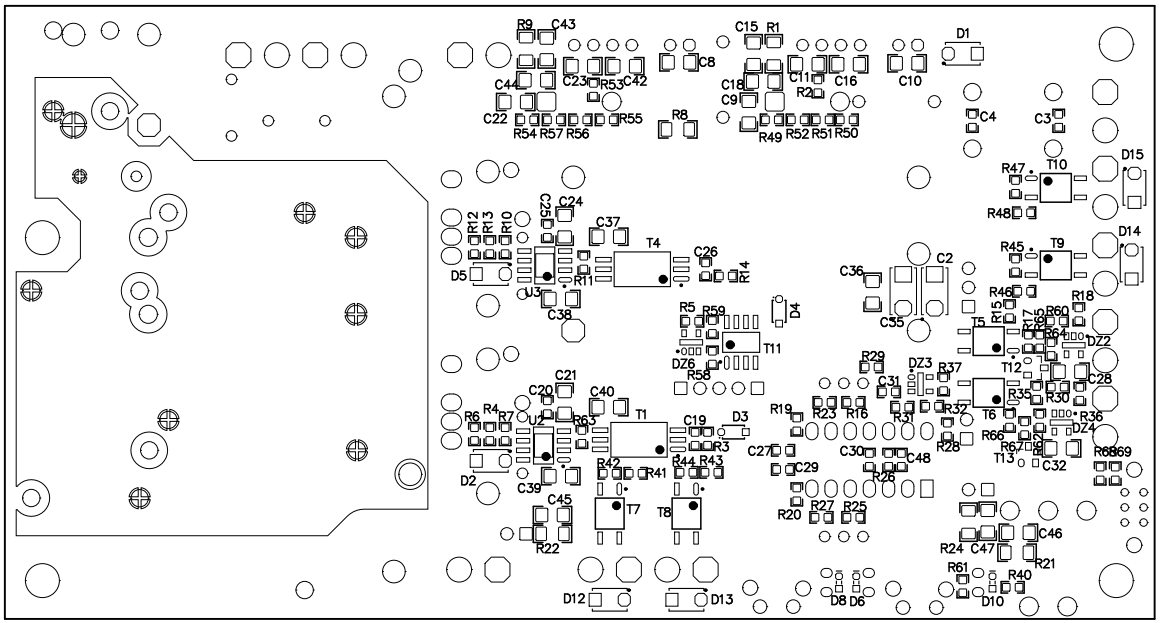
R9
C43
C15
R1
D1
C8
C44
C23
R53
C42
C18
C11
C16
C10
C9
R2
C22
R54
R57
R56
R55
R8
R49
R52
R51
R50
C4
C3
D15
R47
T10
R48
C24
C37
R12
R13
R10
C25
T4
C26
R14
D14
R45
T9
D5
R11
U3
C38
C36
C2
C35
R46
R18
R5
R59
D4
R60
R17
R64
T5
DZ2
T11
DZ6
R58
R29
DZ3
R37
T12
C28
C21
C31
R35
R30
C20
C40
R4
R7
R6
U2
R63
T1
C19
D3
R19
R23
R16
R31
R32
T6
R36
DZ4
R66
R67
R28
T13
C32
R68
R69
C27
R3
C30
C48
R44
R43
R42
R41
C29
R26
D2
C39
C45
T7
T8
R20
R27
R25
R22
C46
R24
C47
R21
R61
R40
D12
D13
D8
D6
D10

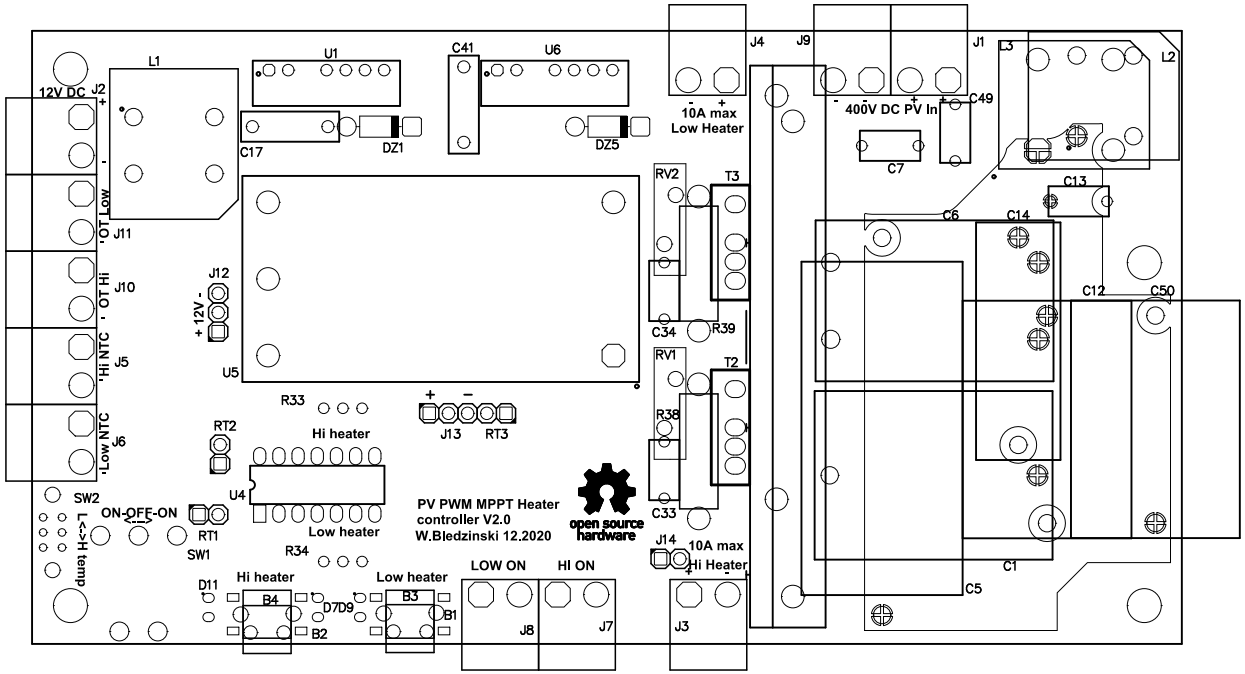
12V DC
J2
L1
U1
C41
U6
J4
J9
J1
L3
L2
C17
DZ1
DZ5
10A max
Low Heater
400V DC PV In
C49
C7
RV2
T3
C13
C6
C14
J11
OT Low
J10
OT Hi
J12
+ 12V -
C12
C50
C34
R39
J5
Hi NTC
U5
RV1
T2
R33
J13
RT3
R38
RT2
Hi heater
J6
Low NTC
U4
SW2
ON-OFF-ON
RT1
Low heater
PV PWM MPPT Heater
controller V2.0
W.Bledzinski 12.2020
open source
hardware
C33
J14
10A max
Hi Heater
L<->H temp
SW1
R34
C1
LOW ON
HI ON
Hi heater
Low heater
D11
B4
D7D9
B3
B1
B2
J8
J7
J3
C5

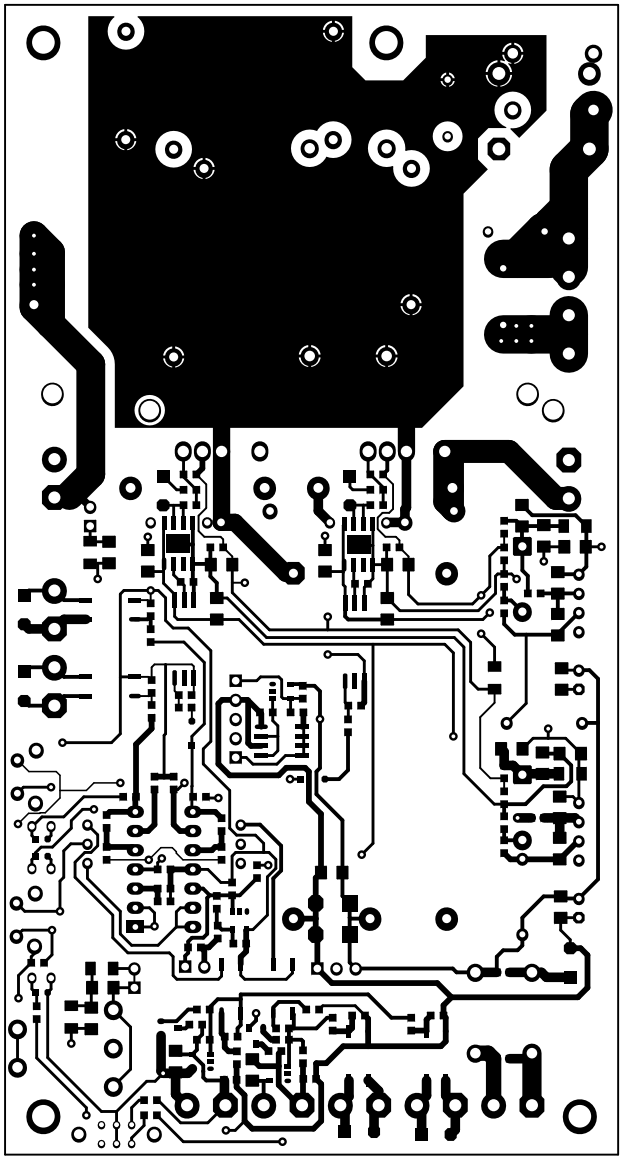

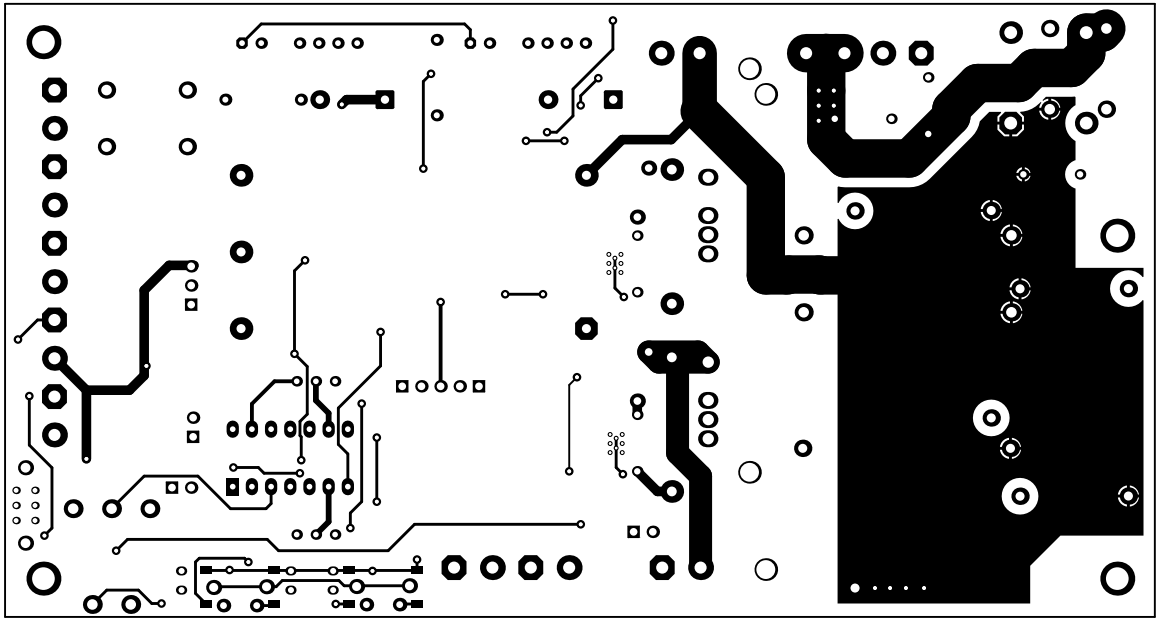

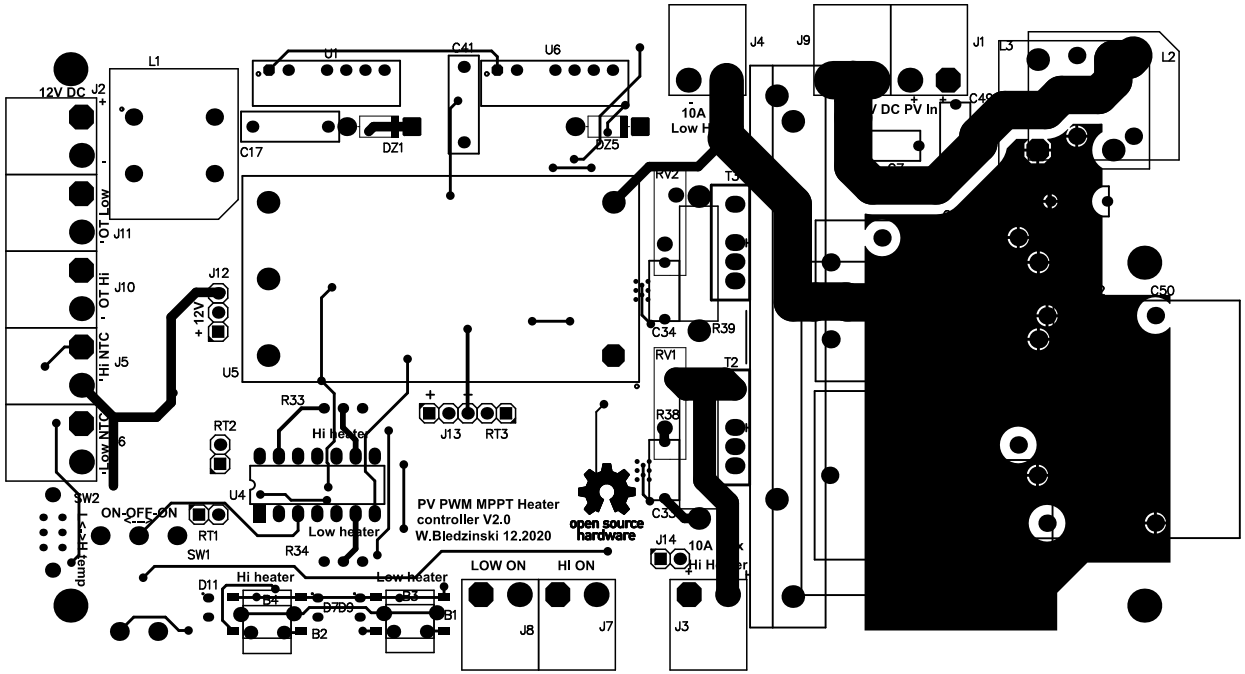
12V DC
J2
L1
U1
C41
U6
J4
J9
J1
L3
L2
C49
10A
Low H
V DC PV In
C17
DZ1
DZ5
RV2
T3
J11
OT Low
J10
OT Hi
J12
+ 12V
C50
C34
R39
Hi NTC
J5
U5
RV1
T2
R33
Hi heater
J13
RT3
R38
RT2
Low NTC
J6
U4
SW2
ON-OFF-ON
RT1
Low heater
PV PWM MPPT Heater
controller V2.0
W.Bledzinski 12.2020
open source
hardware
C33
J14
10A
Hi H
R34
SW1
Hi heater
Low heater
LOW ON
HI ON
D11
B4
D7D9
B3
B1
B2
J8
J7
J3
Lamp

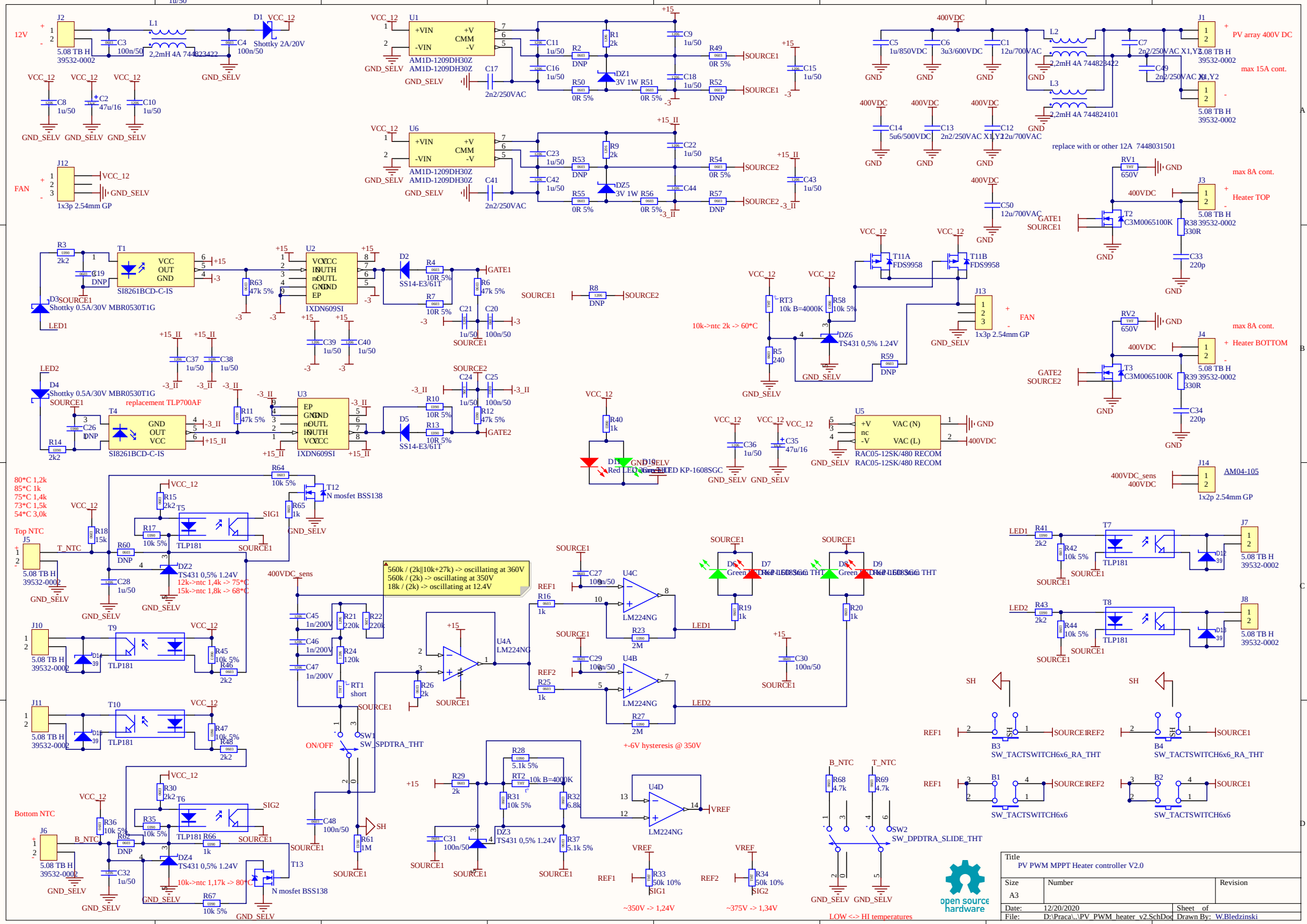
12V
J2
5.08 TB H
39532-0002
L1
2,2mH 4A 744823422
D1 VCC_12
Shottky 2A/20V
GND_SELV
FAN
J12
1x3p 2.54mm GP
U1
AM1D-1209DH30Z
U6
AM1D-1209DH30Z
2n2/250VAC
DZ1
3V 1W
DZ5
3V 1W
SOURCE1
SOURCE2
400VDC
PV array 400V DC
max 15A cont.
L2
L3
2,2mH 4A 744824101
replace with or other 12A 7448031501
max 8A cont.
Heater TOP
Heater BOTTOM
T2
C3M0065100K
T3
C3M0065100K
T11A
FDS9958
T11B
FDS9958
RAC05-12SK/480 RECOM
AM04-105
1x2p 2.54mm GP
SI8261BCD-C-IS
IXDN609SI
Shottky 0.5A/30V MBR0530T1G
replacement TLP700AF
10k->ntc 2k -> 60*C
80*C 1,2k
85*C 1k
75*C 1,5k
73*C 1,5k
54*C 3,0k
Top NTC
Bottom NTC
12k->ntc 1,4k -> 75*C
15k->ntc 1,8k -> 68*C
10k->ntc 1,17k -> 80*C
TLP181
N mosfet BSS138
560k / (2k||10k+27k) -> oscillating at 360V
560k / (2k) -> oscillating at 350V
18k / (2k) -> oscillating at 12.4V
LM224NG
+-6V hysteresis @ 350V
SW_SPDTRA_THT
SW_TACTSWITCH6x6_RA_THT
SW_TACTSWITCH6x6
SW_DPDTRA_SLIDE_THT
~350V -> 1,24V
~375V -> 1,34V
LOW <-> HI temperatures
open source hardware
Title
PV PWM MPPT Heater controller V2.0
Size
A3
Number
Revision
Date: 12/20/2020
Sheet of
File: D:\Praca\..\PV_PWM_heater_v2.SchDoc
Drawn By: W.Bledzinski

Comment	Description	Designator	Footprint	LibRef	Quantity
SW_TACTSWITCH6x6	SE PUSHBUTTON	B1, B2	SW_TACT6x6	SW_TACTSWITCH6x6	2
SW_TACTSWITCH6x6_RA_THT	SE PUSHBUTTON	B3, B4	SW_TACT6x6_RA	SW_TACTSWITCH6x6_RA_THT	2
12u/700VAC	poliester capacitor THT	C1, C12, C50	CAP_THT27.5mm	CAP_B_12u_700_THT	3
47u/16	ESR 1.2R 10VDC at 125stC	C2, C35	TAIC	CAP_E_47u_16_TAIC	2
100n/50	X7R chip capacitor	C3, C4, C20, C25, C27, C29, C30, C31, C48	CAP_0603	CAP_B_100n_50_0603_X7R	9
1u/850VDC	poliester capacitor THT, esr 5mR, 9A/140A pk	C5	CAP_AXIAL50X20mm	CAP_B_1u_850_THT	1
3u3/600VDC	poliester capacitor THT, esr 2.4mR, 25A/342A pk 350VAC	C6	CAP_THT27.5X22mm	CAP_B_3u3_600_THT	1
2n2/250VAC X1,Y2	poliester capacitor THT X1 Y2, Y5V	C7, C13, C49	CAP_THT7.5mm	CAP_B_2n2_250_X1Y2_THT	3
1u/50	X7R chip capacitor	C8, C9, C10, C11, C15, C16, C18, C21, C22, C23, C24, C28, C32, C36, C37, C38, C39, C40, C42, C43, C44	CAP_1206	CAP_B_1u_50_1206_X7R	21
5u6/500VDC	poliester capacitor THT, esr 13mR,	C14	CAP_THT27.5X11mm	CAP_B_5u6_500_THT	1
2n2/250VAC	poliester capacitor THT Y2	C17, C41	CAP_THT10mm	CAP_B_2n2_250_THT	2
DNP	X7R chip capacitor	C19, C26	CAP_0603	CAP_B_100n_50_0603_X7R	2
220p	poliester capacitor THT X1 Y2, Y5V	C33, C34	CAP_THT7.5mm	CAP_B_2n2_250_X1Y2_THT	2
1n/200V	C0G chip capacitor	C45, C46, C47	CAP_1206	CAP_B_100n_50_1206_C0G	3
Shottky 2A/20V	Shottky Diode 0.5V @ 2A SMA 200pF	D1	SMA_DO-214AC	D_2A_20_B220A	1
SS14-E3/61T		D2, D5	SMA_DO-214AC	D_SS14	2
Shottky 0.5A/30V MBR0530T1G	Shottky Diode trr 4ns 0.43V @ 0.5A 0.37V@0.1A	D3, D4	SOD_123	D_0.5A_30_MBR0530T1G	2
Green LED KP-1608SGC	Diode LED SMD 2.2V @ 20mA 15mcd	D6, D8, D10	LED_0603_GREEN	D_LED_0603_GREEN	3
Red LED 3mm THT	Diode LED THT	D7, D9, D11	LED_3MM	D_LED3_THT_RED	3
39	transil jednostronny	D12, D13, D14, D15	SMA_DO-214AC	D_TR_UNI_SMA6TY_39V	4
3V 1W		DZ1, DZ5	D_DO-15_DO-204AC	D_1W_20_ZENER	2
TS431 0.5% 1.24V	0.5% 1.24V vref	DZ2, DZ3, DZ4, DZ6	SOT23_5_DBV_R-PDSO-G5	D_TS431BILT	4
5.08 TB H	THT 5,08mm, WE 691312510002, NINIGI TBG-5-KB-2P/GN, MLX 395320002	J1, J2, J3, J4, J5, J6, J7, J8, J9, J10, J11	CON_1x2_5.08TBRA	CON_1x2_TB_5.08H	11
1x3p 2.54mm GP	THT 2.54 goldpin	J12, J13	CON_PIN1x3_THT	CON_1x3_GP_THT	2
1x2p 2.54mm GP	THT 2.54 goldpin	J14	CON_PIN1x2_THT	CON_1x2_GP_THT	1
2.2mH 4A 744823422	2x2,2mH 40dB 1MHz 4A 250VAC Rdc=2x0,03 SRF1MHz	L1, L2	IND_WE-CMB-M	IND_WE-CMB_2.2mH_4A_THT	2
2.2mH 4A 744824101	2x2.2mH 30dB 1MHz 10A 250VAC Rdc=2x0,007 SRF1MHz	L3	IND_WE-CMB-I	IND_WE-CMB_2.2mH_10A_THT	1
2k	Resistor 1206 5% 0.25W	R1, R9	RES_1206	RES_510R_5p_1206	2
DNP	0603 ,1W, 0603 ,1W, 0603 ,1W, 0603 ,1W, Resistor 0603 5% 0,1W, Resistor 0603 5% 0,1W, Resistor 0603 5% 0,1W	R2, R52, R53, R57, R59, R60, R62	RES_0603	RES_0R_5p_0603, RES_0R_5p_0603, RES_0R_5p_0603, RES_0R_5p_0603, RES_3k_5p_0603, RES_3k_5p_0603, RES_3k_5p_0603	7
2k2	Resistor 0603 5% 0.1W	R3, R14, R15, R30, R41, R43, R46, R48	RES_0603	RES_3k_5p_0603	8
10R 5%	Resistor 0603 5% 0.1W	R4, R7, R10, R13	RES_0603	RES_10R_5p_0603	4
240	Resistor 0603 5% 0.1W	R5	RES_0603	RES_10R_5p_0603	1
47k 5%	Resistor 0603 5% 0.1W	R6, R11, R12, R63	RES_0603	RES_47k_5p_0603	4
DNP	Resistor 1206 5% 0.25W	R8	RES_1206	RES_0R_5p_1206	1
1k	Resistor 0603 5% 0.1W	R16, R19, R20, R25, R40, R65, R66	RES_0603	RES_3k_5p_0603	7
10k 5%	Resistor 0603 5% 0.1W	R17, R31, R35, R36, R42, R44, R45, R47, R58, R64, R67	RES_0603	RES_10k_5p_0603	11
15k	Resistor 0603 5% 0.1W	R18	RES_0603	RES_10k_5p_0603	1
220k	Resistor 1206 5% 0.25W	R21, R22	RES_1206	RES_510R_5p_1206	2
2M	Resistor 0603 5% 0.1W	R23, R27	RES_0603	RES_3k_5p_0603	2
120k	Resistor 1206 5% 0.25W	R24	RES_1206	RES_510R_5p_1206	1
2k	Resistor 0603 5% 0.1W	R26, R29	RES_0603	RES_3k_5p_0603	2
5.1k 5%	Resistor 0603 5% 0.1W	R28, R37	RES_0603	RES_5.1k_5p_0603	2
6.8k	Resistor 0603 5% 0.1W	R32	RES_0603	RES_10k_5p_0603	1
50k 10%	Pot 500mW wieloobrotowy	R33, R34	RES_PV36	RESV_50k_10p_THT	2
330R	Resistor 2W 5% THT	R38, R39	RES_AXIAL2W	RES_330R_5p_2W	2
0R 5%	0603 ,1W	R49, R50, R51, R54, R55, R56	RES_0603	RES_0R_5p_0603	6
1M	Resistor 0603 5% 0.1W	R61	RES_0603	RES_3k_5p_0603	1
4.7k	Resistor 0603 5% 0.1W	R68, R69	RES_0603	RES_10k_5p_0603	2
short	TERMISTOR, NTC, 4000K ¶ 6.5mm	RT1	CON_PIN1x2_THT	REST_10k_10p_THT	1
10k B=4000K	TERMISTOR, NTC, 4000K ¶ 6.5mm	RT2, RT3	CON_PIN1x2_THT	REST_10k_10p_THT	2
650V	varystor S14 30VAC 38VDC 1kA 9J@2ms	RV1, RV2	RES_VAR_S14	RESV_38V_1kA_THT	2
SW_SPDTRA_THT		SW1	SW_SPDT_RA	SW_SPDTRA_THT	1
SW_DPDTRA_SLIDE_THT		SW2	SW_DPDT_SLIDE	SW_DPDTRA_SLIDE_THT	1
SI8261BCD-C-IS	4.0 A ISOLATED GATE DRIVER 5kV Vdd6.5-30V	T1, T4	SDP6_SOICW6	T_SI8261	2
C3M0065100K	SiC 1kV 35A N mosfet Rdson 0.07@UGS=15V Qg=35nC	T2, T3	TO247-4	T_C3M0065100K_THT	2
TLP181	transoptor CTR Blank 50 600 Blank Y■,YE,G,G■,GR,B,BL,GB Rank Y 50 150 YE, Y■ Rank GR 100 300 GR, G, G■ Rank BL 200 600 BL, B Rank GB 100 600 GB , GR , G, G■, BL , B Rank YH 75 150 Y■ Rank GRL 100 200 G Rank GRH 150 300 G■ Rank BLL 200 400 B If 50mA Ic50mA ICE0 0.1uA@10V	T5, T6, T7, T8, T9, T10	TOSH-11-4C1_N	T_TLP181	6
Value	-60V -2.9A 2x P MOSFET, 135/105mR	T11	SOIC8M	T_FDS9958	1
N mosfet BSS138	50V 0.3A N mosfet Rdson 6ohm @UGS=4.5V Qg=2.5nC	T12, T13	SOT23-3	T_BSS138	2
AM1D-1209DH30Z	SMPS converter +9V and -9V, 1W, 3kV iso	U1, U6	MOD_AIMTEC_AM1D-Z	MOD_AM1D-1209DH30Z_THT	2
IXDN609SI	single 9A High-speed low side gate driver	U2, U3	SOIC8M_PP	IC_IXDN609SI	2
LM224NG	LM224_324_2902_NCV2902-14	U4	DIP14	IC_LM224	1
RAC05-12SK/480 RECOM	SMPS 10W 12V 800mA,	U5	MOD_RAC10-12SK/277	MOD_RAC10-12SK/277_	1