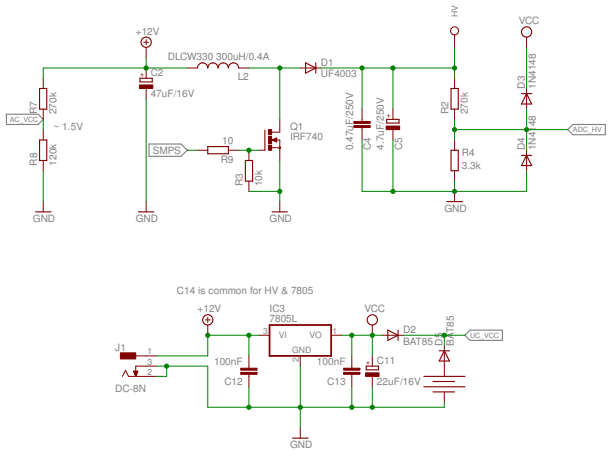

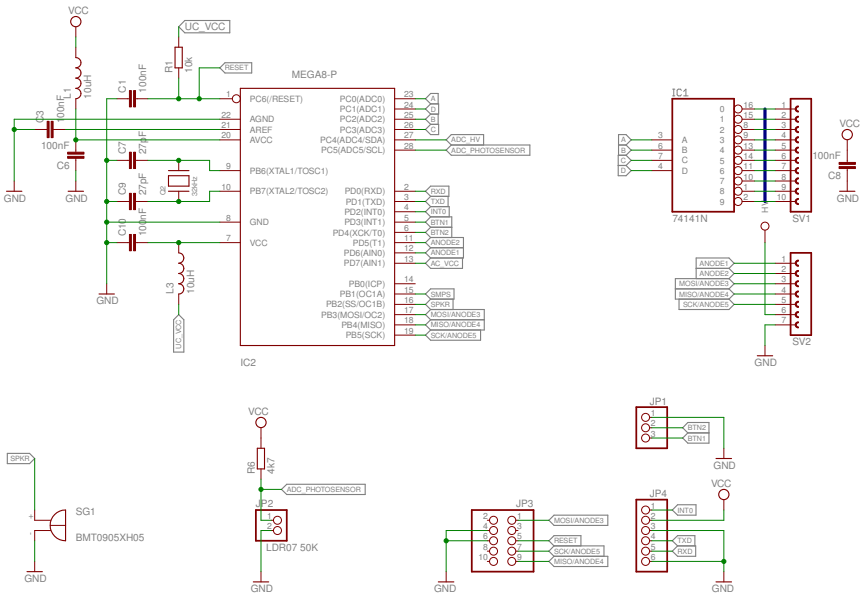

NixieClock
23/08/2016 09:41
Sheet: 1/1

NixieClock
23/08/2016 09:41
Sheet: 1/1