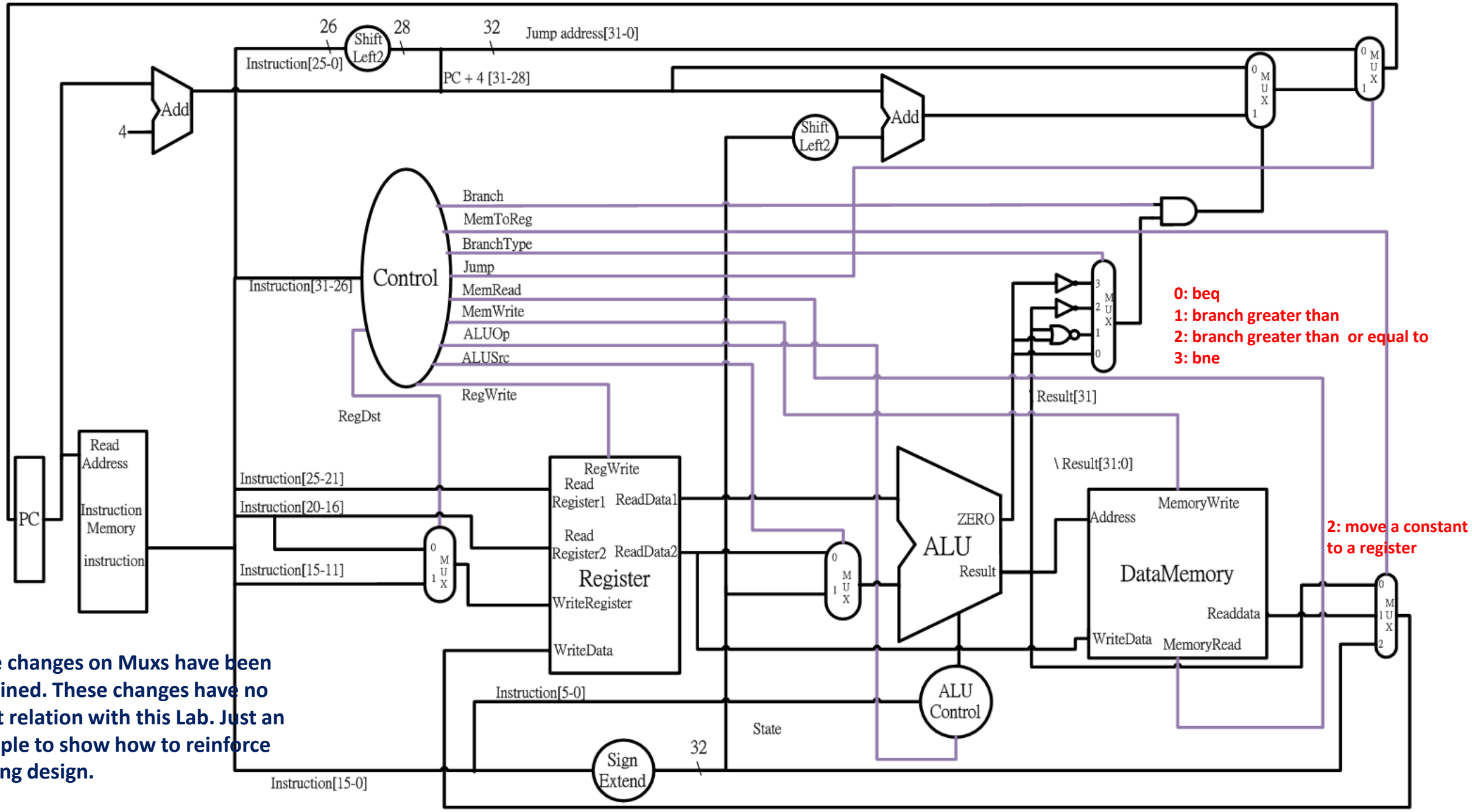

Some changes on Muxs have been explained. These changes have no direct relation with this Lab. Just an example to show how to reinforce existing design.