23071
PRELIMINARY REVIEW SET
02/05/2024

RENOVATIONS & NEW CONSTRUCTION FOR PANCARE - CHIPLEY

1440 Main Street, Chipley, FL 32428

PANCARE

OF FLORIDA , INC.

FOR REVIEW PURPOSES ONLY
DO NOT ORDER PLANS
DAG BLUEINC.COM

PROJECT INDEX:

GENERAL:
G-001 COVER SHEET
LS-101 LIFE SAFETY PLAN

STRUCTURAL SHEETS
S001 FOUNDATION PLAN
S101 FOUNDATION PLAN
S102 ROOF FRAMING PLAN
S201 FOUNDATION DETAILS
S202 STRUCTURAL DETAILS

ARCHITECTURAL SHEETS
A-001 ABBREVIATIONS, SYMBOLS, LEGEND, & FL PRODUCT APPROVAL
AD-101 DEMOLITION PLAN
AD-101.1 DEMOLITION REFLECTED CEILING PLAN
AD-201 DEMOLITION ELEVATIONS
A-100 SITE PLAN
A-101 FLOOR PLAN
A-101.1 DIMENSION PLAN
A-101.2 FINISH PLAN
A-101.3 REFLECTED CEILING PLAN
A-102 ROOF PLAN
A-201 ELEVATIONS
A-301 BUILDING SECTION
A-302 WALL SECTIONS
A-303 PARTITION TYPES
A-401 ENLARGED PLANS
A-402 INTERIOR ELEVATIONS
A-403 INTERIOR ELEVATIONS
A-404 INTERIOR ELEVATIONS
A-501 HEAD, SILL, & JAMB DETAILS
A-600 DOOR SCHEDULE, DOOR & WINDOW ELEVATIONS
A-601 ROOM FINISH SCHEDULE

PLUMBING SHEETS
P101 DOMESTIC WATER & SANITARY WASTE PLUMBING FLOOR PLAN
P102 DENTAL PIPING PLAN
P201 PLUMBING RISERS
P202 PLUMBING NOTES, LEGEND, SCHEDULE, & DETAILS

MECHANICAL SHEETS
M101 HVAC FLOOR PLAN
M201 HVAC SCHEDULES, NOTES, & DETAILS
M202 HVAC DETAILS

ELECTRICAL SHEETS
E001 GENERAL NOTES AND LEGEND
E002 PANEL SCHEDULES
E003 POWER RISER
E100 POWER PLAN - NEW WORK
E101 DENTAL PLAN & DETAILS - NEW WORK
E102 DENTAL PLAN & DETAILS - NEW WORK
E200 LIGHTING PLAN - NEW WORK
ED100 POWER PLAN - DEMOLITION
ED200 LIGHTING PLAN - DEMOLITION

B4 | SHEET INDEX
SCALE: NTS

OWNER:
PanCare of Florida,INC.
403 E. 11th Street
Panama City, FL 32401
Phone: (850) 769-1551

Contact: Robert Thompson
Email: rthompson@pancarefl.org

ARCHITECT:
DAG Architects, Inc.
455 Harrison Ave., Suite I
Panama City, FL 32401
Phone: (850) 387-1671

PIC: Owen Gipson, AIA
Email: ogipson@dagarchitects.com

MECHANICAL
Johnson-Peaden Engineering Inc.
1399M Jenks Ave.
Panama city,FL 32401
Phone: (850) 215-4068

PIC: Jon Peaden, PE
Email: j.peaden@johnsonpeaden.com

STRUCTURAL
Kever McKee
1624 Metropolitan Boulevard, Suite A
Tallahassee, FL 32308
Phone: (850) 727-5367

PIC: Brian E. Kever, PE
Email: bkever@kevermckee.com

ELECTRICAL:
Watford Engineering
4452 Clinton Street
Marianna, FL 32446
Phone: (850) 526-3447

PIC: Anthony L. Davis, PE
Email: anthony@watford-engineering.com

A1 | Project Teams and Discipline Allocation
SCALE: NTS

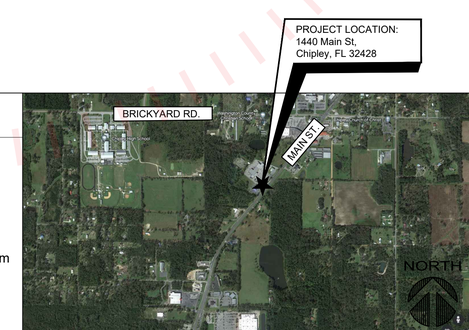

A3 | Project Location Map
SCALE: NTS

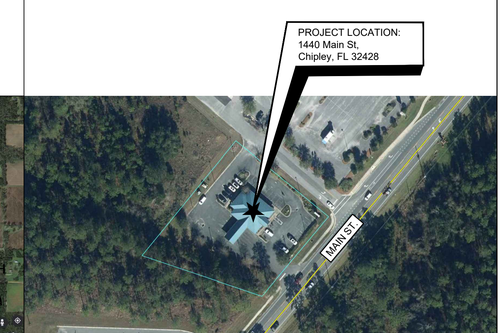

A4 | Existing Building Image
SCALE: NTS

© 2021 DAG ARCHITECTS, INC. ALL RIGHTS RESERVED NO PART OF THIS DOCUMENT MAY BE COPIED, REPRODUCED OR TRANSMITTED BY ANY MEANS WITHOUT WRITTEN PERMISSION OF DAG ARCHITECTS, INC. THESE DRAWINGS AND SPECIFICATIONS ARE THE PROPERTY AND COPYRIGHT OF DAG ARCHITECTS, INC. AND SHALL NOT BE USED ON ANY OTHER PROJECT OR LOCATION EXCEPT AS DESCRIBED ON THE DRAWINGS, WITHOUT THE PRIOR WRITTEN AGREEMENT OF DAG ARCHITECTS.

G:\PC Harrison\Projects\2023 Projects\23071 PanCare Clinic Chipley\8-Design\85autoCAD\AG001 Cover Sheet.dwg, G001, 2/7/2024 5:15:27 PM, dbrogdon

DAG ARCHITECTS

DAG Architects AR0009694
455 Harrison Ave Suite I Panama City, FL 32401
850.387.1671
www.DAGarchitects.com

BID DOCUMENTS

PANCARE OF FLORIDA, INC.
RENOVATIONS & NEW CONSTRUCTION FOR PANCARE CHIPLEY
1440 MAIN ST, CHIPLEY, FL 32428

PANCARE OF FLORIDA, INC.

REVISIONS:

No.	Description	Date

COVER SHEET

PROJECT NUMBER	23071
DATED	02/05/2023

G-001

23071
PRELIMINARY REVIEW SET
02/05/2024

© 2021 DAG ARCHITECTS, INC. ALL RIGHTS RESERVED NO PART OF THIS DOCUMENT MAY BE COPIED, REPRODUCED OR TRANSMITTED BY ANY MEANS WITHOUT WRITTEN PERMISSION OF DAG ARCHITECTS, INC. THESE DRAWINGS AND SPECIFICATIONS ARE THE PROPERTY AND COPYRIGHT OF DAG ARCHITECTS, INC. AND SHALL NOT BE USED ON ANY OTHER PROJECT OR LOCATION EXCEPT AS DESCRIBED ON THE DRAWINGS, WITHOUT THE PRIOR WRITTEN AGREEMENT OF DAG ARCHITECTS.

G:\PC Harrison\Projects\2023 Projects\23071 PanCare Clinic Chipley\B-Design\B5AutoCAD\v4.5\101 Life Safety Plan.dwg, LS101, 2/8/2024 9:14:33 AM, dmogdon

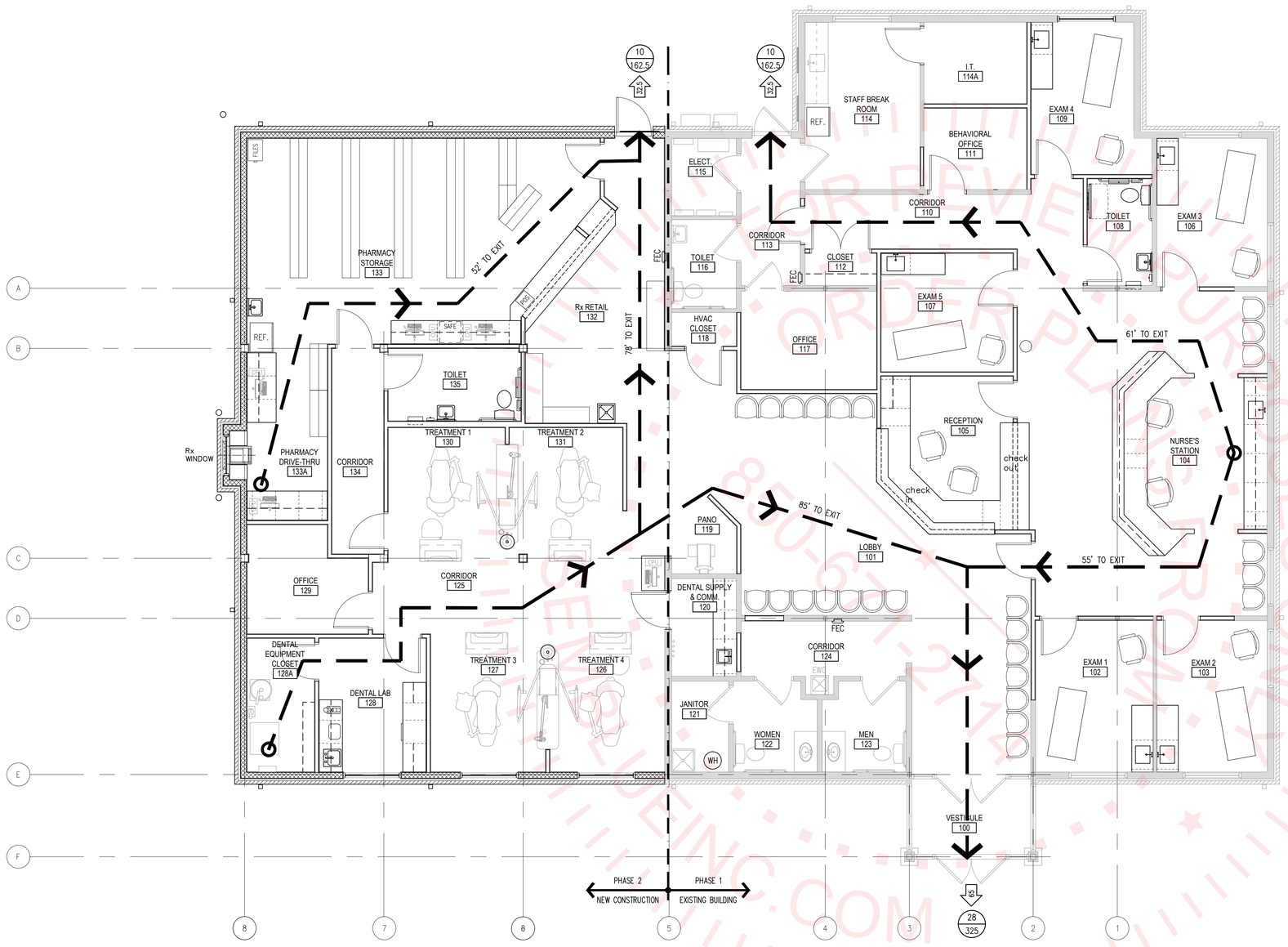

A1 | LIFE SAFETY PLAN
SCALE: 3/16" = 1'-0"

LIFE SAFETY NOTES

1. TYPE VB Construction (2020 FBC)
2. Building Square Footage: 5,348
3. Minimum corridor width 44" (Business)
4. Minimum clear opening of exit doors - 34"
5. Maximum Travel Distance
   Common Path = 30 feet or less
   Dead End Corridor = 20 feet or less
   Max Exit Access Travel Distance without sprinkler system = 200

Florida Building Code:
CHAPTER 1
ADMINISTRATION
A. Applicable Building Codes

Florida Building Code (FBC), Seventh Edition (2020)
Florida Accessibility Code, Seventh Edition (2020)
Florida Plumbing Code, Seventh Edition (2020)
Florida Mechanical Code, Seventh Edition (2020)
Florida Fuel Gas Code, Seventh Edition (2020)
Florida Energy Code (FEC), Seventh Edition (2020)
National Electrical Code, NFPA 70, 2014 Edition
Florida Fire Prevention Code, Seventh Edition (2020)
NFPA 101 (2015)

CHAPTER 5 GENERAL BUILDING HEIGHT AND AREA
Occupancy - Chapter 3, Section 304 - Business (B)
Section 309 - Mercantile (M)
Type VB Construction - Non-Sprinklered
504.3 - Height in Feet (Table 504.3a)
Allowed: 40'
Designed: Existing below allowed
504.4 - Number of Stories (Table 504.4)
Allowed: 2 stories
Designed: 1 story (existing)
506.2 - Allowable Area (Table 506.2)
Allowed: 9,000 sf max.
Designed: 3,300 sf (existing group B)
1,390 sf (addition group B)
658 sf (addition group M)
5,348 sf (total of above)

CHAPTER 10 MEANS OF EGRESS
Business (Clinic, Outpatient): 1/100 gross, 4,690 sf ÷ 100 = 469 (469 occupants)
Mercantile (Retail): 1/60 gross, 658 sf ÷ 60 = 10.9 (11 occupants)

Total Number of Occupants : 48

Egress Width (42.6")
Egress = 0.2" per occupant
- # of occupants x 0.2 = inches required for egress
- 36" SINGLE DOOR (32.5" clear open) ÷ 0.2 = 162.5
- 72" DOUBLE DOOR (65" clear open) ÷ 0.2 = 325

Total Egress Required: 480 occupants x 0.2 = 96" min.
Total Egress Provided: 130" provided.

CHAPTER 29 PLUMBING FIXTURES
A. Plumbing Fixture Counts (Table 2902.1) 2020 FBC

B. Group B Business Occupancy - 480 person count as calculated above (total count)

	Male Req'd / Provided	Female Req'd / Provided	Unisex Req'd / Provided
1. Water Closets - 1/25 for first 50 then 1/50 male/female	1 / 1	1 / 1	0 / 3
2. Lavatories - 1/40 for first 80 then 1/80 male/female	1 / 1	1 / 1	0 / 1
3. Urinals	0 / 0	0 / 0	0 / 0
4. Bathtubs & showers	0 / 0	0 / 0	0 / 0
5. Drinking Fountains - 1/100	4 required / *see note "A" below		
6. Service Sink	1 required / 1 provided		

Notes:
A. Provided are (2) wall mounted drinking fountains, (1) refrigerator mounted water dispenser, and (1) standalone water cooler

B5 | CODES
SCALE: NTS

65 — PRIMARY EGRESS WITH UNITS IN INCHES
50' TO EXIT — EGRESS DISTANCE AND DIRECTION
— EXIT OCCUPANT LOAD
— EXIT OCCUPANT CAPACITY
FE — FIRE EXTINGUISHER, WALL MOUNTED
FEC — FIRE EXTINGUISHER CABINET, SEMI-RECESSED
2-HOUR RATED PARTITION
EXIT SIGNAGE- REFER TO ELECTRICAL
BATTERY POWERED EMERGENCY LIGHT- REFER TO ELECTRICAL

A5 | LEGEND
SCALE: NTS

DAG ARCHITECTS
DAG Architects AR0009694
455 Harrison Ave Suite I Panama City, FL 32401
850.387.1671
www.DAGarchitects.com

BID DOCUMENTS

PANCARE OF FLORIDA, INC.
RENOVATIONS & NEW CONSTRUCTION FOR PANCARE CHIPLEY
1440 MAIN ST, CHIPLEY, FL 32428

PANCARE OF FLORIDA, INC.

REVISIONS:

No.	Description	Date

LIFE SAFETY PLAN

PROJECT NUMBER 23071
DATED 02/05/2023

LS-101

23071
PRELIMINARY REVIEW SET
09__/2023

STRUCTURAL GENERAL NOTES

1. GENERAL NOTES

1.1. THE GOVERNING CODE FOR THIS PROJECT IS THE FLORIDA BUILDING CODE 7th EDITION (2020). THIS CODE PRESCRIBES WHICH EDITION OF EACH REFERENCE STANDARD APPLIES TO THIS PROJECT. UNLESS OTHERWISE NOTED, ALL WORK AND MATERIALS SHALL CONFORM WITH THE GOVERNING BUILDING CODE AND ALL OTHER APPLICABLE FEDERAL, STATE AND LOCAL CODES, STANDARDS, REGULATIONS AND LAWS.

1.2. THE CONTRACTOR SHALL COORDINATE ALL CONTRACT DOCUMENTS WITH FIELD CONDITIONS, DIMENSIONS, AND PROJECT SHOP DRAWINGS PRIOR TO CONSTRUCTION. DO NOT SCALE DRAWINGS, USE ONLY PRINTED DIMENSIONS. REPORT ANY DISCREPANCIES OR FIELD CONDITIONS ENCOUNTERED IN CONFLICT WITH THE DRAWINGS IN WRITING TO THE ARCHITECT AND/OR ENGINEER PRIOR TO PROCEEDING WITH WORK. DO NOT CHANGE SIZE OR LOCATION OF STRUCTURAL MEMBERS WITHOUT WRITTEN INSTRUCTIONS FROM THE ARCHITECT OR ENGINEER OF RECORD.

1.3. THE STRUCTURE SHOWN ON THESE DRAWINGS IS SELF-SUPPORTING ONLY IN ITS COMPLETED FORM. THE DESIGN, ADEQUACY, SAFETY AND STABILITY OR ERECTION BRACING, FORMWORK, SHORING, AND TEMPORARY SUPPORTS ARE THE SOLE RESPONSIBILITY OF THE CONTRACTOR.

1.4. DETAILS LABELED AS "TYPICAL" APPLY TO ALL SITUATIONS THAT ARE THE SAME OR SIMILAR TO THOSE SPECIFICALLY REFERENCED, WHETHER OR NOT THEY ARE KEYED IN AT EACH LOCATION.

1.5. THE CONTRACTOR SHALL PROTECT ADJACENT PROPERTY, HIS OWN WORK, AND THE GENERAL PUBLIC FROM HARM. THE CONTRACTOR IS SOLELY RESPONSIBLE FOR CONSTRUCTION MEANS AND METHODS, AND JOBSITE SAFETY INCLUDING ALL OSHA REQUIREMENTS. THE STRUCTURAL ENGINEER OF RECORD HAS NO AUTHORITY TO EXERCISE ANY CONTROL OVER ANY CONSTRUCTION PERSONNEL RELATED TO THEIR WORK OR ANY HEALTH OR SAFETY PRECAUTIONS.

2. DESIGN LOADS

	LIVE LOAD	DEAD LOAD	COLLATERAL LOAD
ROOF	20 PSF	15 PSF	5 PSF

3. WIND LOAD DESIGN CRITERIA (PER ASCE 7-16)

WIND SPEED (ULT/ASD) = 130 MPH / 101 MPH
RISK CATEGORY = II
WIND EXPOSURE CATEGORY = B
ENCLOSURE CLASSIFICATION = ENCLOSED
EDGE ZONE WIDTH (a) = 5'-6"

SEE CLADDING DIAGRAM (THIS SHEET FOR COMPONENTS AND CLADDING LOADING)

COMPONETNS & CLADDING PRESSURES - HIP ROOF

EFFECTIVE WIND AREA	ZONE 1	ZONE 2e	ZONE 2r	ZONE 3	ZONE 4 (WALL)	ZONE 5 (CORNER WALL)
10 FT^2	22.7 / -40.7	22.7 / -56.2	22.7 / -56.2	22.7 / -56.2	30.4 / -33.0	30.4 / -40.7
20 FT^2	19.6 / -36.1	19.6 / -50.2	19.6 / -50.2	19.6 / -50.2	29.0 / -31.6	29.0 / -38.0
50 FT^2	16.0 / -29.9	16.0 / -42.3	16.0 / -42.3	16.0 / -42.3	27.2 / -29.8	27.2 / -34.3
100 FT^2	16.0 / -25.2	16.0 / -36.4	16.0 / -36.4	16.0 / -36.4	25.9 / -28.4	25.9 / -31.6

NOTES:
1. THE PRESSURES LISTED ARE ULTIMATE PRESSURES AND MAY BE MULTIPLIED BY 0.6 PER ASCE 7 TO DETERMINE ALLOW STRESS PRESSURES.
2. FOR EFFECTIVE AREA BETWEEN THOSE GIVEN, THE LOAD MAY BE INTERPOLATED. OTHERWISE, USE THE LOAD ASSOCIATED WITH THE LOWER EFFECTIVE AREA.

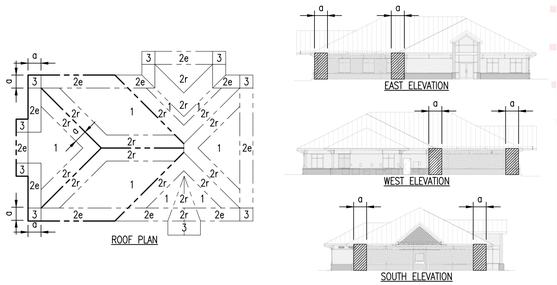

4. EARTHWORK FOR STRUCTURES

4.1. ALLOWABLE SOIL BEARING CAPACITY IS ASSUMED TO BE 2,000 PSF ON UNDISTURBED SOILS OR COMPACTED STRUCTURAL FILL. CONTRACTOR SHALL OBTAIN THE SERVICES OF A QUALIFIED GEOTECHNICAL ENGINEER TO PERFORM ALL NECESSARY TESTING, VERIFY THE BEARING CAPACITY OF THE SOILS, AND MAKE RECOMMENDATIONS FOR SITE PREPARATION.

4.2. UNLESS NOTED OTHERWISE IN THE GEOTECHNICAL REPORT, ALL SOIL BELOW SLABS ON GRADE AND FOOTINGS SHALL BE COMPACTED TO A DEPTH OF 12 INCHES AT OPTIMUM MOISTURE CONTENT TO 95% OF THE MODIFIED PROCTOR, ASTM D1557. FILL SHALL BE PLACED AND COMPACTED IN LIFTS NO GREATER THAN 12 INCHES.

4.3. PROVIDE DENSITY TESTS IN COMPACTED SUBGRADE AND FOR EACH LIFT OF FILL AS FOLLOWS:

4.3.1. FOR EACH 3,000 SQ FT OF BUILDING AREA
4.3.2. FOR EVERY 300 LINEAR FT OF STRIP FOOTING OR GRADE BEAM
4.3.3. FOR EVERY THIRD COLUMN FOOTING

4.4. THE CONTRACTOR SHALL PROVIDE TEST PITS AT THE GEOTECHNICAL ENGINEER'S RECOMMENDATION AND UNDERCUT ALL PLASTIC CLAYS WITHIN 24 INCHES OF THE BOTTOM OF ALL FOOTINGS, SLABS ON GRADE, OR PAVEMENTS. UNDERCUT MATERIAL SHALL BE REPLACED WITH COURSE GRAINED APPROVED FILL OR AS DIRECTED BY THE GEOTECHNICAL ENGINEER OF RECORD.

5. SLAB ON GRADE

5.1. ABOVE SUB-GRADE, USE FILL CONTAINING NOT MORE THAN 12% PASSING #200 SIEVE AND MAXIMUM 1"ø. COMPACT TO A DENSITY OF 95% OF THE MAXIMUM DRY DENSITY THROUGHOUT ITS FULL DEPTH AS DETERMINED BY MODIFIED PROCTOR ASTM D-1557.

5.2. ALL INTERIOR AND EXTERIOR SLABS ON GRADE SHALL BE A MINIMUM OF 4 INCHES THICK REINFORCED WITH 6x6 W1.4 x W1.4 WELDED WIRE MESH PLACED ON 6 MIL POLYETHYLENE SHEETING, UNLESS OTHERWISE NOTED IN THE CONSTRUCTION DOCUMENTS.

5.3. UNLESS OTHERWISE NOTED IN THE PLANS, PROVIDE CRACK CONTROL JOINTS AT 15 FEET MAXIMUM TO LIMIT AREAS BETWEEN JOINTS TO 225 SQUARE FEET IN ALL SLABS ON GRADE. LOCATE TO CONFORM TO BAY SPACING WHENEVER POSSIBLE. ADD CRACK CONTROL JOINTS AT RE-ENTRANT CORNERS WHICH TEND TO INVITE CRACKS.

5.4. SEE THE ARCHITECTURAL DRAWINGS FOR SLAB ON GRADE DEPRESSIONS AND OTHER REQUIREMENTS.

6. REINFORCEMENT

6.1. ALL REINFORCING STEEL SHALL BE INTERMEDIATE GRADE BILLET STEEL CONFORMING TO ASTM A615, GRADE 60, WITH THE FOLLOWING MINIMUM SPLICE LENGTH.

6.1.1. CONCRETE REINFORCEMENT = SEE PROVIDED LAP SCHEDULE

6.2. ALL REINFORCING STEEL SHALL BE INTERMEDIATE GRADE BILLET STEEL CONFORMING TO ASTM A615, GRADE 60, SEE PROVIDED LAP SCHEDULE FOR MINIMUM SPLICE LENGTH.

6.3. PROVIDE ADDITIONAL HORIZONTAL CORNER BARS TO MATCH MAIN HORIZONTAL REINFORCING STEEL AT ALL BEAMS, OR WALL INTERSECTIONS, CORNERS AND OTHER CONCRETE DIRECTIONAL CHANGES, INCLUDING FOOTINGS.

6.4. ALL BENDS, AND 90° AND 180° HOOKED BARS SHALL BE FABRICATED IN ACCORDANCE WITH ACI AND AS INDICATED IN THE STANDARD DETAILS.

6.5. REINFORCING SHALL BE ACCURATELY PLACED, RIGIDLY SUPPORTED AND FIRMLY TIED IN PLACE, WITH APPROPRIATE BAR SUPPORTS AND SPACERS.

6.6. WHERE SPECIFIED, PROVIDE PLAIN, COLD-DRAWN ELECTRICALLY-WELDED WIRE REINFORCEMENT CONFORMING TO ASTM A 1064. SUPPLY IN FLAT SHEETS ONLY. LAP SPLICE TWO CROSS WIRES PLUS TWO INCHES.

7. CONCRETE

7.1. ALL CONCRETE CONSTRUCTION SHALL COMPLY WITH ACI 301 AND 318 AND CRSI STANDARDS.

7.2. STRUCTURAL CONCRETE SHALL HAVE A MINIMUM ULTIMATE COMPRESSIVE DESIGN STRENGTH (FC') IN 28 DAYS OF:

FOUNDATIONS 3,000 PSI NW
SLAB ON GRADE 3,000 PSI NW

7.3. ALL CONCRETE SHALL BE NORMAL WEIGHT (NW), U.O.N. WITH A DESIGN UNIT WEIGHT OF 145 PCF.

7.4. CONTRACTOR SHALL MAKE SETS OF FOUR ACCEPTANCE CYLINDERS FOR STRENGTH TESTING FOR EACH 50 CUBIC YARDS OF CONCRETE PLACED. CYLINDERS SHALL BE MADE IN ACCORDANCE WITH ASTM C31 AND C172. TESTING SHALL BE PERFORMED BY AN ACI CERTIFIED TESTING LABORATORY AND SHALL BE PAID FOR BY THE CONTRACTOR. CONTRACTOR SHALL IMMEDIATELY NOTIFY THE ARCHITECT AND/OR STRUCTURAL ENGINEER OF ANY TEST NOT MEETING THE REQUIREMENTS OF THE SPECIFIED TESTS. COPIES OF REPORTS DOCUMENTING THE TEST RESULTS SHALL BE MAINTAINED BY THE CONTRACTOR AND MADE AVAILABLE UPON REQUEST.

7.5. PROVIDE COVER OVER REINFORCING STEEL AS FOLLOWS:

CAST AGAINST & EXPOSED TO EARTH/WEATHER 3"

EXPOSED TO EARTH/WEATHER
#6 THROUGH #18 REBAR 2"
#5 REBAR, W31/D31 WIRE OR SMALLER 1-1/2"

NOT EXPOSED TO EARTH/WEATHER
SLABS, WALLS, JOISTS
#14 AND #18 REBAR 1-1/2"
#11 REBAR AND SMALLER 3/4"
BEAMS AND COLUMNS
REINF, TIES, STIRRUPS, SPIRALS 1-1/2"

7.6. CURE ALL CONCRETE SURFACES FOR A PERIOD OF SEVEN DAYS UNTIL AVERAGE COMPRESSIVE STRENGTH HAS REACHED 70% OF THE SPECIFIED 28 DAY STRENGTH. CURING SHALL BE BY PONDING, MOIST CURING WITH SAND OR ABSORPTIVE MATS KEPT CONTINUOUSLY WET, CONTINUOUS APPLICATION OF STEAM (NOT EXCEEDING 105° F) OR MIST SPRAY, WATERPROOF CURING PAPER, OR LIQUID MEMBRANE FORMING CURING COMPOUND. SELECTION OF CURING METHOD SHALL BE COMPATIBLE WITH THE FINISH TO BE APPLIED TO THE CONCRETE SURFACE.

7.7. WHERE REINFORCING STEEL CONGESTION PERMITS, CONDUIT AND PIPES UP TO ONE INCH DIAMETER MAY BE EMBEDDED IN CONCRETE PER ACI 318, SECTION 6.3. SPACE AT THREE DIAMETERS ON CENTER. PLACE BETWEEN OUTER LAYERS OF REINFORCING IF CONDUITS ARE SIGNIFICANTLY CONGESTED. ADDITIONAL REINFORCING PERPENDICULAR TO PIPING MAY BE REQUIRED. REQUESTS TO EMBED LARGER PIPES SHOULD BE ACCOMPANIED BY A DETAILED DESCRIPTION AND BE SUBMITTED TO THE STRUCTURAL ENGINEER FOR EVALUATION.

REBAR LAP SPLICE LENGTHS

BAR SIZE	f'_c = 3,000 PSI		f'_c = 4,000 PSI		f'_c = 5,000 PSI	
	CLASS A	CLASS B	CLASS A	CLASS B	CLASS A	CLASS B
#3	16"	21"	14"	18"	13"	17"
#4	22"	28"	19"	25"	17"	22"
#5	27"	36"	24"	31"	21"	28"
#6	33"	43"	28"	37"	25"	33"
#7	48"	62"	42"	54"	37"	48"
#8	55"	71"	47"	62"	42"	55"
#9	62"	80"	54"	70"	48"	62"
#10	70"	90"	60"	78"	54"	70"
#11	77"	100"	67"	87"	60"	78"

REBAR LAP SPLICE NOTES:
1. CLASS B SPLICES SHALL BE PROVIDED FOR ALL COLUMN REINFORCING STEEL.
2. CLASS A SPLICES ARE ALLOWED FOR CONTINUOUS REINFORCING STEEL IF NO MORE THAN 50% OF THE STEEL IS LAPPED AT THE SAME LOCATION.

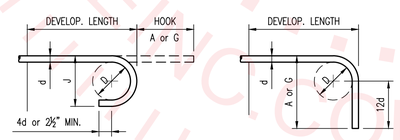

180° HOOK 90° HOOK

BAR SIZE	STD. HOOK DIMENSIONS				DEVELOP. LENGTHS		
	PIN DIAM. D	180° HOOK		90° HOOK	CONC. COMPRESSIVE STRENGTH		
		A or G	J	A or G	3,000 PSI	4,000 PSI	4,000 PSI
#3	2¼"	0'-5"	0'-3"	0'-6"	6"	6"	6"
#4	3"	0'-6"	0'-4"	0'-8"	8"	7"	6"
#5	3¾"	0'-7"	0'-5"	0'-10"	10"	9"	8"
#6	4½"	0'-8"	0'-6"	1'-0"	12"	10"	9"
#7	5¼"	0'-10"	0'-7"	1'-2"	14"	12"	11"
#8	6"	0'-11"	0'-8"	1'-4"	16"	14"	12"
#9	9½"	1'-3"	0'-11¾"	1'-8"	18"	15"	14"
#10	10¾"	1'-5"	1'-1¼"	1'-10"	20"	17"	15"
#11	12"	1'-7"	1'-2¾"	2'-1"	22"	19"	17"

REBAR STANDARD HOOK NOTES:
1. D = FINISHED BEND DIAMETERS.
2. REFER TO ACI 315 FOR ALTERNATE BEND PATTERN DIMENSIONS AND REQUIREMENTS.
3. ASTM A767 REQUIRES THAT BARS BENT COLD PRIOR TO HOT DIP GALVANIZING MUST BE FABRICATED TO AMINIMUM BEND DIAMETER EQUAL TO 7 INCHES FOR #7 BAR AND 8 INCHES FOR #8 BAR.

8. COLD-FORMED STEEL FRAMING

8.1. ALL COLD-FORMED STEEL FRAMING SHALL CONFORM TO ASTM A1003 AND BE FABRICATED AND ERECTED IN ACCORDANCE WITH MANUFACTURER'S RECOMMENDATIONS AND WITH THE LATEST EDITION OF "SPECIFICATIONS FOR THE DESIGN OF COLD-FORMED STEEL STRUCTURAL MEMBERS" BY THE AMERICAN IRON AND STEEL INSTITUTE (AISI).

8.2. COLD-FORMED STEEL FRAMING SHOWN SHALL HAVE THE FOLLOWING MINIMUM MATERIAL PROPERTIES:

8.2.1. 16 GAUGE (54 MIL) AND THICKER SHALL HAVE A MINIMUM YIELD STRESS OF Fy = 50 KSI AND A TENSILE STRENGTH OF Fu = 65 KSI.
8.2.2. 18 GAUGE (43 MIL) AND THINNER SHALL HAVE A MINIMUM YIELD STRESS OF Fy = 33 KSI AND A TENSILE STRENGTH OF Fu = 45 KSI.

8.3. USE GALVANIZED (G60) STEEL "C" STUDS, TRACKS, ANGLES AND STRAPS AS SHOWN ON DRAWINGS. ALL STUDS SHALL HAVE A MINIMUM FLANGE WIDTH OF 1-5/8 INCH WITH A 1/2 INCH RETURN LIP. TRACKS SHALL BE A MINIMUM OF THE SAME GAUGE AS STUDS WITH MINIMUM OF 1-1/4 INCH LEG.

8.4. MAXIMUM SPACING OF LATERAL BRIDGING FOR COLD-FORMED STEEL STUDS SHALL BE 4 FEET FOR SPANS GREATER THAN 10 FEET AND MIDSPAN FOR SHORTER SPANS. LATERAL BRIDGING SHALL ALSO BE PROVIDED AT FREE ENDS OF CANTILEVERED PARAPETS AND NEAR THE SUPPORTS OF CONTINUOUS SPANS.

8.5. STUDS SHALL BE FREE OF KINKS AND TWISTS AND SHALL BE SECURELY SEATED FOR FULL END BEARING ON TOP AND BOTTOM TRACK.

8.6. UNLESS INDICATED OTHERWISE, PROVIDE DOUBLE STUDS AT ALL JAMBS, CORNERS AND INTERSECTIONS.

8.7. LIGHT GAUGE FRAMING (LGF) SHALL BE CONNECTED, AT A MINIMUM, AS FOLLOWS:

LGF TO STEEL:
TRACKS - 1 PAF @ 12" O.C. STAGGERED
CLIPS - 2 PAF
LGF TO CONCRETE:
TRACKS - 1 PAF @ 12" O.C. STAGGERED
CLIPS - 2 PAF
LGF TO LGF:
TRACKS - #10 TO EACH FLANGE
CLIPS/STUD - 4 #10

8.8. SCREWS, WHERE REQUIRED, SHALL MEET THE MINIMUM REQUIREMENTS OF SAE J-429 GRADE 5 AND IFI-105. SCREWS SHALL HAVE A PROTECTIVE COATING EQUIVALENT TO CADMIUM OR ZINC PLATING, ASTM B766.

8.9. POWDER ACTUATED FASTENERS (PAF) SHALL BE HILTI X-U KNURLED SHANK FASTENERS (WITH A MINIMUM SHANK DIAMETER OF 0.157 INCHES) OR APPROVED EQUAL. A MINIMUM EMBEDMENT OF 1 INCH SHALL BE PROVIDED FOR ALL CONCRETE CONNECTIONS.

8.10. 3/16 INCH TAPCONS WITH A MINIMUM EMBEDMENT OF 1½ INCH MAY BE USED IN LIEU OF THE SPECIFIED PAF FOR CONNECTIONS OF LIGHT GAUGE FRAMING TO CONCRETE AT THE SPACINGS SHOWN ABOVE OR IN THE DETAILS FOR PAF.

8.11. #12 SELF TAPPING SCREWS MAY BE USED IN LIEU OF THE SPECIFIED PAF FOR CONNECTIONS OF LIGHT GAUGE FRAMING TO STEEL AT THE SPACINGS SHOWN ABOVE FOR PAF IF THE THICKNESS OF THE STRUCTURAL STEEL ALLOWS FOR PROPER INSTALLATION.

8.12. FIELD CUTTING OF LIGHT GAUGE FRAMING MEMBERS SHALL BE BY SAW OR SHEAR. TORCH CUTTING IS NOT PERMITTED.

8.13. SPLICING OF FRAMING COMPONENTS, OTHER THAN THE CONTINUOUS TRACK AT THE TOP AND BOTTOM OF WALLS, IS NOT PERMITTED, U.O.N. SPLICING OF TRACK USED IN THE CONSTRUCTION OF THE JAMB, HEAD OR SILL ASSEMBLIES OF FRAMED WALL OPENINGS IS NOT PERMITTED. WHERE SPLICING OF TRACK IS NECESSARY BETWEEN STUD SPACINGS, A SECTION OF STUD SHALL BE PLACED IN THE ADJOINING TRACKS ACROSS THE JOINT AND FASTENED TO THE FLANGES AT BOTH SIDES OF THE WALL.

9. PRE-ENGINEERED WOOD TRUSSES

9.1. ROOF TRUSSES SHALL BE PRE-ENGINEERED TRUSSES AS SPECIFIED AND DESIGNED FOR THE LOADS INDICATED. MINIMUM MEMBER PROPERTIES SHALL BE EQUAL TO, OR BETTER THAN, No. 2 SOUTHERN PINE. WOOD TRUSS DESIGN SHALL BE SIGNED AND SEALED BY A STRUCTURAL ENGINEER REGISTERED IN THE STATE OF FLORIDA.

9.2. SHOP DRAWINGS SHALL INCLUDE A CALCULATION PAGE FOR EACH INDIVIDUAL TRUSS. CALCULATION PAGES SHALL INCLUDE AN ELEVATION OF THE TRUSS, MEMBER SIZES AND GRADE, LOADING, REACTIONS, TRUSS DEFLECTION, MEMBER BRACING REQUIREMENTS, AND CONNECTION PLATES.

9.3. ALL WOOD TRUSSES SHALL BE DESIGNED FOR A THE LOADING INDICATED IN THE STRUCTURAL NOTES. OF THE DEAD LOAD INDICATED 10 PSF SHALL BE APPLIED TO THE BOTTOM CHORD.

9.4. ALL TRUSS BOTTOM CHORDS SHALL BE DESIGNED FOR A 10 PSF LIVE LOAD TO BE APPLIED NON-CONCURRENTLY WITH THE FLOOR/ROOF LIVE LOAD.

9.5. THE TOTAL LOAD VERTICAL DEFLECTION BE AS FOLLOWS:

ROOF TRUSSES: LIVE OR WIND - L/360 TOTAL LOAD - L/240
FLOOR TRUSSES: LIVE LOAD - L360 (OR L/480) TOTAL LOAD - L/240

9.6. ERECTION BRIDGING AND PERMANENT TRUSS BRACING IS THE RESPONSIBILITY OF THE TRUSS MANUFACTURER BUT SHALL NOT BE LESS THEN THE SCHEMATIC BRACING INDICATED ON THE FRAMING PLANS.

9.7. TRUSS TO TRUSS CONNECTIONS SHALL BE DESIGNED AND FURNISHED BY THE TRUSS MANUFACTURER'S REGISTERED PROFESSIONAL ENGINEER.

9.8. PROVIDE HURRICANE CLIPS AT ALL ROOF MEMBERS BEARING POINTS AND OTHER LOCATIONS AS INDICATED. ALL INDICATED TRUSS CLIPS SHALL BE RATED TO RESIST THE WORKING UPLIFT LOAD INDICATED IN TRUSS CALCULATIONS WITH NO REDUCTION FOR LOAD DURATION.

9.9. ALL REPAIRS OR MODIFICATIONS OF THE TRUSSES SHALL BE DESIGNED AND CERTIFIED BY THE TRUSS MANUFACTURER.

9.10. ERECTION BRACING IS THE RESPONSIBILITY OF THE CONTRACTOR.

9.11. PERMANENT TRUSS BOTTOM CHORD LATERAL BRACING, CONSISTING OF 2X4 GRADE MARKED LUMBER, NAILED WITH A MINIMUM OF (2) 16D NAILS PER TRUSS AND LAPPED AT LEAST TWO TRUSSES, SHALL BE SPACED NO GREATER THAN 15'-0".

9.12. PRE-ENGINEERED TRUSS BRACING PER TRUSS MANUFACTURER TO BE A MINIMUM OF 2X4 OF THE SAME SPECIES AS TRUSS.

© 2021 DAG ARCHITECTS, INC. ALL RIGHTS RESERVED NO PART OF THIS DOCUMENT MAY BE COPIED, REPRODUCED OR TRANSMITTED BY ANY MEANS WITHOUT WRITTEN PERMISSION OF DAG ARCHITECTS, INC. THESE DRAWINGS AND SPECIFICATIONS ARE THE PROPERTY AND COPYRIGHT OF DAG ARCHITECTS, INC. AND SHALL NOT BE USED ON ANY OTHER PROJECT OR LOCATION EXCEPT AS DESCRIBED ON THE DRAWINGS, WITHOUT THE PRIOR WRITTEN AGREEMENT OF DAG ARCHITECTS.

DAG ARCHITECTS
DAG Architects AR0009694
455 Harrison Ave Suite I Panama City, FL 32401
850.387.1671
www.DAGarchitects.com

PRELIMINARY

NOT FOR CONSTRUCTION

PANCARE OF FLORIDA, INC.
RENOVATIONS & NEW CONSTRUCTION FOR PANCARE - CHIPLEY
1440 MAIN ST, CHIPLEY, FL 32428

PANCARE OF FLORIDA, INC.

REVISIONS:

No.	Description	Date

FOUNDATION PLAN

PROJECT NUMBER	23071
DATED	11/03/2023

S001

KEVER | MCKEE ENGINEERING
1624 Metropolitan Blvd., Ste. A
Tallahassee, Florida 32308
Office: 850.727.5367
Authorization No. 31293
Brian E. Kever, P.E. FPE#65627

23071
PRELIMINARY REVIEW SET
09/__/2023

© 2021 DAG ARCHITECTS, INC. ALL RIGHTS RESERVED NO PART OF THIS DOCUMENT MAY BE COPIED, REPRODUCED OR TRANSMITTED BY ANY MEANS WITHOUT WRITTEN PERMISSION OF DAG ARCHITECTS, INC. THESE DRAWINGS AND SPECIFICATIONS ARE THE PROPERTY AND COPYRIGHT OF DAG ARCHITECTS, INC. AND SHALL NOT BE USED ON ANY OTHER PROJECT OR LOCATION EXCEPT AS DESCRIBED ON THE DRAWINGS, WITHOUT THE PRIOR WRITTEN AGREEMENT OF DAG ARCHITECTS.

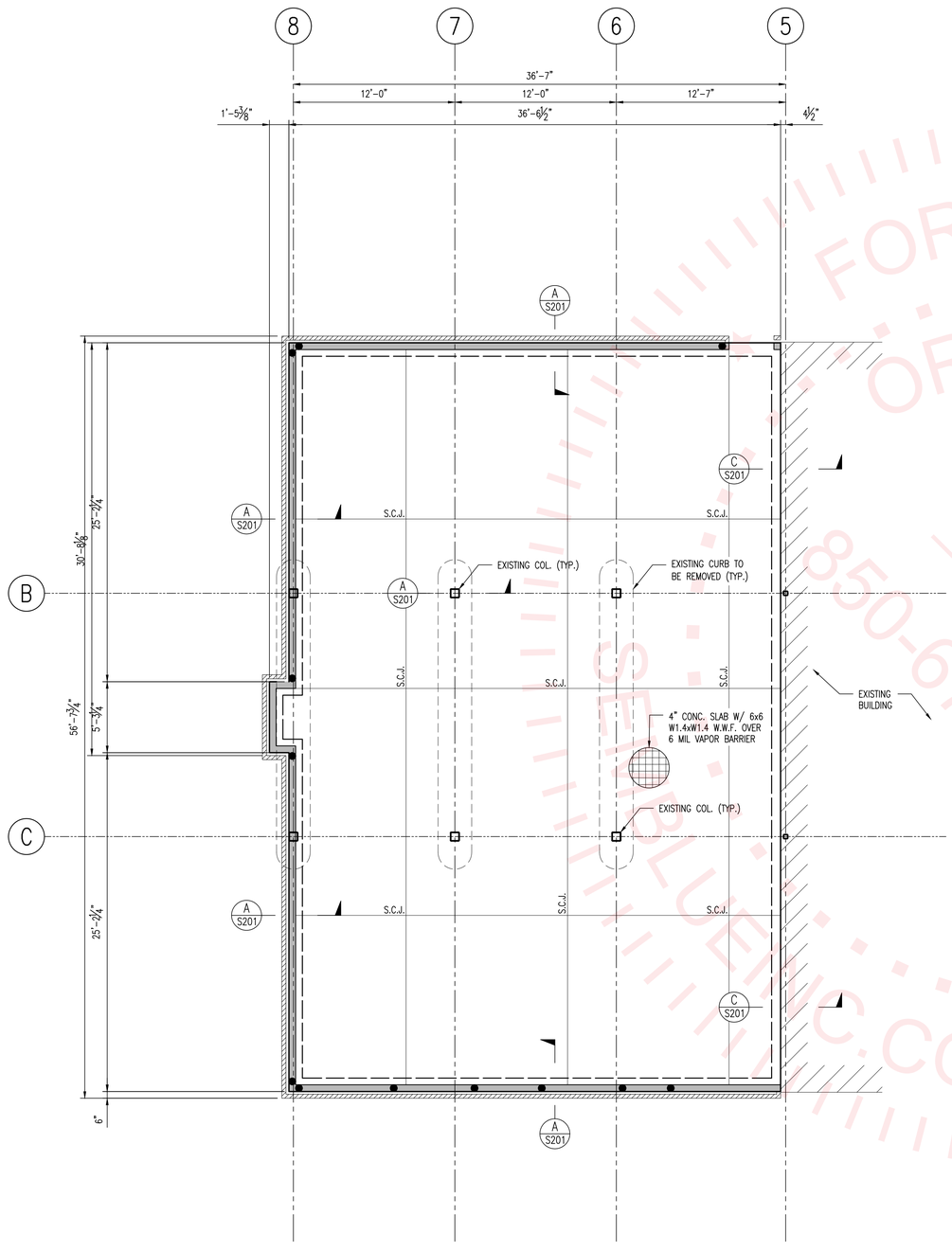

FOUNDATION PLAN (A / S101)
SCALE: 3/16" = 1'-0"

FOUNDATION NOTES:
1. THE DIMENSIONS SHOWN ARE GIVEN TO EDGE OF FINISHED SLAB, CENTERLINE OF COLUMNS, AND CENTERLINE OF FOOTINGS, RESPECTIVELY. SEE ARCHITECTURAL PLANS FOR EXACT LOCATION OF LOAD BEARING AND NON-LOAD BEARING WALLS.
2. THE FOLLOWING FINISHED FLOOR ELEVATION SHALL BE VERIFIED BY THE CONTRACTOR WITH THE FINAL CIVIL DRAWINGS. ANY DISCREPANCY SHALL BE BROUGHT TO THE ATTENTION OF THE DESIGN PROFESSIONAL OF RECORD TO BE FORMALLY ADDRESSES PRIOR TO COMMENCEMENT OF CONSTRUCTION.

HOLD DOWN LEGEND	
HOLD DOWN SYMBOL	CLASSIFICATION
●	SIMPSON HDU4 TO A MIN. (2) 600S162-43 STUDS

WALL LEGEND	
WALL HATCH	CLASSIFICATION
	LOAD BEARING WALL W/ 600S162-43 STUDS @ 16" o.c.
	BRICK VENEER WALL – SEE ARCH.

FOR REVIEW PURPOSES ONLY
ORDER PLANS FROM:
850-671-2714
SOLBLUEPRINT.COM

KEVER | MCKEE ENGINEERING
1624 Metropolitan Blvd., Ste. A
Tallahassee, Florida 32308
Office: 850.727.5367
Authorization No. 31293
Brian E. Kever, P.E. FPE#65627

DAG ARCHITECTS
DAG Architects AR0009694
455 Harrison Ave Suite I Panama City, FL 32401
850.387.1671
www.DAGarchitects.com

PRELIMINARY

NOT FOR CONSTRUCTION

PANCARE OF FLORIDA, INC.
RENOVATIONS & NEW CONSTRUCTION
FOR PANCARE - CHIPLEY
1440 MAIN ST, CHIPLEY, FL 32428

PANCARE OF FLORIDA, INC.

REVISIONS:

No.	Description	Date

FOUNDATION PLAN

PROJECT NUMBER	23071
DATED	11/03/2023

S101

23071
PRELIMINARY REVIEW SET
09/__/2023

© 2021 DAG ARCHITECTS, INC. ALL RIGHTS RESERVED NO PART OF THIS DOCUMENT MAY BE COPIED, REPRODUCED OR TRANSMITTED BY ANY MEANS WITHOUT WRITTEN PERMISSION OF DAG ARCHITECTS, INC. THESE DRAWINGS AND SPECIFICATIONS ARE THE PROPERTY AND COPYRIGHT OF DAG ARCHITECTS, INC. AND SHALL NOT BE USED ON ANY OTHER PROJECT OR LOCATION EXCEPT AS DESCRIBED ON THE DRAWINGS, WITHOUT THE PRIOR WRITTEN AGREEMENT OF DAG ARCHITECTS.

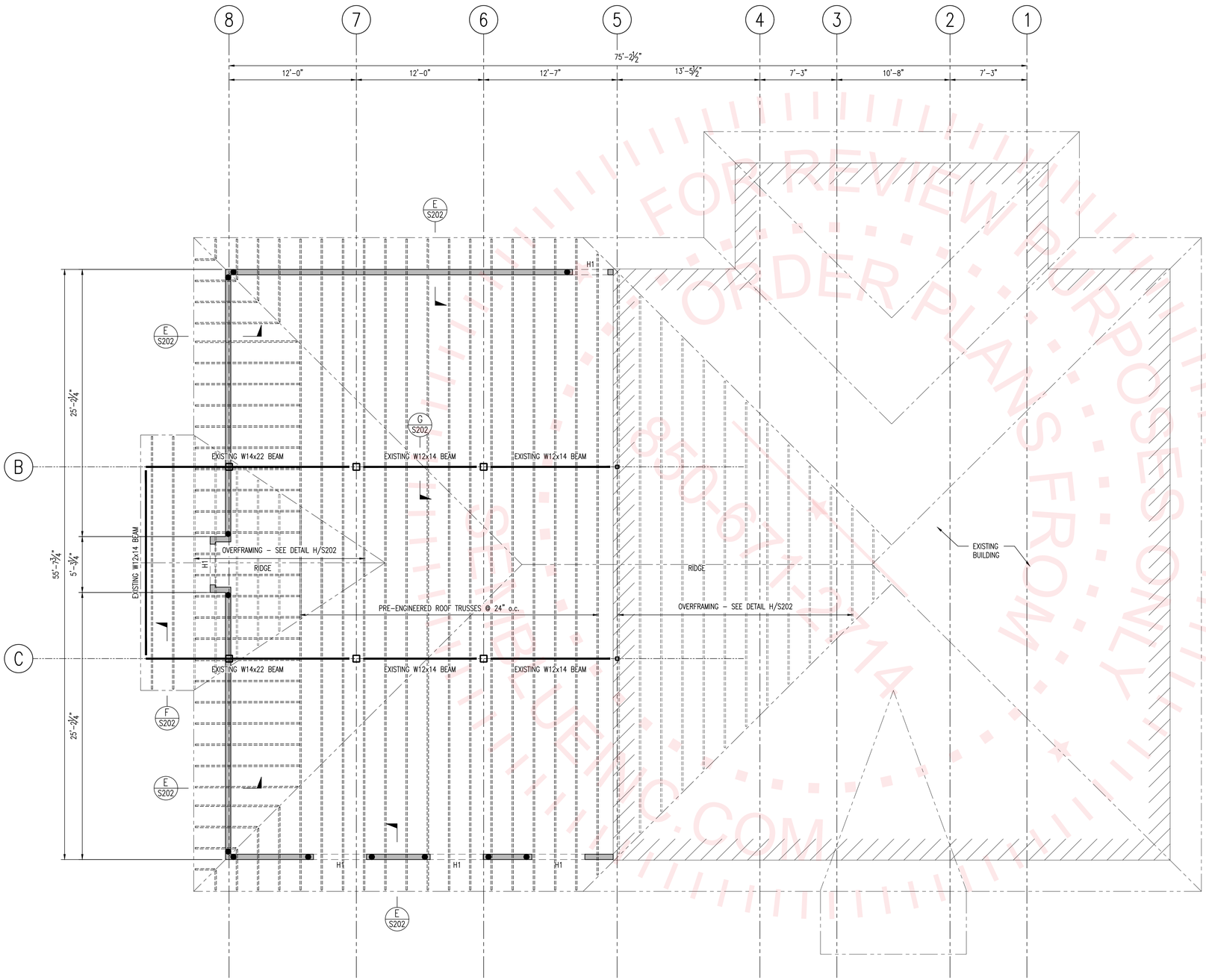

FRAMING NOTES:

1. ROOF SHEATHING SHALL BE ⅝" PLYWOOD (WOOD STRUCTURAL PANELS – APA RATED SHEATHING, STRENGTH INDEX 24/16) FASTEN WITH 10d (0.148"ø) RINGSHANK NAILS AT 4" ALONG PANEL EDGES AND 6" ALONG INTERMEDIATE SUPPORTING MEMBERS.
2. ALL EXTERIOR WALLS SHEATHING SHALL BE ⅝" THICK DENSGALSS FIREGUARD SHEATHING OR APPROVED ALTERNATE.
3. ALL EXTERIOR SHEATHING SHALL BE INSTALLED HORIZONTALLY AND IN ACCORDANCE WITH MANUFACTURER'S RECOMMENDATIONS.
4. FASTEN WITH #8 BUGLE HEAD SCREWS @ 8" o.c. AT EACH SUPPORT MEMBER (MINIMUM).
5. ADD (3) 2x6 STUD PACK AT TRUSS GIRDER BEARING ON WALL.

CFS HEADER & JAMB SCHEDULE

MARK	BEAM TYPE	JAMB TYPE	CONNECTION TYPE			COMMENTS
			BEAM–JAMB	JAMB–BASE	JAMB–TOP	
H1	B01	J01	(2) RCA225/54 [PATTERN 5B]	(2) RCA225/54 [PATTERN 5B]	(2) RCA225/54 [PATTERN 5B]	

HOLD DOWN LEGEND

HOLD DOWN SYMBOL	CLASSIFICATION
●	SIMPSON HDU4 TO A MIN. (2) 600S162–43 STUDS

ROOF FRAMING PLAN (A / S102)
SCALE: 3/16" = 1'-0"

KEVER | MCKEE ENGINEERING
1624 Metropolitan Blvd., Ste. A
Tallahassee, Florida 32308
Office: 850.727.5367
Authorization No. 31293
Brian E. Kever, P.E. FPE#65627

DAG ARCHITECTS
DAG Architects AR0009694
455 Harrison Ave Suite I Panama City, FL 32401
850.387.1671
www.DAGarchitects.com

PRELIMINARY

NOT FOR CONSTRUCTION

PANCARE OF FLORIDA, INC.
RENOVATIONS & NEW CONSTRUCTION FOR PANCARE - CHIPLEY
1440 MAIN ST, CHIPLEY, FL 32428

PANCARE OF FLORIDA, INC.

REVISIONS:

No.	Description	Date

ROOF FRAMING PLAN

PROJECT NUMBER	23071
DATED	11/03/2023

S102

23071
PRELIMINARY REVIEW SET
09/__/2023

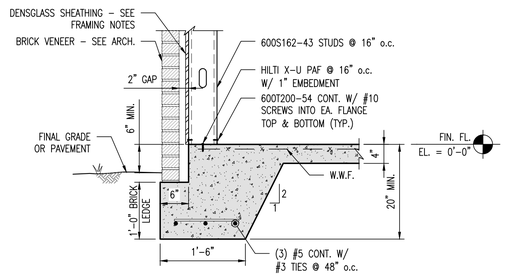

TYP. FOUNDATION DETAIL (A / S201)
SCALE: ¾" = 1'-0"

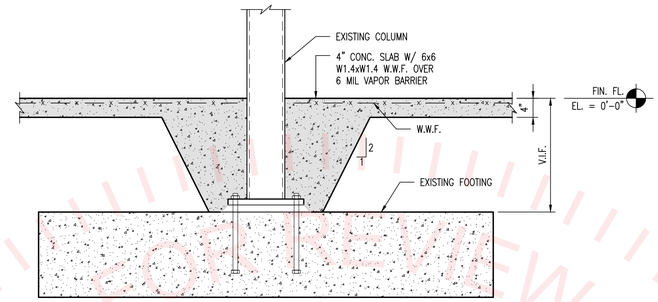

TYP. COLUMN POUR DETAIL (B / S201)
SCALE: ¾" = 1'-0"

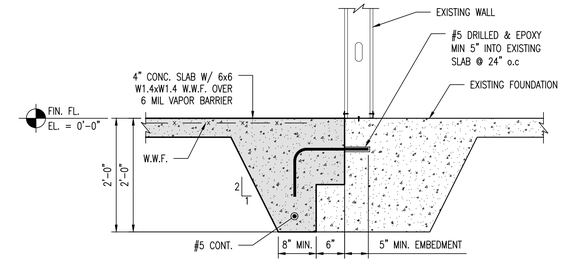

8" TURNDOWN DETAIL (C / S201)
SCALE: ¾" = 1'-0"

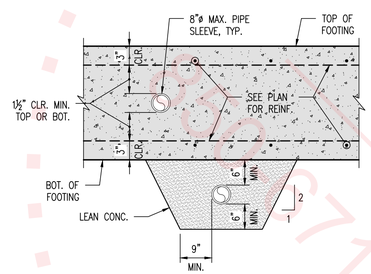

PIPE WITHIN OR BELOW FOOTING

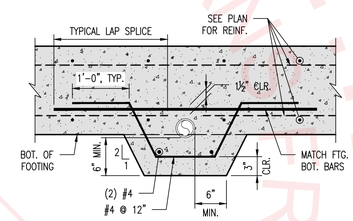

PIPE CONFLICTS WITH FOOTING REINFORCEMENT

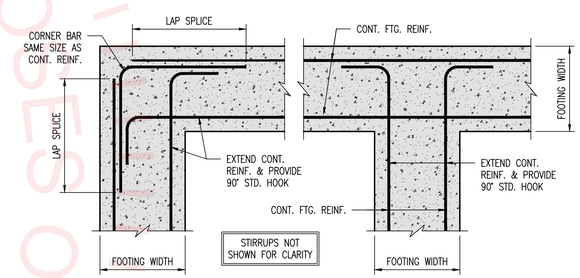

TYP. FOOTING INTERSECTION DETAIL (F / S201)
SCALE: ¾" = 1'-0"

NOTE TO CONTRACTOR:
ALL PAF EMBEDMENT SHALL BE ¾" INTO POST-TENSIONED CONCRETE SLAB AT JAMB/TRACK TOP CONNECTION

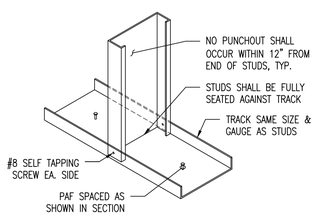

TYPICAL STUD BASE CONNECTION

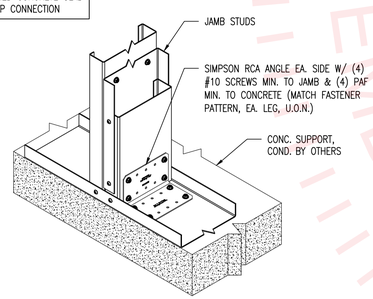

TYPICAL JAMB BASE CONNECTION

LIGHT GAUGE BASE CONNECTION NOTES:
1. CONNECTIONS SHOWN IN THIS DETAIL APPLY TO THE TOP OR BOTTOM OF TYPICAL SIMPLE SPANNING WALL STUDS SUBJECT TO WIND LOADING WHERE VERTICAL DEFLECTION ALLOWANCE IS NOT REQUIRED.
2. SEE DETAILS FOR OTHER CONNECTIONS WHERE STUDS BYPASS SLAB EDGE OR SUPPORTING BEAMS OR WHERE HANGING SPANDREL TYPE CONDITIONS OCCUR.

TYP. LGS BASE CONNECTION DETAIL (D / S201)
NO SCALE

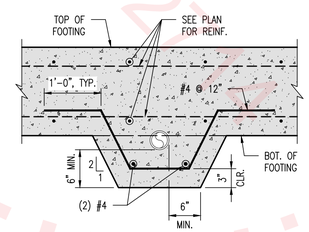

PIPE CONFLICTS WITH BOTTOM OF FOOTING

TYP. FOOTING PENETRATION DETAIL (E / S201)
SCALE: 1" = 1'-0"

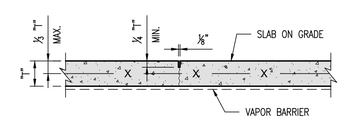

SAWCUT CONTROL JOINT (SCJ)
NOTE: SAWCUT SLAB WITHIN 12 HOURS OF POURING SLAB

SLAB ON GRADE JOINT (G / S201)
SCALE: 1" = 1'-0"

FOR REVIEW PURPOSES ONLY
ORDER PLAN
SEAL 67142
ASSEMBLUEINC.COM

© 2021 DAG ARCHITECTS, INC. ALL RIGHTS RESERVED. NO PART OF THIS DOCUMENT MAY BE COPIED, REPRODUCED OR TRANSMITTED BY ANY MEANS WITHOUT WRITTEN PERMISSION OF DAG ARCHITECTS, INC. THESE DRAWINGS AND SPECIFICATIONS ARE THE PROPERTY AND COPYRIGHT OF DAG ARCHITECTS, INC. AND SHALL NOT BE USED ON ANY OTHER PROJECT OR LOCATION EXCEPT AS DESCRIBED ON THE DRAWINGS, WITHOUT THE PRIOR WRITTEN AGREEMENT OF DAG ARCHITECTS.

DAG ARCHITECTS
DAG Architects AR0009694
455 Harrison Ave Suite I Panama City, FL 32401
850.387.1671
www.DAGarchitects.com

PRELIMINARY

NOT FOR CONSTRUCTION

PANCARE OF FLORIDA, INC.
RENOVATIONS & NEW CONSTRUCTION FOR PANCARE - CHIPLEY
1440 MAIN ST, CHIPLEY, FL 32428

PANCARE OF FLORIDA, INC.

REVISIONS:

No.	Description	Date

FOUNDATION DETAILS

PROJECT NUMBER	23071
DATED	11/03/2023

S201

KEVER | MCKEE ENGINEERING
1624 Metropolitan Blvd., Ste. A
Tallahassee, Florida 32308
Office: 850.727.5367
Authorization No. 31293
Brian E. Kever, P.E. FPE#65627

23071
PRELIMINARY REVIEW SET
09/__/2023

STEEL STUD MANUFACTURERS ASSOCIATION (SSMA) MEMBER DESIGNATION

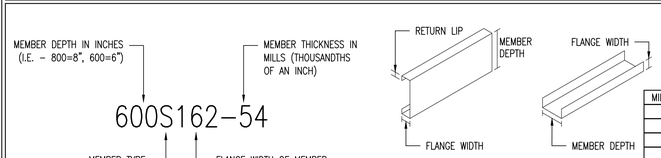

MILLS TO GAUGE CHART	
MILLS	GAUGE
33	20
43	18
54	16
68	14
97	12

CFS HEADER & JAMB SCHEDULE

MARK	BEAM TYPE	JAMB TYPE	CONNECTION TYPE			COMMENTS
			BEAM–JAMB	JAMB–BASE	JAMB–TOP	
H1	B01	J01	(2) RCA225/54 [PATTERN 5B]	(2) RCA225/54 [PATTERN 5B]	(2) RCA225/54 [PATTERN 5B]	

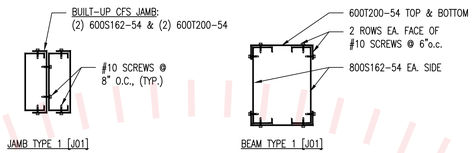

BUILT–UP MEMBER DETAIL (C / S202)
NO SCALE

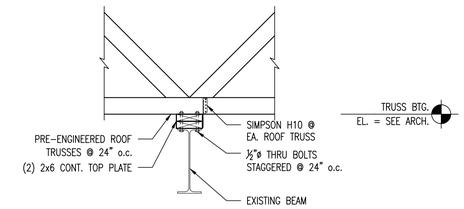

INTERIOR BEAM BEARING DETAIL (G / S202)
SCALE: ¾" = 1'–0"

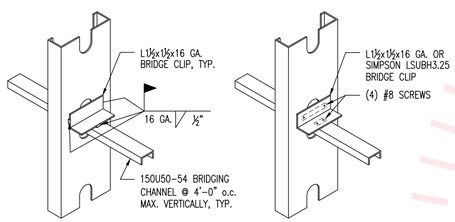

LIGHT GAUGE BRIDGING NOTES:
1. BRIDGING IS REQUIRED FOR LOADINGS APPLIED BEFORE SHEATHING IS ATTACHED TO BOTH FLANGES. BRIDGING PROVIDES RESISTANCE TO ROTATION CAUSED BY WIND LOADING AND RESISTANCE TO BOTH ROTATION AND MINOR AXIS BENDING CAUSED BY AXIAL LOADING.
2. BRIDGING SHALL BE EITHER WELDED OR SCREWED AS SHOWN IN THE DETAIL ABOVE.
3. BRIDGING SHALL BE INSTALLED HORIZONTALLY IN ALL LOAD–BEARING WALLS @ 4'–0" o.c MAX

TYP. LGS BRIDGING DETAIL (A / S202)
NO SCALE

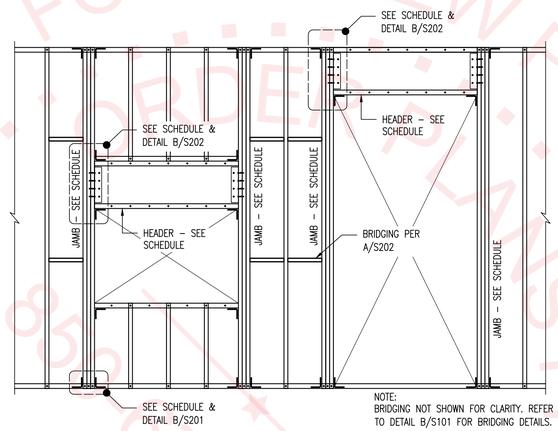

TYP. WALL ELEVATION (D / S202)
NO SCALE

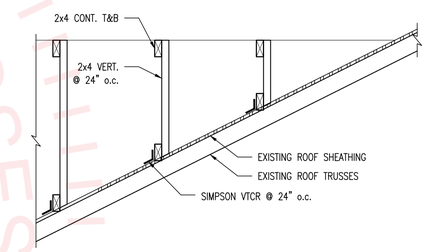

OVERFRAMING DETAIL (H / S202)
SCALE: ¾" = 1'–0"

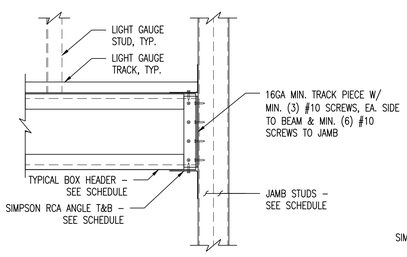

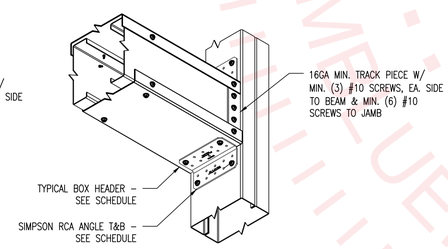

TYP. BEAM TO JAMB CONNECTION (B / S202)
NO SCALE

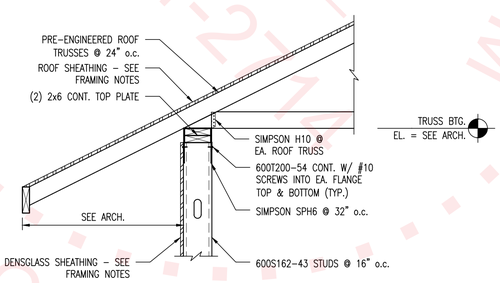

WALL BEARING DETAIL (E / S202)
SCALE: ¾" = 1'–0"

MODELS	PATTERN 3A	PATTERN 3B	PATTERN 3C
RCA223/54 RAC223/68 RCA223/97 RAC333/54 RCA333/68 RAC333/97			

MODELS	PATTERN 5A	PATTERN 5B	PATTERN 5C	PATTERN 5D	PATTERN 5E
RCA225/54 RAC225/68 RCA225/97 RAC335/54 RCA335/68 RAC335/97					

SIMPSON RCA SCREW PATTERN CHART (J / S202)
NO SCALE

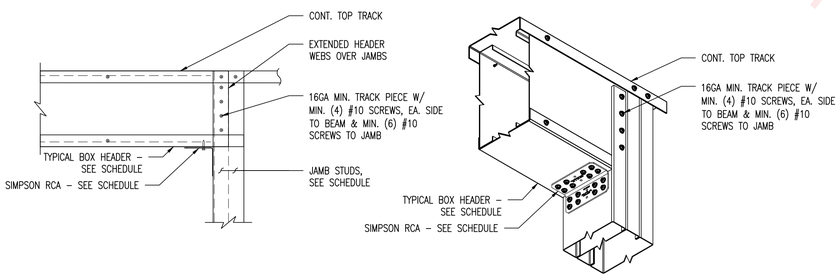

TYP. BEAM TO JAMB CONNECTION (B / S202)
NO SCALE

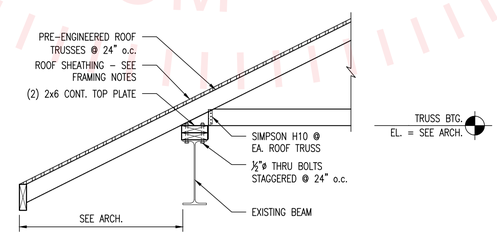

BEAM BEARING DETAIL (F / S202)
SCALE: ¾" = 1'–0"

FOR REVIEW PURPOSES ONLY
ORDERS@SEMRUEINC.COM 850-271-2700

© 2021 DAG ARCHITECTS, INC. ALL RIGHTS RESERVED NO PART OF THIS DOCUMENT MAY BE COPIED, REPRODUCED OR TRANSMITTED BY ANY MEANS WITHOUT WRITTEN PERMISSION OF DAG ARCHITECTS, INC. THESE DRAWINGS AND SPECIFICATIONS ARE THE PROPERTY AND COPYRIGHT OF DAG ARCHITECTS, INC. AND SHALL NOT BE USED ON ANY OTHER PROJECT OR LOCATION EXCEPT AS DESCRIBED ON THE DRAWINGS. WITHOUT THE PRIOR WRITTEN AGREEMENT OF DAG ARCHITECTS.

DAG ARCHITECTS
DAG Architects AR0009694
455 Harrison Ave Suite I Panama City, FL 32401
850.387.1671
www.DAGarchitects.com

PRELIMINARY

NOT FOR CONSTRUCTION

PANCARE OF FLORIDA, INC.
RENOVATIONS & NEW CONSTRUCTION FOR PANCARE - CHIPLEY
1440 MAIN ST, CHIPLEY, FL 32428

PANCARE OF FLORIDA, INC.

REVISIONS:

No.	Description	Date

KEVER | MCKEE ENGINEERING
1624 Metropolitan Blvd., Ste. A
Tallahassee, Florida 32308
Office: 850.727.5367
Authorization No. 31293
Brian E. Kever, P.E. FPE#65627

STRUCUTRAL DETAILS

PROJECT NUMBER	23071
DATED	11/03/2023

S202

23071
PRELIMINARY REVIEW SET
02/05/2024

0" DENOTES FINISH FLOOR
27.8' FINISH FLOOR ELEVATION
-10" DENOTES DISTANCE BELOW FINISH FLOOR
27.8' SPOT ELEVATION

GRID KEY A1 / SHEET APPEARS ON A500 — DETAIL KEY
GRID KEY A1 / SHEET APPEARS ON A300 — BUILDING SECTION WALL SECTION
GRID KEY A1 / SHEET APPEARS ON A400 — INTERIOR ELEVATION ONE WALL
GRID KEY A1 / D1 A600 B1 / SHEET APPEARS ON C1 — INTERIOR ELEVATION MORE THAN ONE WALL SAME ROOM
ROOM 100 — NAME / NUMBER — ROOM NAME & NUMBER

CONCRETE WALL THICKNESS SEE FLOOR PLAN FOR THICKNESS
CMU WALL, 8" (UNO)
TYPICAL EXTERIOR STUD WALL
TYPICAL INTERIOR STUD WALL
W1 — WALL TYPE CODE
FEC — PARTIAL RECESSED FIRE EXTINGUISHER CABINET
1 HOUR RATED FIRE BARRIER WALL UL DESIGNS: U419 (STEEL STUD & GYPSUM)
EXISTING WALLS TO REMAIN
TYPICAL INTERIOR WALL; TERMINATE AT 6" ABOVE CEILING U.N.O., REFER TO PARTITION TYPE SHEET FOR SPECIFIC CONSTRUCTION
EXTERIOR WALL W/ EXTERIOR BRICK VENEER WAINSCOT; REFER TO WALL SECTION SHEET FOR CONSTRUCTION
EXISTING WINDOW TO REMAIN
NEW WINDOW, SEE SCHEDULE
WINDOW TYPE W1 — WINDOW TYPE
DOOR NUMBER ### — NEW DOOR & NUMBER, SEE SCHEDULE
EXISTING DOOR TO REMAIN

B1 SYMBOLS / LEGEND

SCALE: NTS

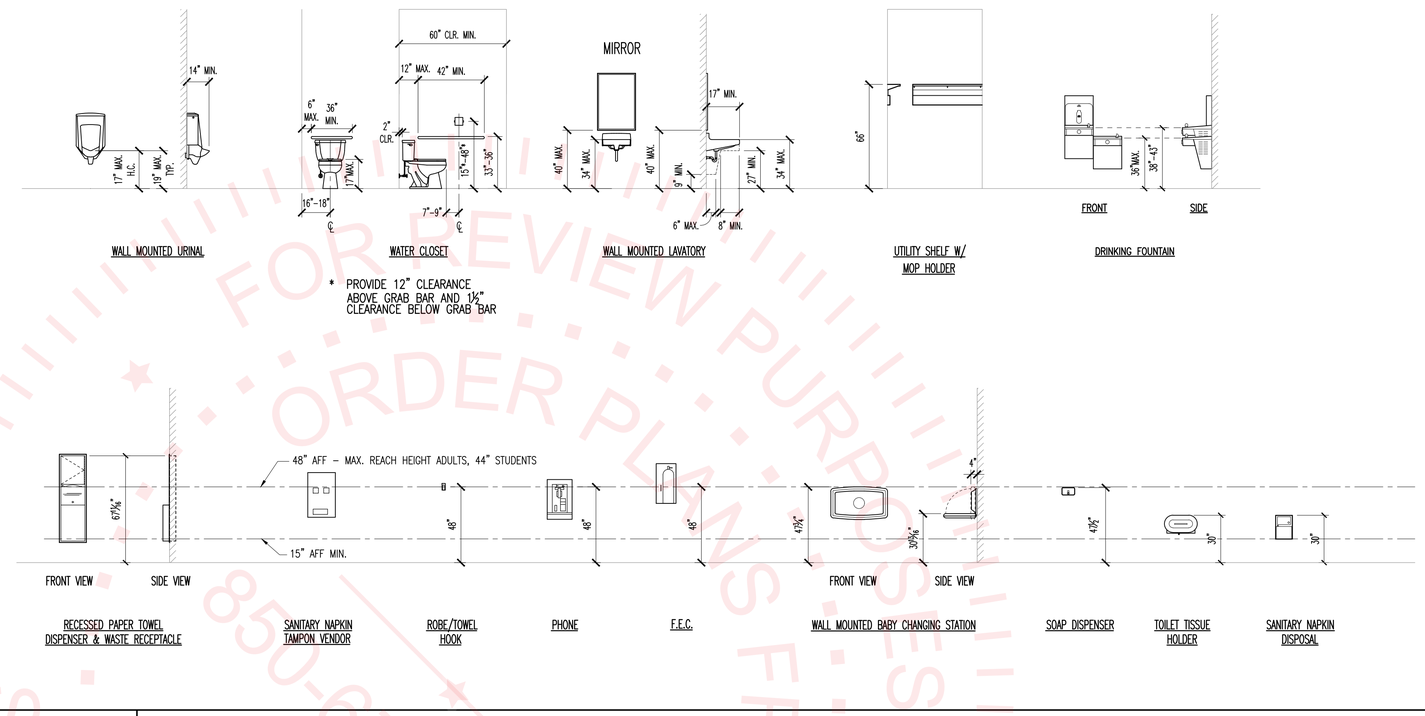

B2 TYPICAL MOUNTING HEIGHTS

SCALE: 1/4" = 1'-0"

A/C	AIR CONDITION
ACT	ACOUSTICAL CEILING TILE
ADA	AMERICANS WITH DISABILITIES ACT
ADJ	ADJUSTABLE
AHU	AIR HANDLING UNIT
AFF	ABOVE FINISHED FLOOR
ALM	ALARM
ALUM	ALUMINUM
ANOD	ANODIZED
ARCH	ARCHITECT
AWT	ACOUSTICAL WALL TREATMENT
BALC	BALCONY
BD	BOARD
BI FLD DR	BIFOLDING DOORS
BITUM	BITUMINOUS
BLDG	BUILDING
BM	BENCHMARK
BOT	BOTTOM
BR	BEDROOM
BRKT	BRACKET
℄	CENTER LINE
C/C	CENTER TO CENTER
CAB	CABINET
CBB	CEMENTITIOUS (BACKER) BOARD
CH	COAT HOOK
CH BD	CHALKBOARD
CJ	CONTROL JOINT
CLG	CEILING
CLL	COLUMN LINE
CMU	CONCRETE MASONRY UNIT
COL	COLUMN
CPT	CARPET
CR	CLOSET ROD
CT	CERAMIC TILE
CTB	CERAMIC TILE BASE
CTR	CENTER
CW	CASEMENT WINDOW
DBL	DOUBLE
DEMO	DEMOLISH OR DEMOLITION
DET	DETAIL
DHW	DOUBLE HUNG WINDOWS
DIA	DIAMETER
DIM	DIMENSION
DMPF	DAMP PROOFING
DN	DOWN
DR	DOOR
DS	DOWN SPOUT
DWG	DRAWING
E	EAST
EA	EACH
EB	EXPANSION BOLT
EIFS	EXTERIOR INSULATION AND FINISH SYSTEM
EJ	EXPANSION JOINT
EL	ELEVATION
ELEV	ELEVATOR OR ELEVATION
EQ	EQUAL
EQUIP	EQUIPMENT
EWC	ELECTRIC WATER COOLER
EXH	EXHAUST
EXIST	EXISTING
EXT	EXTERIOR
FA	FIRE ALARM
FEC	FIRE EXTINGUISHER CABINET
FIN	FINISH
FIN FLR	FINISH FLOOR
FIN GR	FINISH GRADE
FLR	FLOOR
FLR FIN	FLOOR FINISH
FLR SK	FLOOR SINK
FLUOR	FLUORESCENT
FO	FINISHED OPENING
FOS	FACE OF STUD
FT	FEET
FV	FIELD VERIFY
FX	FIRE EXTINGUISHER
GA	GAUGE
GALV	GALVANIZED
GC	GENERAL CONTRACTOR
GDR	GUARD RAIL
GFRG	GLASS-FIBER-REINFORCED GYPSUM
GL	GLASS
GL BLK	GLASS BLOCK
GR FL	GROUND FLOOR
GYM	GYMNASIUM
GYP BD	GYPSUM WALL BOARD
H&CW	HOT AND COLD WATER
HB	HOSE BIB
HC	HANDICAP
HCT	HOSE CABINET
HDG	HOT DIPPED GALVANIZED
HMD	HOLLOW METAL DOOR
HMDF	HOLLOW METAL DOOR AND FRAME
HMF	HOLLOW METAL FRAME
HORIZ	HORIZONTAL
HT	HEIGHT
HW	HOT WATER
ID	INSIDE DIAMETER
INCL	INCLUDED
INFO	INFORMATION
INSUL	INSULATION
INT	INTERIOR
JAN CLO	JANITOR CLOSET
LAM	LAMINATE
LAM GL	LAMINATED GLASS
LAV	LAVATORY
LD BRG	LOAD-BEARING
LT GA	LIGHT GAGE
LVR	LOUVER
LWC	LIGHTWEIGHT CONCRETE
MAX	MAXIMUM
MBR	MASTER BEDROOM
MD	METAL DECK
MEMB	MEMBRANE
METD	METAL DOOR
METF	METAL FLASHING
MEZZ	MEZZANINE
MID	MIDDLE
MO	MASONRY OPENING
MECH	MECHANICAL
MFR	MANUFACTURER
MFR REC	MANUFACTURER'S RECOMMENDATION
MIN	MINIMUM
MISC	MISCELLANEOUS
MLDG	MOLDING (MOULDING)
MRT	MARBLE THRESHOLD
MS	MOP SINK
MTL	METAL
MWB	MEMBRANE WATERPROOFING
N	NORTH
NA	NOT APPLICABLE
NIC	NOT IN CONTRACT
NTS	NOT TO SCALE
NO	NUMBER
OC	ON CENTER
OF/CI	OWNER FURNISHED INSTALLED
OF/OI	OWNER FURNISHED / OWNER INSTALLED
OH DR	OVERHEAD (COILING) DOOR
ORD	OVERFLOW ROOF DRAIN
PAF	POWER ACTUATED FASTEN
PCC	PRE-CAST CONCRETE
PEWC	PORTABLE ELECTRIC WATER COOLER
PLAM	PLASTIC LAMINATE
PNL	PANEL
PR	PAIR
PT	PAINT / PRESSURE TREATED
PWR	POWER
QTY	QUANTITY
QTR	QUARTER
R	RADIUS
RB	RUBBER
RCP	REFLECTED CEILING PLAN
RD	ROOF DRAIN
RDL	ROOF DRAIN LEADER
RDG INS	RIGID INSULATION, SOLID
REBAR	REINFORCING STEEL BARS
REC	RECESSED
REF	REFERENCE
REINF	REINFORCE
REQD	REQUIRED
REV	REVISION
RH	RIGHT HAND
RLG	RAILING
RM	ROOM
RO	ROUGH OPENING
S	SOUTH
SAN	SANITARY
SCHED	SCHEDULE
SCMU	SOLID CONCRETE MASONRY UNIT
SCWD	SOLID CORE WOOD DOOR
SD	SHOP DRAWINGS
SCP	SCUPPER
SGD	SLIDING GLASS DOOR
SH	SHINGLES
SHR	SHOWER
SHRD	SHOWER DRAIN
SHR HD	SHOWER HEAD
SHT	SHEET
SHV	SHELVING
SIM	SIMILAR
SKLT	SKYLIGHT
SF	SQUARE FOOT (FEET)
SLNT	SEALANT
SM	SHEET METAL
SMLS	SEAMLESS
SQ	SQUARE
SQ YD	SQUARE YARD
SS	STANDING SEAM (ROOF)
SST	STAINLESS STEEL
ST	STREET
STC	SOUND TRANSMISSION CLASS
STL	STEEL
STL JST	STEEL JOIST
STL RF DK	STEEL ROOF DECK
TEMP	TEMPORARY
THK	THICKNESS
TMPD GL	TEMPERED GLASS
TN	TRUE NORTH
TO	TOP OF _____
TOB	TOP OF BEAM
TOS	TOP OF STEEL
TYP	TYPICAL
UCD	UNDERCUT DOOR
UNO	UNLESS NOTED OTHERWISE
UR	URINAL
VAP PRF	VAPOR PROOF
VB	VINYL BASE
VCT	VINYL COMPOSITION TILE
VERT	VERTICAL
VFAT	VINYL FACED ACOUSTICAL TILE
VIF	VERIFY IN FIELD
VR	VAPOR RETARDER
VTR	VENT THROUGH ROOF
W/	WITH
W/O	WITHOUT
WC	WATER CLOSET
WD	WOOD
WDF	WOOD DOOR AND FRAME
WGL	WIRED GLASS
WH	WATER HEATER
WP	WEATHERPROOF
WPM	WEATHERPROOF MEMBRANE
WWF	WELDED WIRE FABRIC

A1 ABBREVIATIONS

SCALE: NTS

FLORIDA PRODUCT APPROVAL NUMBERS

PRODUCT MANUFACTURER	ITEM	APPROVAL TYPE	APPROVAL NUMBER
CORAL	STOREFRONT WINDOWS - FL 550T	STATE	FL-21038 (impact)
BERRIDGE	STANDING SEAM METAL ROOFING SYSTEM	STATE	FL-19999.2
GREENHECK	EXTERIOR LOUVERS	STATE	FL-10088.1

B4 FL PRODUCT APPROVAL NUMBERS

SCALE: NTS

FOR REVIEW PURPOSES ONLY
ORDER PLANS FROM
STARTBUILDING.COM
850-913-1234

© 2021 DAG ARCHITECTS, INC. ALL RIGHTS RESERVED. NO PART OF THIS DOCUMENT MAY BE COPIED, REPRODUCED OR TRANSMITTED BY ANY MEANS WITHOUT WRITTEN PERMISSION OF DAG ARCHITECTS, INC. THESE DRAWINGS AND SPECIFICATIONS ARE THE PROPERTY AND COPYRIGHT OF DAG ARCHITECTS, INC. AND SHALL NOT BE USED ON ANY OTHER PROJECT OR LOCATION EXCEPT AS DESCRIBED ON THE DRAWINGS, WITHOUT THE PRIOR WRITTEN AGREEMENT OF DAG ARCHITECTS.

G:\PC Harrison\Projects\2023 Projects\23071 PanCare Clinic Chipley\B-Design\B5AutoCAD\A001 Abbreviations Legend.dwg, A010, 2/7/2024 2:32:28 PM, dbrogdon

DAG ARCHITECTS
DAG Architects AR0009694
455 Harrison Ave Suite I Panama City, FL 32401
850.387.1671
www.DAGarchitects.com

BID DOCUMENTS

PANCARE OF FLORIDA, INC.
RENOVATIONS & NEW CONSTRUCTION FOR PANCARE CHIPLEY
1440 MAIN ST, CHIPLEY, FL 32428

PANCARE OF FLORIDA, INC.

REVISIONS:

No.	Description	Date

ABBREVIATIONS, SYMBOLS, LEGEND, & FL PRODUCT APPROVAL

PROJECT NUMBER	23071
DATED	02/05/2023

A-001

23071
PRELIMINARY REVIEW SET
02/05/2024

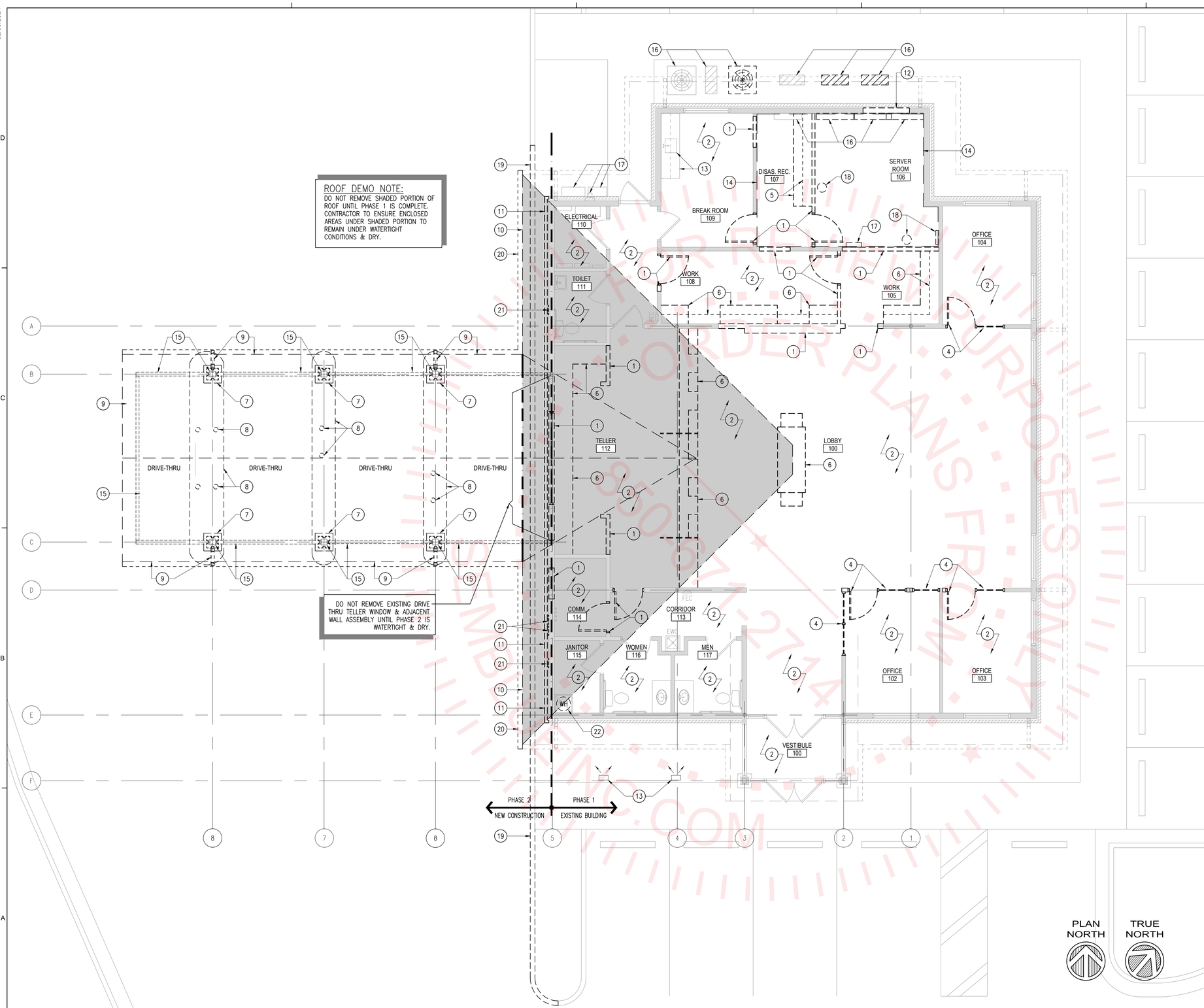

DEMO KEYNOTES:

1. REMOVE EXISTING STUD WALL, DOOR, & WINDOW ASSEMBLY AS INDICATED.
2. REMOVE EXISTING FLOOR FINISHES.
3. NOT USED
4. REMOVE EXISTING DOOR & STORE FRONT ASSEMBLY; PATCH & REPAIR TO ACCEPT NEW WORK.
5. REMOVE EXISTING CABINETS & PLUMBING FIXTURES.
6. REMOVE EXISTING MILLWORK/CABINETS & ASSOCIATED EQUIPMENT.
7. REMOVE EXISTING COLUMN WRAP DOWN TO COLUMNS; COLUMNS & BEAMS TO REMAIN– CONTRACTOR TO PROTECT EXISTING COLUMNS & BEAMS FROM HARM.
8. REMOVE EXISTING DRIVE–THRU ISLANDS, INCLUDING BUT NOT LIMITED TO CONCRETE, BOLLARDS, EQUIPMENT, CONDUITS, ETC.
9. REMOVE EXISTING DRIVE–THRU CANOPY, INCLUDING BUT NOT LIMITED TO CANOPY ROOF, TRUSSES, GUTTER, DOWNSPOUT, MISC. ELECTRICAL COMPONENTS, ETC. CONTRACTOR TO PROTECT REMAINING STRUCTURAL COMPONENTS FROM DAMAGE DURING & AFTER DEMOLITION.
10. REMOVE EXISTING ROOFING COMPONENTS DOWN TO ROOF DECK; CONTRACTOR TO PROTECT EXISTING TRUSSES & ROOF DECK FROM DAMAGE DURING DEMOLITION & AFTER, PROVIDE WEATHER TIGHT PROTECTION UNTIL NEW ROOF CAN BE CONNECTED/DRIED IN.
11. REMOVE EXISTING EXTERIOR WALL FINISHES & BRICK WAINSCOT TO FACE OF STUD.
12. REMOVE EXISTING WALL FRAMING & FINISHES AS REQUIRE TO ACCEPT NEW WINDOW ASSEMBLY.
13. EXISTING TO REMAIN; REFER TO ELECTRICAL BUILDING SIGNAGE LIGHTING.
14. REMOVE EXISTING RAISED FLOOR ASSEMBLY. DASHED LINE INDICATES EXTENTS OF RAISED FLOOR.
15. STRUCTURAL STEEL TO REMAIN, UNLESS OTHERWISE NOTED– SEE STRUCTURAL DRAWINGS.
16. EXISTING HVAC EQUIPMENT– REFER TO MECHANICAL DRAWINGS
17. EXISTING ELECTRICAL EQUIPMENT– REFER TO ELECTRICAL DRAWINGS
18. REMOVE EXISTING SERVER ROOM FIRE PROTECTION EQUIPMENT AND PANEL.
19. REMOVE EXISTING CONCRETE CURB AS REQUIRED– REFER CIVIL DRAWINGS
20. REMOVE EXISTING GUTTER AS REQUIRED.
21. REMOVE EXISTING WALL MOUNTED EXHAUST LOUVER– REFER TO MECHANICAL DRAWINGS
22. REMOVE EXISTING WATER HEATER– REFER TO MECHANICAL DRAWINGS

DEMO NOTES:

1. CONTRACTOR TO COORDINATE REMOVE OF ELECTRICAL ITEMS W/ OWNER'S REPRESENTATIVE FOR POSSIBLE SALVAGE PRIOR TO DEMOLITION/DISPOSAL.
2. ITEMS DECLARED SALVAGEABLE/REUSABLE TO BE PROTECTED FROM HARM DURING DEMOLITION & STORED IN A SAFE/SECURE LOCATION.
3. SALVAGED/REUSED ITEMS TO BE CLEANED/PREPPED TO "LIKE NEW" CONDITION PRIOR TO INSTALLATION.
4. PLUMBING DEMOLITION TO INCLUDE, BUT NOT LIMITED TO REMOVAL OF PLUMBING FIXTURES, SUPPLY, WASTE, & VENT PIPING, ETC.
5. ELECTRICAL DEMOLITION TO INCLUDE, BUT NOT LIMITED TO REMOVAL OF ELECTRICAL CONDUIT, WIRING, FIXTURES, ETC.
6. CONTRACTOR TO COORDINATE THE DEMOLITION & REMOVAL OF FRAMING, WALLS, FLOOR, & CEILING FINISHES, DOORS, WINDOWS, & OTHER ELEMENTS.

A1	DEMO PLAN	B5	NOTES
SCALE: 3/16" = 1'-0"		SCALE: NTS	

© 2021 DAG ARCHITECTS, INC. ALL RIGHTS RESERVED NO PART OF THIS DOCUMENT MAY BE COPIED, REPRODUCED OR TRANSMITTED BY ANY MEANS WITHOUT WRITTEN PERMISSION OF DAG ARCHITECTS, INC. THESE DRAWINGS AND SPECIFICATIONS ARE THE PROPERTY AND COPYRIGHT OF DAG ARCHITECTS, INC. AND SHALL NOT BE USED ON ANY OTHER PROJECT OR LOCATION EXCEPT AS DESCRIBED ON THE DRAWINGS, WITHOUT THE PRIOR WRITTEN AGREEMENT OF DAG ARCHITECTS.

G:\PC Harrison\Projects\2023 Projects\23071 PanCare Clinic Chipley\B-Design\B5-AutoCAD\AD101 Demo Plan.dwg, AD101, 2/8/2024 9:33:25 AM, dbingdon

DAG ARCHITECTS
DAG Architects AR0009694
455 Harrison Ave Suite 1 Panama City, FL 32401
850.387.1671
www.DAGarchitects.com

BID DOCUMENTS

PANCARE OF FLORIDA, INC.
RENOVATIONS & NEW CONSTRUCTION FOR PANCARE CHIPLEY
1440 MAIN ST, CHIPLEY, FL 32428

PANCARE OF FLORIDA, INC.

REVISIONS:

No.	Description	Date

DEMOLITION PLAN

PROJECT NUMBER	23071
DATED	02/05/2023

AD-101

23071
PRELIMINARY REVIEW SET
02/05/2024

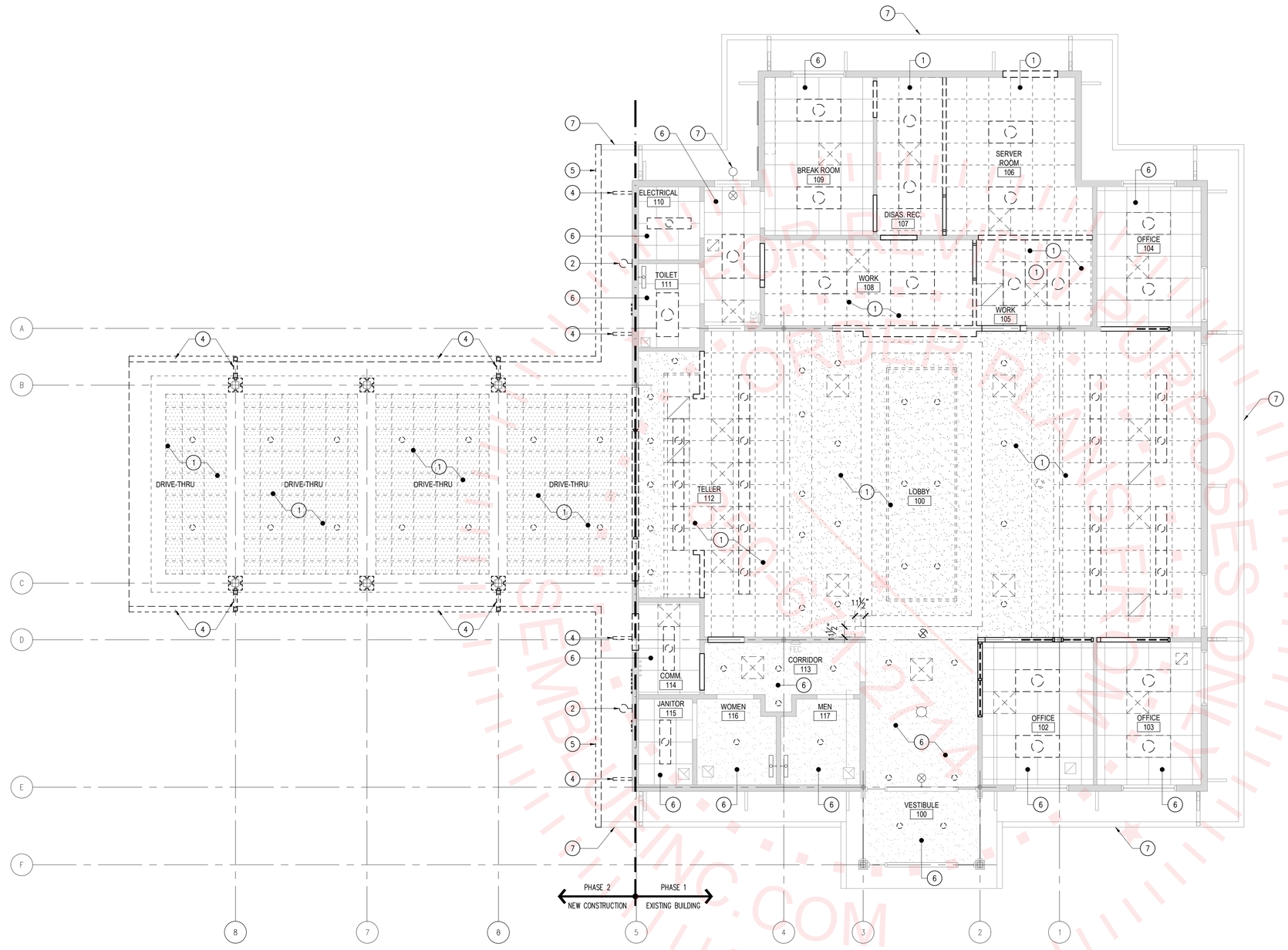

PLAN NORTH

TRUE NORTH

EXPOSED STRUCTURE (NO CEILING) WALLS TO EXTEND TO UNDERSIDE OF STRUCTURE

SUSPENDED ACOUSTICAL CEILING TILE

GYPSUM BOARD CEILING OR SOFFIT

WALL MOUNTED FIXTURE– REFER TO ELECTRICAL DWGS

RECESSED CAN LIGHT– REFER TO ELECTRICAL DWGS

RECESSED 2X4 LIGHT FIXTURE– REFER TO ELECTRICAL DRAWINGS

RECESSED 2x2 LIGHT FIXTURE– REFER TO ELECTRICAL DRAWINGS

SURFACE MOUNTED LED LIGHT FIXTURE– REFER TO ELECTRICAL DRAWINGS

WALL MOUNTED EXIT LIGHT– REFER TO ELECTRICAL DRAWINGS

CEILING MTD. EXIT LIGHT w/DIRECTIONAL ARROW– REFER TO ELECTRICAL DRAWINGS

WALL MOUNTED EXIT LIGHT– REFER TO ELECTRICAL DRAWINGS

HVAC EXHAUST AIR GRILLE– REFER TO MECHANICAL DWGS

HVAC RETURN AIR GRILLE– REFER TO MECHANICAL DWGS

HVAC SUPPLY DIFFUSER– REFER TO MECHANICAL DWGS

C5 | LEGEND

SCALE: NTS

GENERAL RCP NOTES:

1. SEE FINISH SCHEDULE FOR CEILING HEIGHTS.
2. REFER TO ELECTRICAL DOCUMENTS FOR SPECIFIC FIXTURE TYPES.
3. REFER TO MECHANICAL DRAWINGS FOR ADDITIONAL INFORMATION.
4. DASHED LINES INDICATE ITEMS TO BE DEMO'D OR RELOCATED.
5. REFER TO SHEET AD–101 FOR ADDITIONAL INFORMATION.

DEMO KEYNOTES:

1. REMOVE EXISTING CEILING ASSEMBLY, INCLUDING BUT NOT LIMITED TO CEILING FINISHES, LIGHT FIXTURES, MECHANICAL GRILLES/DIFFUSERS; PREP TO ACCEPT NEW WORK.
2. REMOVE EXISTING WALL MOUNTED LIGHT FIXTURE– REFER TO ELECTRICAL DRAWINGS
3. REMOVE SOFFIT MOUNTED LIGHT FIXTURE– REFER TO ELECTRICAL DRAWINGS
4. REMOVE EXISTING BRACKETS– SAVE FOR RE–USE; REFER TO EXTERIOR ELEVATIONS FOR NEW LOCATIONS
5. REMOVE GUTTER/DOWNSPOUT AS REQUIRED
6. EXISTING CEILING TO REMAIN, REPLACE BROKEN &/OR STAINED TILES.
7. EXISTING TO REMAIN

A1 | DEMOLITION REFLECTED CEILING PLAN

SCALE: 3/16" = 1'-0"

A5 | NOTES

SCALE: NTS

DAG ARCHITECTS

DAG Architects AR0009694
455 Harrison Ave Suite I Panama City, FL 32401
850.387.1671
www.DAGarchitects.com

BID DOCUMENTS

PANCARE OF FLORIDA, INC.
RENOVATIONS & NEW CONSTRUCTION FOR PANCARE CHIPLEY
1440 MAIN ST, CHIPLEY, FL 32428

PANCARE OF FLORIDA, INC.

REVISIONS:

No.	Description	Date

DEMOLITION REFLECTED CEILING PLAN

PROJECT NUMBER	23071
DATED	02/05/2023

AD-101.1

© 2021 DAG ARCHITECTS, INC. ALL RIGHTS RESERVED NO PART OF THIS DOCUMENT MAY BE COPIED, REPRODUCED OR TRANSMITTED BY ANY MEANS WITHOUT WRITTEN PERMISSION OF DAG ARCHITECTS, INC. THESE DRAWINGS AND SPECIFICATIONS ARE THE PROPERTY AND COPYRIGHT OF DAG ARCHITECTS, INC. AND SHALL NOT BE USED ON ANY OTHER PROJECT OR LOCATION EXCEPT AS DESCRIBED ON THE DRAWINGS, WITHOUT THE PRIOR WRITTEN AGREEMENT OF DAG ARCHITECTS.

G:\PC Harrison\Projects\2023 Projects\23071 PanCare Clinic Chipley\B-Design\85AutoCAD\AD101.1 Demo RCP.dwg, AD101.1, 2/7/2024 2:55:51 PM, dbragdon

23071
PRELIMINARY REVIEW SET
02/05/2024

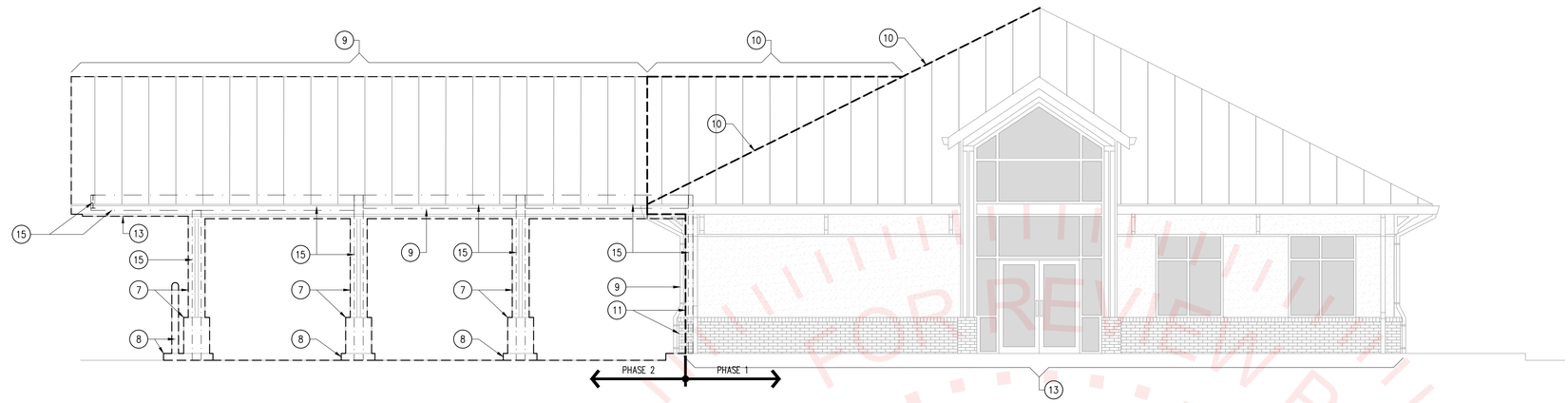

C1 | SOUTH ELEVATION

SCALE: 3/16" = 1'-0"

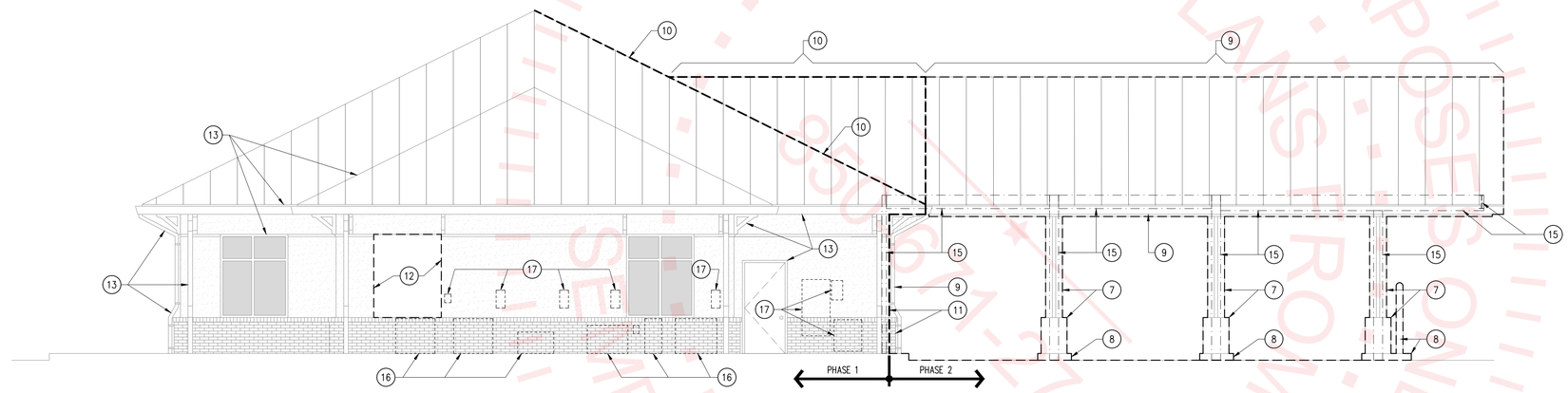

B1 | NORTH ELEVATION

SCALE: 3/16" = 1'-0"

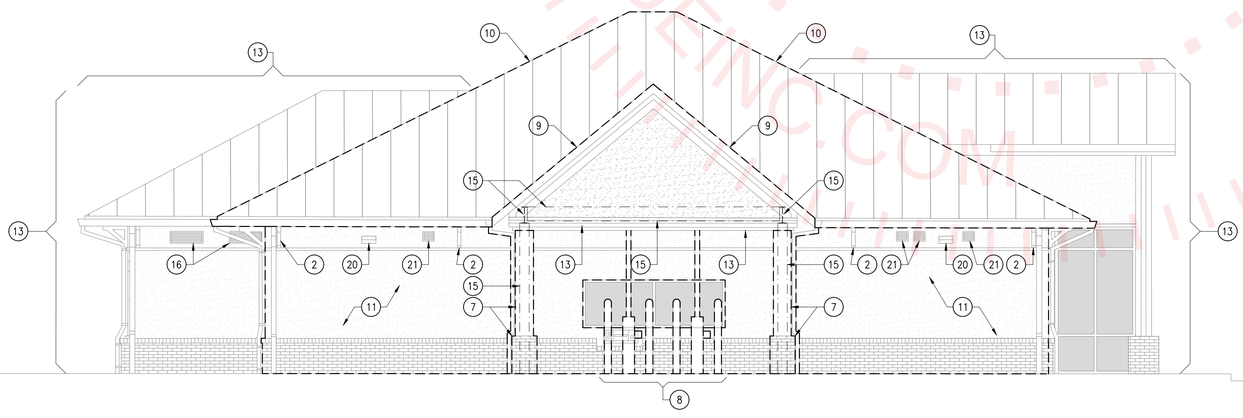

A1 | WEST ELEVATION

SCALE: 3/16" = 1'-0"

DEMO KEYNOTES:

1. REMOVE EXISTING STUD WALL, DOOR, & WINDOW ASSEMBLY AS INDICATED.
2. EXISTING BRACKETS TO BE RELOCATED; REFER TO NEW CONSTRUCTION ELEVATIONS.
3. REMOVE EXISTING CEILING ASSEMBLY, INCLUDING BUT NOT LIMITED TO CEILING FINISHES, LIGHT FIXTURES, MECHANICAL GRILLES/DIFFUSERS; PREP TO ACCEPT NEW WORK.
4. REMOVE EXISTING DOOR & STORE FRONT ASSEMBLY; PATCH & REPAIR TO ACCEPT NEW WORK.
5. REMOVE EXISTING CABINETS & PLUMBING FIXTURES.
6. REMOVE EXISTING MILLWORK/CABINETS & ASSOCIATED EQUIPMENT.
7. REMOVE EXISTING COLUMN WRAP– CONTRACTOR TO PROTECT EXISTING COLUMN FROM HARM.
8. REMOVE EXISTING DRIVE–THRU ISLANDS, INCLUDING BUT NOT LIMITED TO CONCRETE, BOLLARDS, EQUIPMENT, CONDUITS, ETC.
9. REMOVE EXISTING DRIVE–THRU CANOPY, INCLUDING BUT NOT LIMITED TO CANOPY ROOF, TRUSSES, GUTTER, DOWNSPOUT, MISC. ELECTRICAL COMPONENTS, ETC. CONTRACTOR TO PROTECT STRUCTURAL COMPONENTS FROM DAMAGE DURING & AFTER DEMOLITION.
10. PHASE 2: REMOVE EXISTING ROOFING COMPONENTS DOWN TO TRUSSES; CONTRACTOR TO PROTECT EXISTING TRUSSES FROM DAMAGE DURING DEMOLITION & AFTER, PROVIDE WEATHER TIGHT PROTECTION UNTIL NEW ROOF CAN BE CONNECTED/DRIED IN.
11. REMOVE EXISTING EXTERIOR WALL FINISHES & BRICK WAINSCOT TO FACE OF STUD.
12. REMOVE EXISTING WALL FRAMING & FINISHES AS REQUIRE TO ACCEPT NEW WINDOW ASSEMBLY.
13. EXISTING TO REMAIN.
14. REMOVE EXISTING RAISED FLOOR ASSEMBLY.
15. STRUCTURAL STEEL TO REMAIN, UNLESS OTHERWISE NOTED– SEE STRUCTURAL DRAWINGS.
16. EXISTING HVAC EQUIPMENT– REFER TO MECHANICAL DRAWINGS
17. EXISTING ELECTRICAL EQUIPMENT– REFER TO ELECTRICAL DRAWINGS
18. REMOVE EXISTING SERVER ROOM FIRE PROTECTION EQUIPMENT AND PANEL.
19. REMOVE EXISTING CONCRETE CURB AS REQUIRED– REFER CIVIL DRAWINGS
20. REMOVE EXISTING WALL MOUNTED LIGHT FIXTURE– REFER TO ELECTRICAL DRAWINGS
21. REMOVE EXISTING WALL MOUNTED EXHAUST LOUVER– REFER TO MECHANICAL DRAWINGS FOR NEW LOCATIONS

DEMO NOTES:

1. CONTRACTOR TO COORDINATE REMOVE OF ELECTRICAL ITEMS W/ OWNER'S REPRESENTATIVE FOR POSSIBLE SALVAGE PRIOR TO DEMOLITION/DISPOSAL.
2. ITEMS DECLARED SALVAGEABLE/REUSABLE TO BE PROTECTED FROM HARM DURING DEMOLITION & STORED IN A SAFE/SECURE LOCATION.
3. SALVAGED/REUSED ITEMS TO BE CLEANED/PREPPED TO "LIKE NEW" CONDITION PRIOR TO INSTALLATION.
4. PLUMBING DEMOLITION TO INCLUDE, BUT NOT LIMITED TO REMOVAL OF PLUMBING FIXTURES, SUPPLY, WASTE, & VENT PIPING, ETC.
5. ELECTRICAL DEMOLITION TO INCLUDE, BUT NOT LIMITED TO REMOVAL OF ELECTRICAL CONDUIT, WIRING, FIXTURES, ETC.
6. CONTRACTOR TO COORDINATE THE DEMOLITION & REMOVAL OF FRAMING, WALLS, FLOOR, & CEILING FINISHES, DOORS, WINDOWS, & OTHER ELEMENTS.

A5 | NOTES

SCALE: NTS

FOR REVIEW PURPOSES ONLY
NOT FOR CONSTRUCTION
ORDER PLANS FROM
SERVBLUEINC.COM
954-234-2714

© 2021 DAG ARCHITECTS, INC. ALL RIGHTS RESERVED NO PART OF THIS DOCUMENT MAY BE COPIED, REPRODUCED OR TRANSMITTED BY ANY MEANS WITHOUT WRITTEN PERMISSION OF DAG ARCHITECTS, INC. THESE DRAWINGS AND SPECIFICATIONS ARE THE PROPERTY AND COPYRIGHT OF DAG ARCHITECTS, INC. AND SHALL NOT BE USED ON ANY OTHER PROJECT OR LOCATION EXCEPT AS DESCRIBED ON THE DRAWINGS, WITHOUT THE PRIOR WRITTEN AGREEMENT OF DAG ARCHITECTS.

G:\PC Harrison\Projects\2023 Projects\23071 PanCare Clinic Chipley\8-Design\85-AutoCAD\AD201 Demo Elevations.DWG, AD201, 2/7/2024 2:58:05 PM, dbrogdon

DAG ARCHITECTS
DAG Architects AR0009694
455 Harrison Ave Suite 1 Panama City, FL 32401
850.387.1671
www.DAGarchitects.com

BID DOCUMENTS

PANCARE OF FLORIDA, INC.
RENOVATIONS & NEW CONSTRUCTION FOR PANCARE CHIPLEY
1440 MAIN ST, CHIPLEY, FL 32428

PANCARE OF FLORIDA, INC.

REVISIONS:

No.	Description	Date

DEMOLITION ELEVATIONS

PROJECT NUMBER	23071
DATED	02/05/2023

AD-201

23071
PRELIMINARY REVIEW SET
02/05/2024

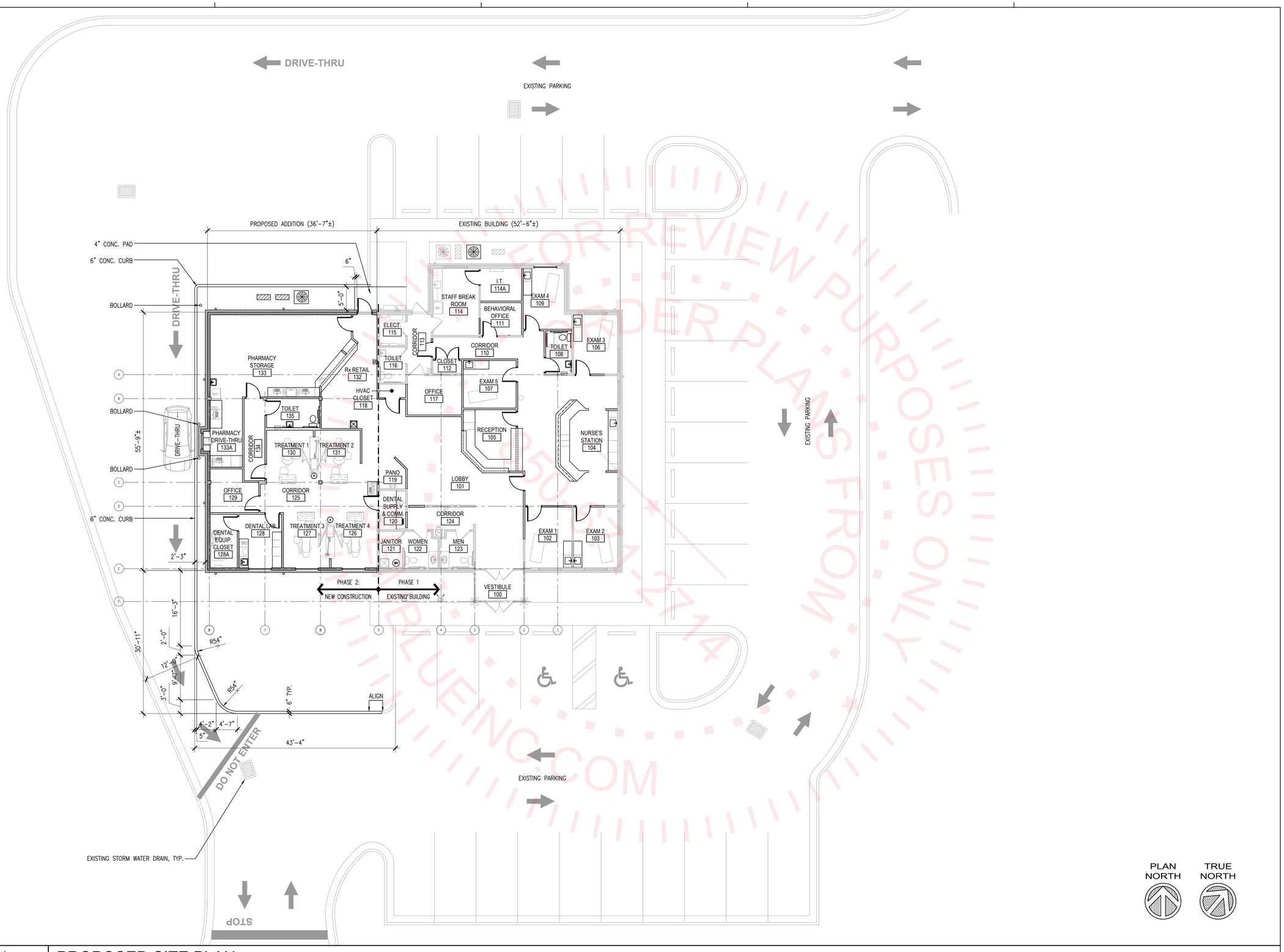

FOR REVIEW PURPOSES ONLY
FROM: 850.234.2214
BLUEINC.COM

A1	PROPOSED SITE PLAN
SCALE: 1" = 10'-0"	

© 2021 DAG ARCHITECTS, INC. ALL RIGHTS RESERVED NO PART OF THIS DOCUMENT MAY BE COPIED, REPRODUCED OR TRANSMITTED BY ANY MEANS WITHOUT WRITTEN PERMISSION OF DAG ARCHITECTS, INC. THESE DRAWINGS AND SPECIFICATIONS ARE THE PROPERTY AND COPYRIGHT OF DAG ARCHITECTS, INC. AND SHALL NOT BE USED ON ANY OTHER PROJECT OR LOCATION EXCEPT AS DESCRIBED ON THE DRAWINGS. WITHOUT THE PRIOR WRITTEN AGREEMENT OF DAG ARCHITECTS.

G:\PC Harrison\Projects\2023 Projects\23071 PanCare Clinic Chipley\B-Design\B5AutocCAD\A100 Site Plan.dwg, A100, 2/6/2024 9:42:47 AM, dbrogdon

DAG ARCHITECTS
DAG Architects AR0009694
455 Harrison Ave Suite I Panama City, FL 32401
850.387.1671
www.DAGarchitects.com

BID DOCUMENTS

PANCARE OF FLORIDA, INC.
RENOVATIONS & NEW CONSTRUCTION FOR PANCARE CHIPLEY
1440 MAIN ST, CHIPLEY, FL 32428

PANCARE OF FLORIDA, INC.

REVISIONS:

No.	Description	Date

SITE PLAN

PROJECT NUMBER	23071
DATED	02/05/2023

A-100

23071
PRELIMINARY REVIEW SET
02/05/2024

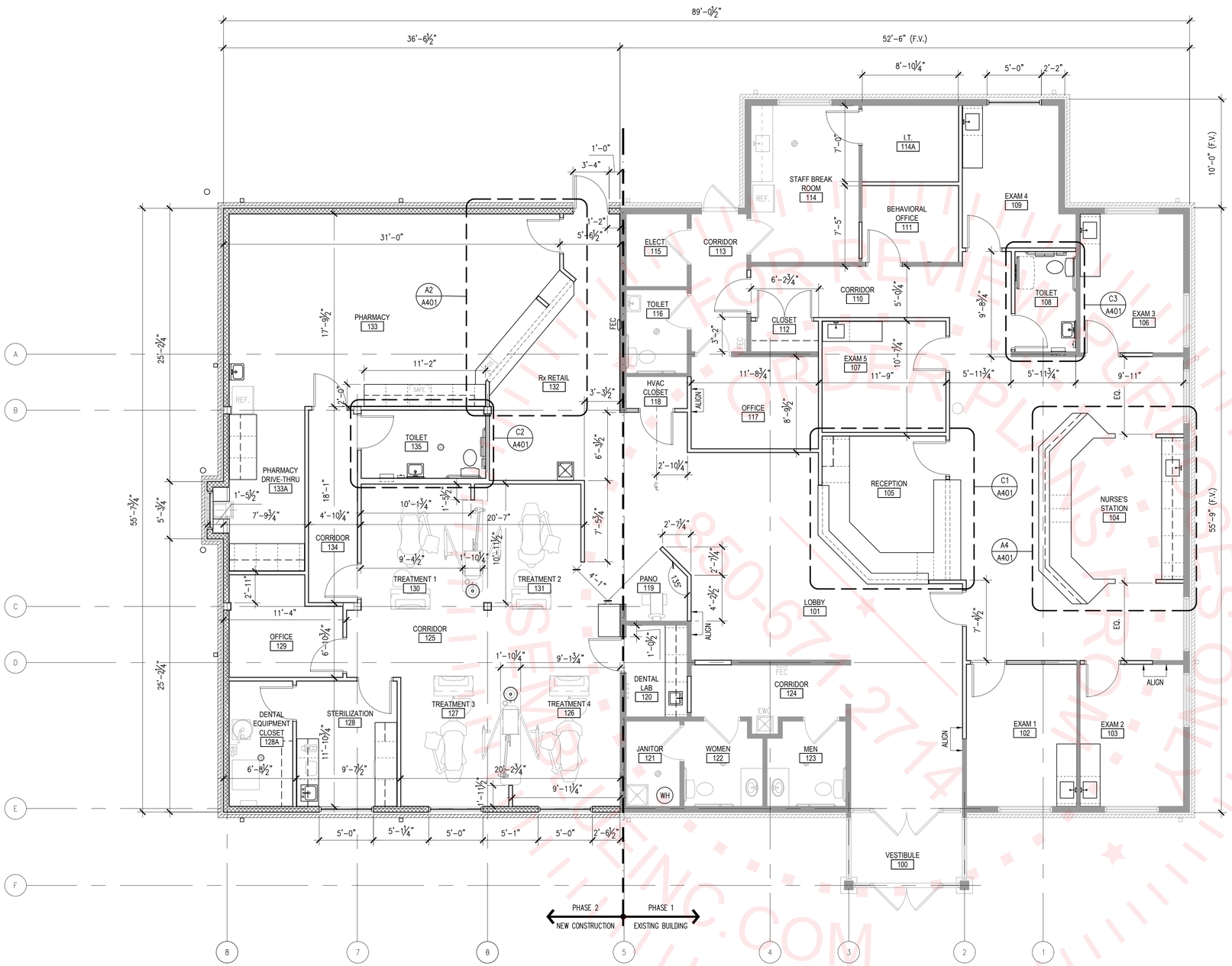

© 2021 DAG ARCHITECTS, INC. ALL RIGHTS RESERVED NO PART OF THIS DOCUMENT MAY BE COPIED, REPRODUCED OR TRANSMITTED BY ANY MEANS WITHOUT WRITTEN PERMISSION OF DAG ARCHITECTS, INC. THESE DRAWINGS AND SPECIFICATIONS ARE THE PROPERTY AND COPYRIGHT OF DAG ARCHITECTS, INC. AND SHALL NOT BE USED ON ANY OTHER PROJECT OR LOCATION EXCEPT AS DESCRIBED ON THE DRAWINGS, WITHOUT THE PRIOR WRITTEN AGREEMENT OF DAG ARCHITECTS.

G:\PC Harrison\Projects\2023 Projects\23071 PanCare Clinic Chipley\B Design\BSAutoCAD\A101.1 Dimension Plan.dwg, A101.1, 2/8/2024 9:47:13 AM, dlongdon

PLAN NORTH

TRUE NORTH

A1	DIMENSION PLAN
SCALE: 3/16" = 1'-0"	

DAG ARCHITECTS
DAG Architects AR0009694
455 Harrison Ave Suite I Panama City, FL 32401
850.387.1671
www.DAGarchitects.com

BID DOCUMENTS

PANCARE OF FLORIDA, INC.
RENOVATIONS & NEW CONSTRUCTION FOR PANCARE CHIPLEY
1440 MAIN ST, CHIPLEY, FL 32428

PANCARE OF FLORIDA, INC.

REVISIONS:

No.	Description	Date

DIMENSION PLAN

PROJECT NUMBER	23071
DATED	02/05/2023

A-101.1

23071
PRELIMINARY REVIEW SET
02/05/2024

FLOORING

SEALED CONCRETE (SC):

LUXURY VINYL TILE (LVT):

TILE: (TILE)

TILE: (EX-T) EXISTING TILE TO REMAIN

NOTES:

1. VERIFY FINAL FLOOR FINISHES WITH OWNER'S REPRESENTATIVE PRIOR TO CONSTRUCTION / PURCHASE OF MATERIALS
2. VERIFY FINAL FLOOR FINISH COLORS WITH OWNER'S REPRESENTATIVE PRIOR TO CONSTRUCTION / PURCHASE OF MATERIALS

C5	LEGEND & NOTES
SCALE: NTS	

PLAN NORTH

TRUE NORTH

A1	FINISH PLAN
SCALE: 3/16" = 1'-0"	

© 2021 DAG ARCHITECTS, INC. ALL RIGHTS RESERVED NO PART OF THIS DOCUMENT MAY BE COPIED, REPRODUCED OR TRANSMITTED BY ANY MEANS WITHOUT WRITTEN PERMISSION OF DAG ARCHITECTS, INC. THESE DRAWINGS AND SPECIFICATIONS ARE THE PROPERTY AND COPYRIGHT OF DAG ARCHITECTS, INC. AND SHALL NOT BE USED ON ANY OTHER PROJECT OR LOCATION EXCEPT AS DESCRIBED ON THE DRAWINGS, WITHOUT THE PRIOR WRITTEN AGREEMENT OF DAG ARCHITECTS.

G:\PC Harrison\Projects\2023 Projects\23071 PanCare Clinic Chipley\B-Design\BS\AutoCAD\A101.2 Finish Plan.dwg, A101.2, 2/7/2024 2:41:26 PM, dbroegdon

DAG ARCHITECTS
DAG Architects AR0009694
455 Harrison Ave Suite I Panama City, FL 32401
850.387.1671
www.DAGarchitects.com

BID DOCUMENTS

PANCARE OF FLORIDA, INC.
RENOVATIONS & NEW CONSTRUCTION FOR PANCARE CHIPLEY
1440 MAIN ST, CHIPLEY, FL 32428

PANCARE OF FLORIDA, INC.

REVISIONS:

No.	Description	Date

FINISH PLAN

PROJECT NUMBER	23071
DATED	02/05/2023

A-101.2

23071
PRELIMINARY REVIEW SET
02/05/2024

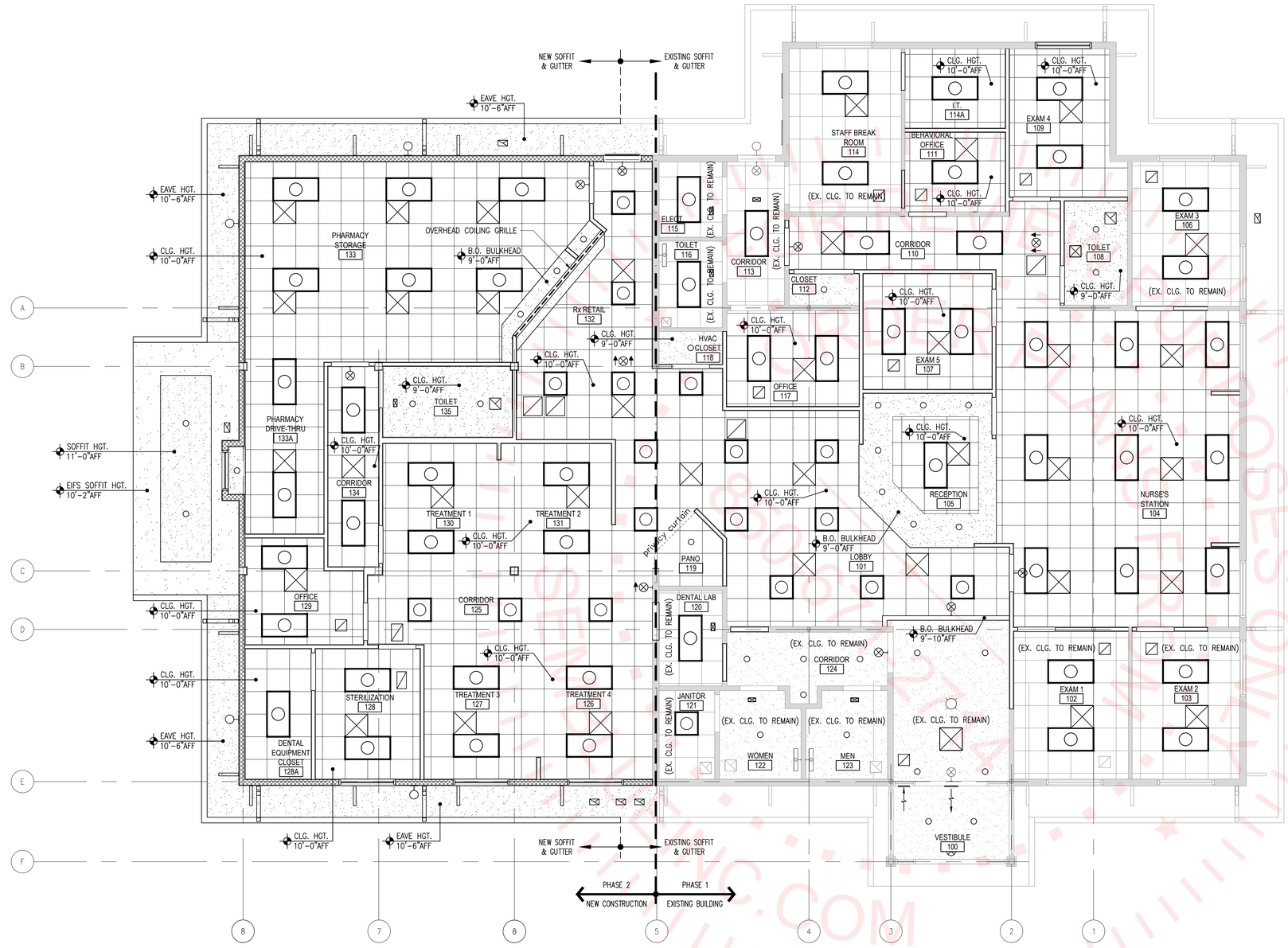

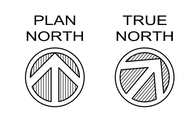

A1	REFLECTED CEILING PLAN
SCALE: 3/16" = 1'-0"	

EXPOSED STRUCTURE (NO CEILING) WALLS TO EXTEND TO UNDERSIDE OF STRUCTURE

SUSPENDED ACOUSTICAL CEILING TILE

GYPSUM BOARD CEILING (INTERIOR) OR FIBER CEMENT SOFFIT (EXTERIOR)

EIFS SOFFIT (EXTERIOR)

WALL MOUNTED FIXTURE– REFER TO ELECTRICAL DWGS

RECESSED CAN LIGHT– REFER TO ELECTRICAL DWGS

RECESSED 2X4 LIGHT FIXTURE– REFER TO ELECTRICAL DRAWINGS

RECESSED 2x2 LIGHT FIXTURE– REFER TO ELECTRICAL DRAWINGS

SURFACE MOUNTED LED LIGHT FIXTURE– REFER TO ELECTRICAL DRAWINGS

WALL MOUNTED EXIT LIGHT– REFER TO ELECTRICAL DRAWINGS

CEILING MTD. EXIT LIGHT w/DIRECTIONAL ARROW– REFER TO ELECTRICAL DRAWINGS

HVAC EXHAUST AIR GRILLE– REFER TO MECHANICAL DWGS

HVAC RETURN AIR GRILLE– REFER TO MECHANICAL DWGS

HVAC SUPPLY DIFFUSER– REFER TO MECHANICAL DWGS

C5	LEGEND
SCALE: NTS	

GENERAL NOTES

1. SEE FINISH SCHEDULE FOR CEILING HEIGHTS.
2. REFER TO ELECTRICAL DOCUMENTS FOR SPECIFIC FIXTURE TYPES.
3. REFER TO MECHANICAL DRAWINGS FOR ADDITIONAL INFORMATION.

BASIS OF DESIGN

OVERHEAD COILING GRILLE:

A5	NOTES
SCALE: NTS	

DAG ARCHITECTS
DAG Architects AR0009694
455 Harrison Ave Suite I Panama City, FL 32401
850.387.1671
www.DAGarchitects.com

BID DOCUMENTS

PANCARE OF FLORIDA, INC.
RENOVATIONS & NEW CONSTRUCTION FOR PANCARE CHIPLEY
1440 MAIN ST, CHIPLEY, FL 32428

PANCARE OF FLORIDA, INC.

REVISIONS:

No.	Description	Date

REFLECTED CEILING PLAN

PROJECT NUMBER	23071
DATED	02/05/2023

A-101.3

© 2021 DAG ARCHITECTS, INC. ALL RIGHTS RESERVED NO PART OF THIS DOCUMENT MAY BE COPIED, REPRODUCED OR TRANSMITTED BY ANY MEANS WITHOUT WRITTEN PERMISSION OF DAG ARCHITECTS, INC. THESE DRAWINGS AND SPECIFICATIONS ARE THE PROPERTY AND COPYRIGHT OF DAG ARCHITECTS, INC. AND SHALL NOT BE USED ON ANY OTHER PROJECT OR LOCATION EXCEPT AS DESCRIBED ON THE DRAWINGS. WITHOUT THE PRIOR WRITTEN AGREEMENT OF DAG ARCHITECTS.

C:\PC Harrison\Projects\2023 Projects\23071 PanCare Clinic Chipley\B-Design\BSAutoCAD\A-A101.3 RCP.dwg, A101.3, 2/7/2024 2:44:38 PM, dbrogdon

23071
PRELIMINARY REVIEW SET
02/05/2024

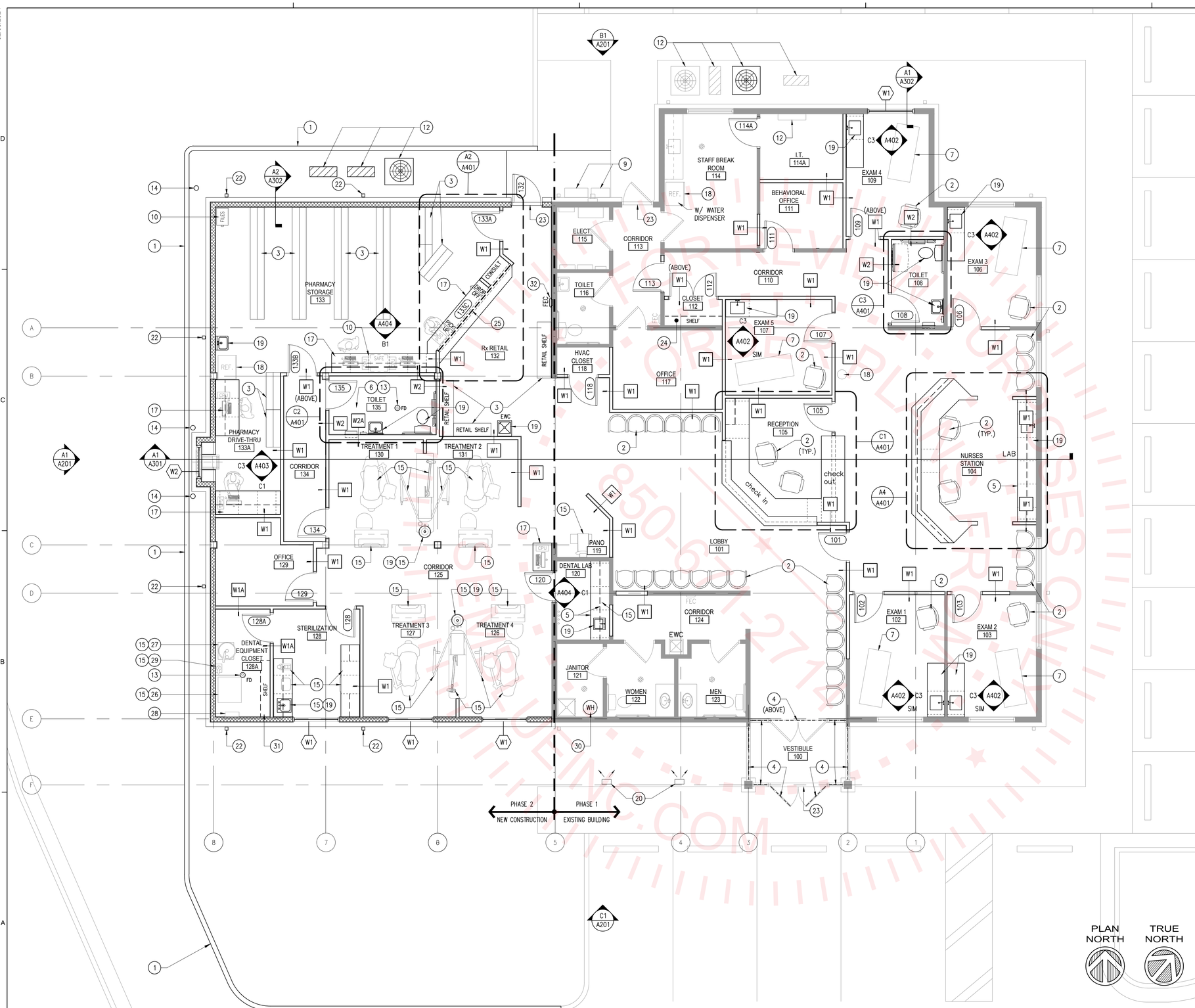

KEYNOTES:

1. RAISED 6" CONCRETE CURB.
2. OWNER FURNISHED / OWNER INSTALLED FURNITURE, SHOWN FOR REFERENCE ONLY.
3. OWNER FURNISHED / CONTRACTOR INSTALLED SHELVING, SHOWN FOR REFERENCE ONLY.
4. TINT ALL WINDOWS @ VESTIBULE #100
5. BASE AND UPPER CABINETS– SEE SPECS.
6. FLOOR SLOPES TO FLOOR DRAIN, COORDINATE FLOORING THICKNESS WITH FLOOR DRAIN INSTALLATION, SEE DETAIL A3/A331.
7. OWNER PROVIDED / CONTRACTOR INSTALLED EXAM TABLE
9. ELECTRICAL EQUIPMENT, SEE ELECTRICAL DRAWINGS.
10. OWNER FURNISHED / CONTRACTOR INSTALLED OFFICE EQUIPMENT
11. OWNER FURNISHED / CONTRACTOR INSTALLED DENTAL CASEWORK
12. HVAC UNIT/ EQUIPMENT – REFER TO MECHANICAL DRAWINGS.
13. FLOOR DRAIN– REFER TO PLUMBING DRAWINGS.
14. STEEL PIPE BOLLARD – REFER TO A3/A310 FOR INFORMATION AND DETAILS
15. VENDOR FURNISHED EQUIPMENT & MILLWORK. REFER TO VENDOR DRAWINGS ADDITIONAL INFORMATION. VENDOR: PATTERSON DENTAL, 1031 MENDOTA HEIGHTS RD., MENDOTA HEIGHTS, MN P.O.C. GABRIEL ANAYA, PH. 850–860–6317
17. STANDING LEVEL WORK SURFACE, SEE ELEVATIONS.
18. APPLIANCE– PROVIDED BY OWNER, INSTALLED BY CONTRACTOR; REFER TO MANUF. SPECS FOR INSTALLATION REQUIREMENTS PRIOR TO BEGINNING WORK.
19. PLUMBING FIXTURES – REFER TO PLUMBING DRAWINGS.
20. EXTERIOR SIGNAGE LIGHTING– REFER TO ELECTRICAL DRAWINGS
22. PRE–FINISHED ALUMINUM DOWNSPOUT
23. FLOORING TRANSITION
24. 12" DEEP CLOSET SHELF @ 5'–6"AFF
25. OVERHEAD COILING SECURITY GRILLE. BASIS OF DESIGN: OVERHEAD DOOR CO., MODEL #670, MANUAL OPERATION, MILL FINISH, LENGTH & HEIGHT PER PLANS.
26. DENTAL AIR COMPRESSOR
27. DENTAL VACUUM PUMP
28. DENTAL WATER FILTER MANIFOLD
29. DENTAL AMALGAM SEPARATOR
30. WATER HEATER– REFER TO PLUMBING DRAWINGS
31. 12" DEEP SHELVING
32. RECESSED FIRE EXTINGUISHER CABINET

WALL / PARTITION NOTES

1. ALL WALLS ARE TO BE WALL TYPE W–1, UNLESS NOTED OTHERWISE (U.N.O.) AND ARE UNTAGGED. WALLS CONSTRUCTED DIFFERENTLY ARE TAGGED (x).
2. SEAL WALL JOINTS AND AT THE ROOF DECK TO ENSURE ACOUSTICAL INTEGRITY (ALL WALLS) AND FIRE RATING (WHERE REQUIRED).
3. BRACE ALL WALLS THAT TERMINATE AT 6" ABOVE CEILINGS.
4. STENCIL ABOVE CEILING ON BOTH SIDES OF ALL FIRE RATED WALLS 3" HIGH LETTERING TO READ "FIRE BARRIER– PROTECT ALL OPENINGS".
5. ALL ROOMS WITHOUT CEILING HAVE FINISHED, PAINTED GYPSUM BOARD FROM TOP OF SLAB TO BOTTOM OF DECK.
6. ALL DOORS ARE TO BE 6" OFF OF PERPENDICULAR WALL U.N.O.

GENERAL NOTES

1. SEE SITE, CIVIL, ELEC, AND MECH FOR ADDITIONAL WORK.
2. PROVIDE ½" PLYWOOD BACKING AT ALL WALL MOUNTED UPPER CABINETS, WALL MOUNTED ACCESSORIES, EXTERIOR BUILDING SIGNAGE, AND TV'S.

DAG ARCHITECTS
DAG Architects AR0009694
455 Harrison Ave Suite I Panama City, FL 32401
850.387.1671
www.DAGarchitects.com

BID DOCUMENTS

PANCARE OF FLORIDA, INC.
RENOVATIONS & NEW CONSTRUCTION FOR PANCARE CHIPLEY
1440 MAIN ST, CHIPLEY, FL 32428

PANCARE OF FLORIDA, INC.

REVISIONS:

No.	Description	Date

FLOOR PLAN

PROJECT NUMBER	23071
DATED	02/05/2023

A-101

A1	FLOOR PLAN	A5	NOTES
SCALE: 3/16" = 1'-0"		SCALE: NTS	

© 2021 DAG ARCHITECTS, INC. ALL RIGHTS RESERVED. NO PART OF THIS DOCUMENT MAY BE COPIED, REPRODUCED OR TRANSMITTED BY ANY MEANS WITHOUT WRITTEN PERMISSION OF DAG ARCHITECTS, INC. THESE DRAWINGS AND SPECIFICATIONS ARE THE PROPERTY AND COPYRIGHT OF DAG ARCHITECTS, INC. AND SHALL NOT BE USED ON ANY OTHER PROJECT OR LOCATION EXCEPT AS DESCRIBED ON THE DRAWINGS, WITHOUT THE PRIOR WRITTEN AGREEMENT OF DAG ARCHITECTS.

G:\PC Harrison\Projects\23071 PanCare Clinic Chipley\B-Design\BSAutoCAD\A-101 Floor Plan.dwg, A101, 2/7/2024 2:36:53 PM, dbrogdon

23071
PRELIMINARY REVIEW SET
02/05/2024

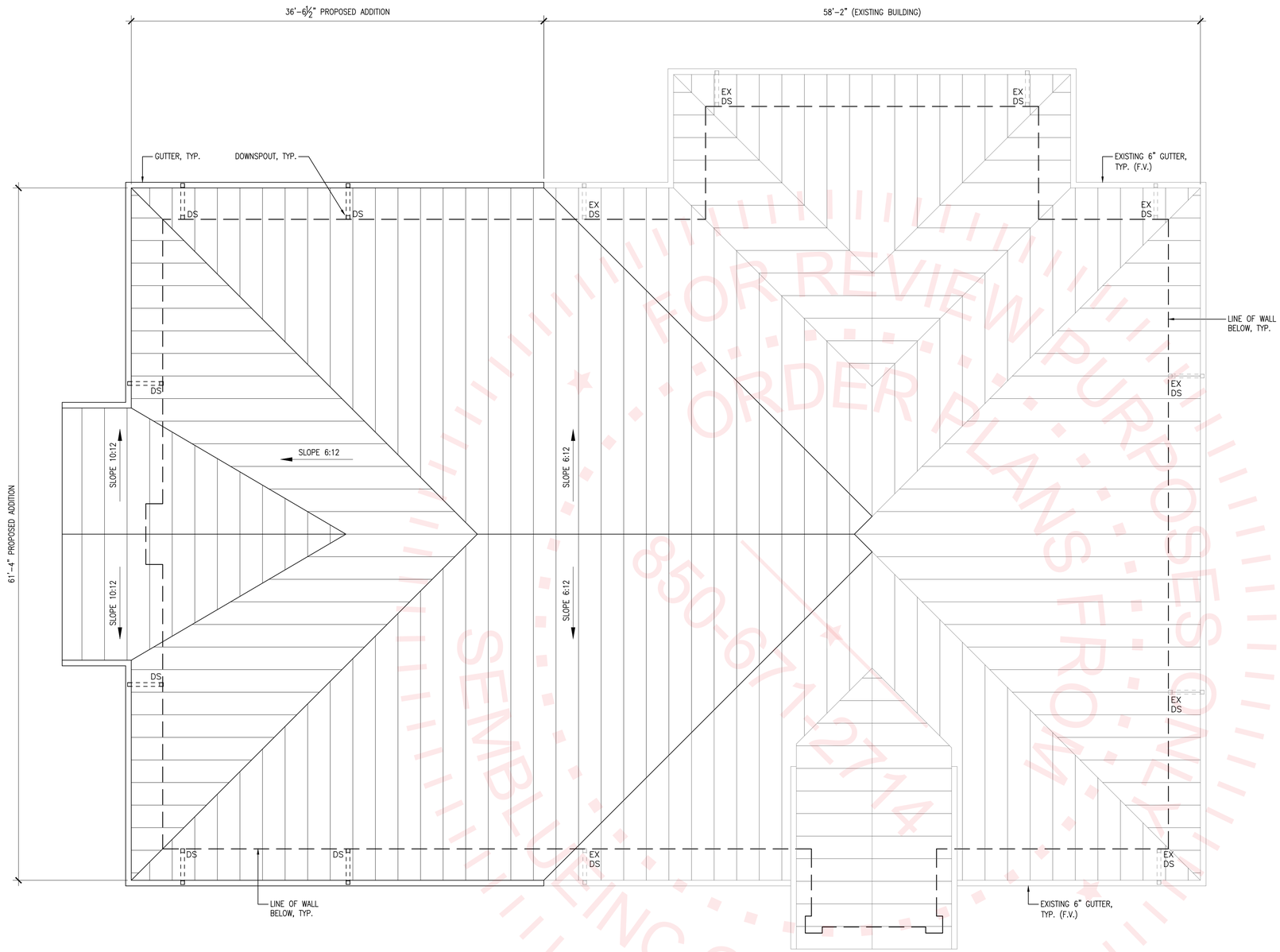

FOR REVIEW PURPOSES ONLY
NOT FOR CONSTRUCTION
850-671-2714
SEMBLUEINC.COM

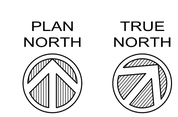

GENERAL NOTES

1. ROOFING PANELS AND ACCESSORIES BY BY METAL BUILDING MANUFACTURER.
2. PROVIDE CRICKETS AT VENTS, AND MANUFACTURER'S STANDARD FLASHING AND TRIM AS REQUIRED FOR ROOF PENETRATIONS, FANS, ETC. SEE MEP SHEETS FOR LOCATIONS.
3. PROVIDE ROOF INSULATION ASSEMBLY R-VALUE: R-29 MIN. (APPROX. 5")
4. GUTTER SIZE TO MATCH EXISTING.
5. DOWNSPOUT SIZE TO MATCH EXISTING, 3"x4" MINIMUM.

BASIS OF DESIGN

STANDING SEAM METAL ROOF:
MANUFACTURER – MBCI
COLOR & STYLE – MATCH EXISTING

A1	ROOF PLAN
SCALE: 3/16" = 1'-0"	

A5	NOTES
SCALE: NTS	

DAG ARCHITECTS
DAG Architects AR0009694
455 Harrison Ave Suite I Panama City, FL 32401
850.387.1671
www.DAGarchitects.com

BID DOCUMENTS

PANCARE OF FLORIDA, INC.
RENOVATIONS & NEW CONSTRUCTION FOR PANCARE CHIPLEY
1440 MAIN ST, CHIPLEY, FL 32428

PANCARE OF FLORIDA, INC.

REVISIONS:

No.	Description	Date

ROOF PLAN

PROJECT NUMBER	23071
DATED	02/05/2023

A-102

© 2021 DAG ARCHITECTS, INC. ALL RIGHTS RESERVED NO PART OF THIS DOCUMENT MAY BE COPIED, REPRODUCED OR TRANSMITTED BY ANY MEANS WITHOUT WRITTEN PERMISSION OF DAG ARCHITECTS, INC. THESE DRAWINGS AND SPECIFICATIONS ARE THE PROPERTY AND COPYRIGHT OF DAG ARCHITECTS, INC. AND SHALL NOT BE USED ON ANY OTHER PROJECT OR LOCATION EXCEPT AS DESCRIBED ON THE DRAWINGS, WITHOUT THE PRIOR WRITTEN AGREEMENT OF DAG ARCHITECTS.

G:\PC Harrison\Projects\2023 Projects\23071 PanCare Clinic Chipley\9-Design\BSAutoCAD\A-102 Roof Plan.dwg, A102, 2/7/2024 2:45:04 PM, dbrogdon

23071
PRELIMINARY REVIEW SET
02/05/2024

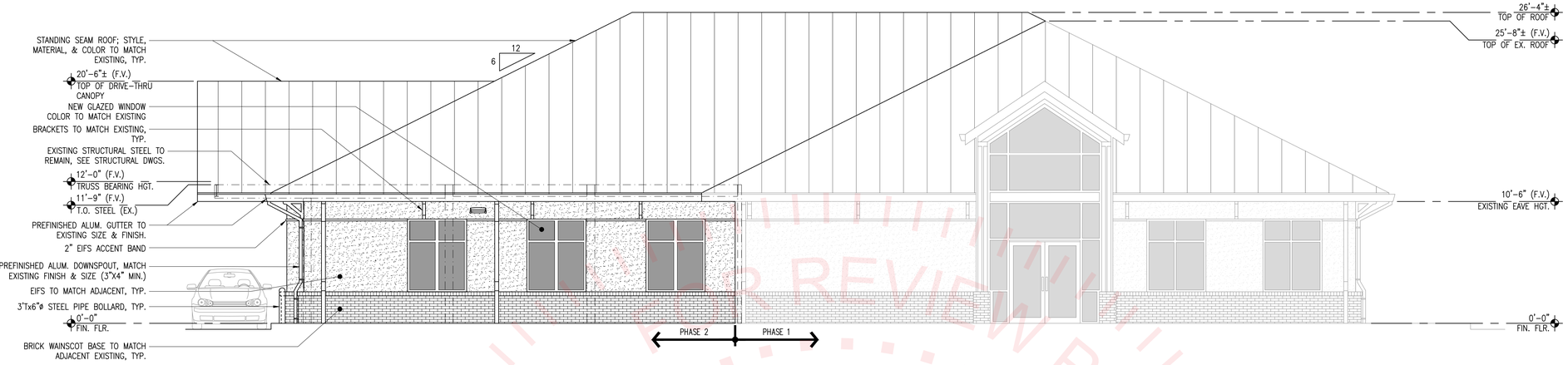

C1 SOUTH ELEVATION

SCALE: 3/16" = 1'-0"

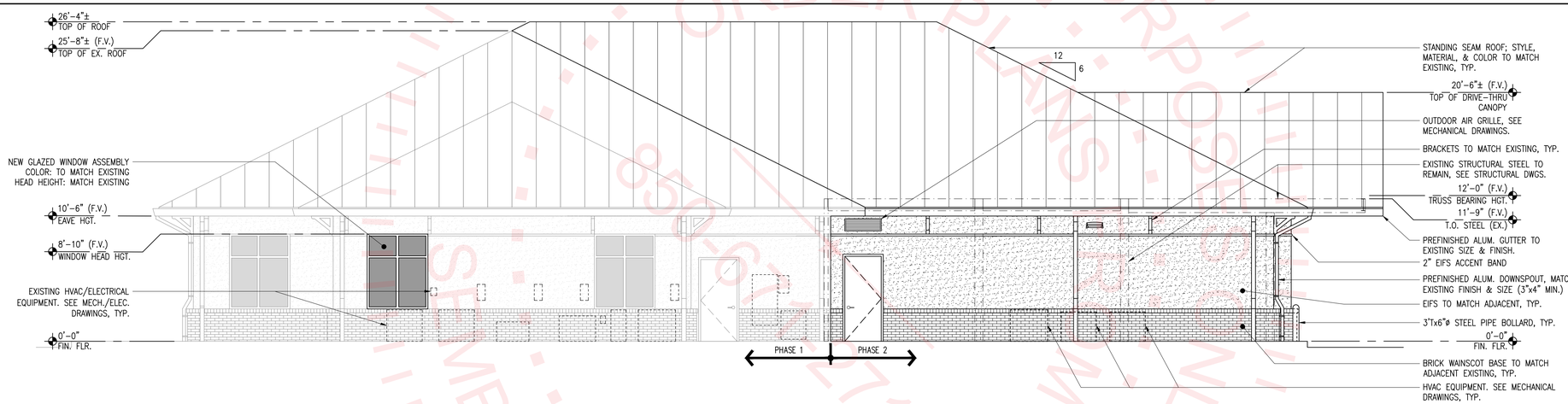

B1 NORTH ELEVATION

SCALE: 3/16" = 1'-0"

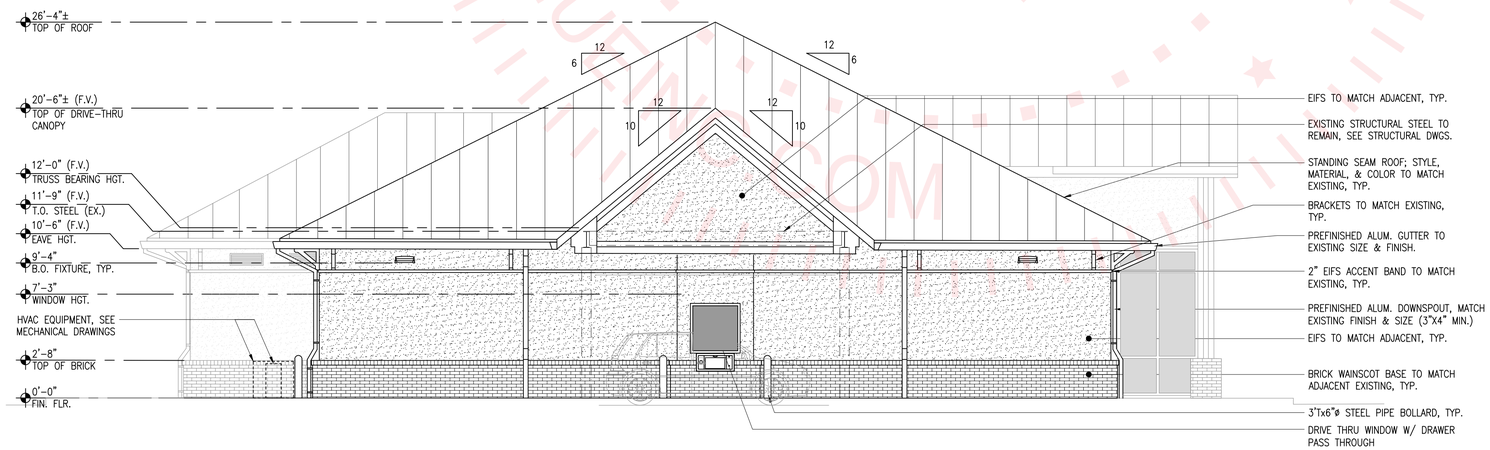

A1 WEST ELEVATION

SCALE: 3/16" = 1'-0"

© 2021 DAG ARCHITECTS, INC. ALL RIGHTS RESERVED NO PART OF THIS DOCUMENT MAY BE COPIED, REPRODUCED OR TRANSMITTED BY ANY MEANS WITHOUT WRITTEN PERMISSION OF DAG ARCHITECTS, INC. THESE DRAWINGS AND SPECIFICATIONS ARE THE PROPERTY AND COPYRIGHT OF DAG ARCHITECTS, INC. AND SHALL NOT BE USED ON ANY OTHER PROJECT OR LOCATION EXCEPT AS DESCRIBED ON THE DRAWINGS, WITHOUT THE PRIOR WRITTEN AGREEMENT OF DAG ARCHITECTS.

G:\PC Harrison\Projects\2023 Projects\23071 PanCare Clinic Chipley\B-Design\BSAutoCAD\AA201 Elevations.DWG, A201, 2/7/2024-4:14:54 PM, dbrogdon

DAG ARCHITECTS
DAG Architects AR0009694
455 Harrison Ave Suite 1 Panama City, FL 32401
850.387.1671
www.DAGarchitects.com

BID DOCUMENTS

PANCARE OF FLORIDA, INC.
RENOVATIONS & NEW CONSTRUCTION FOR PANCARE CHIPLEY
1440 MAIN ST, CHIPLEY, FL 32428

PANCARE OF FLORIDA, INC.

REVISIONS:

No.	Description	Date

ELEVATIONS

PROJECT NUMBER	23071
DATED	02/05/2023

A-201

23071
PRELIMINARY REVIEW SET
02/05/2024

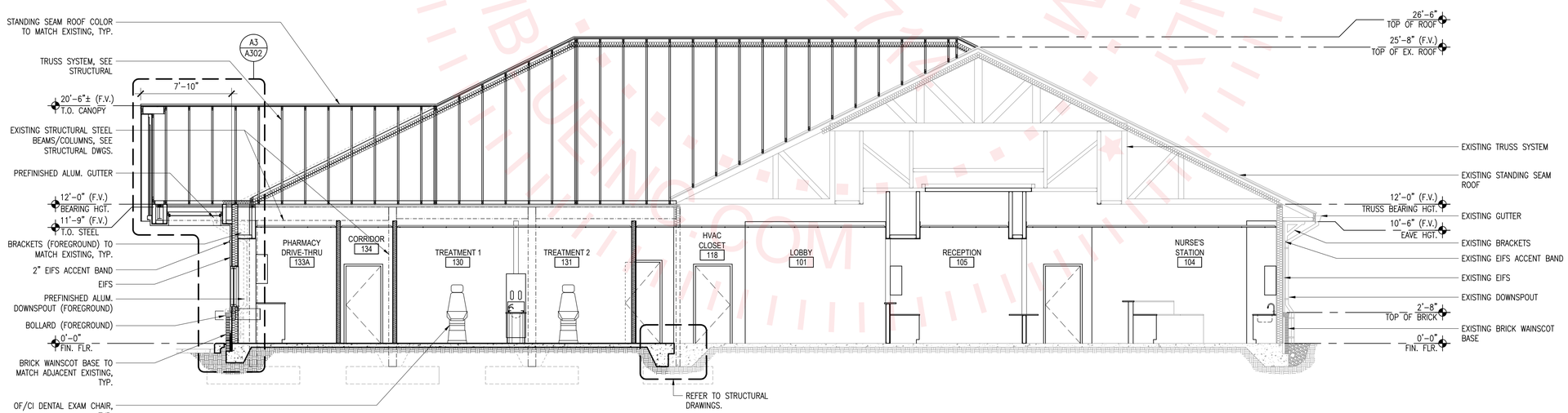

A1	BUILDING SECTION
SCALE: 3/16" = 1'-0"	EAST - WEST

© 2021 DAG ARCHITECTS, INC. ALL RIGHTS RESERVED NO PART OF THIS DOCUMENT MAY BE COPIED, REPRODUCED OR TRANSMITTED BY ANY MEANS WITHOUT WRITTEN PERMISSION OF DAG ARCHITECTS, INC. THESE DRAWINGS AND SPECIFICATIONS ARE THE PROPERTY AND COPYRIGHT OF DAG ARCHITECTS, INC. AND SHALL NOT BE USED ON ANY OTHER PROJECT OR LOCATION EXCEPT AS DESCRIBED ON THE DRAWINGS, WITHOUT THE PRIOR WRITTEN AGREEMENT OF DAG ARCHITECTS.

FOR REVIEW PURPOSES ONLY
ORDER PLANS FROM:
SEMBUILDING.COM
850-671-2775

DAG ARCHITECTS
DAG Architects AR0009694
455 Harrison Ave Suite I Panama City, FL 32401
850.387.1671
www.DAGarchitects.com

BID DOCUMENTS

PANCARE OF FLORIDA, INC.
RENOVATIONS & NEW CONSTRUCTION FOR PANCARE CHIPLEY
1440 MAIN ST, CHIPLEY, FL 32428

PANCARE OF FLORIDA, INC.

REVISIONS:		
No.	Description	Date

BUILDING SECTION

PROJECT NUMBER	23071
DATED	02/05/2023

A-301

G:\PC Harrison\Projects\23071 PanCare Clinic Chipley\9-Design\BSAutoCAD\A-301 Building Section.DWG, A301, 2/7/2024 4:15:37 PM, dbrogdon

23071
PRELIMINARY REVIEW SET
02/05/2024

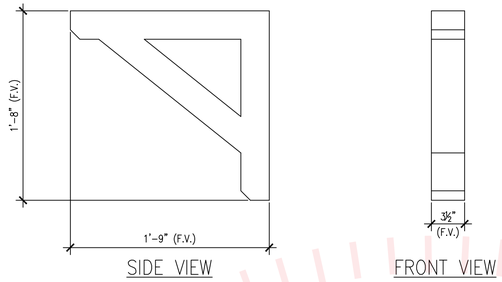

NOTE:
BRACKET DETAIL SHOWN IS GENERIC IN NATURE. INTENT IS TO MATCH EXISTING BRACKETS IN DESIGN & SIZE.

D2 BRACKET DETAIL

SCALE: 1-1/2" = 1'-0" | TYPICAL @ EXTERIOR WALLS

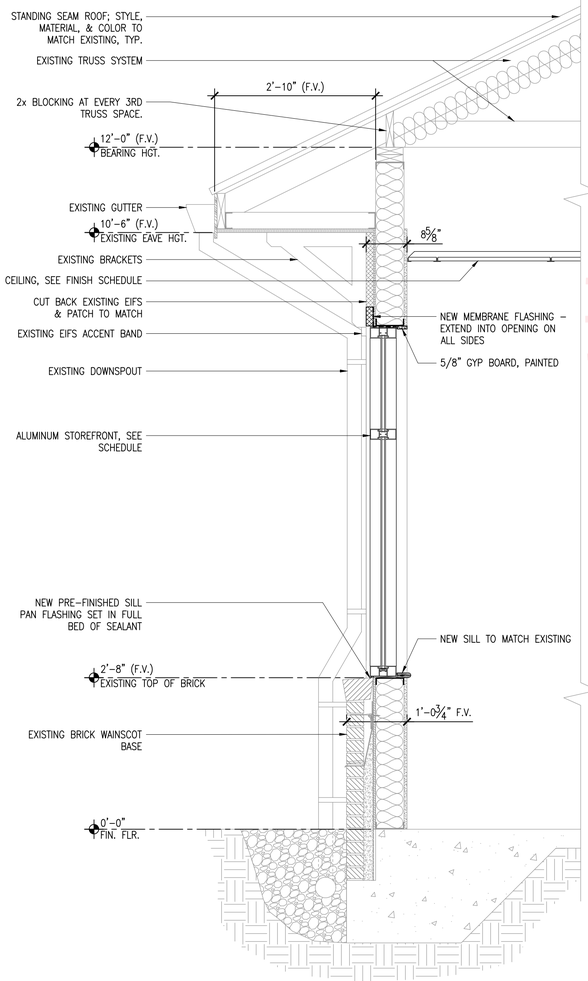

A1 WALL SECTION

SCALE: 3/4" = 1'-0" | NEW STOREFRONT @ EXISTING EXTERIOR WALL

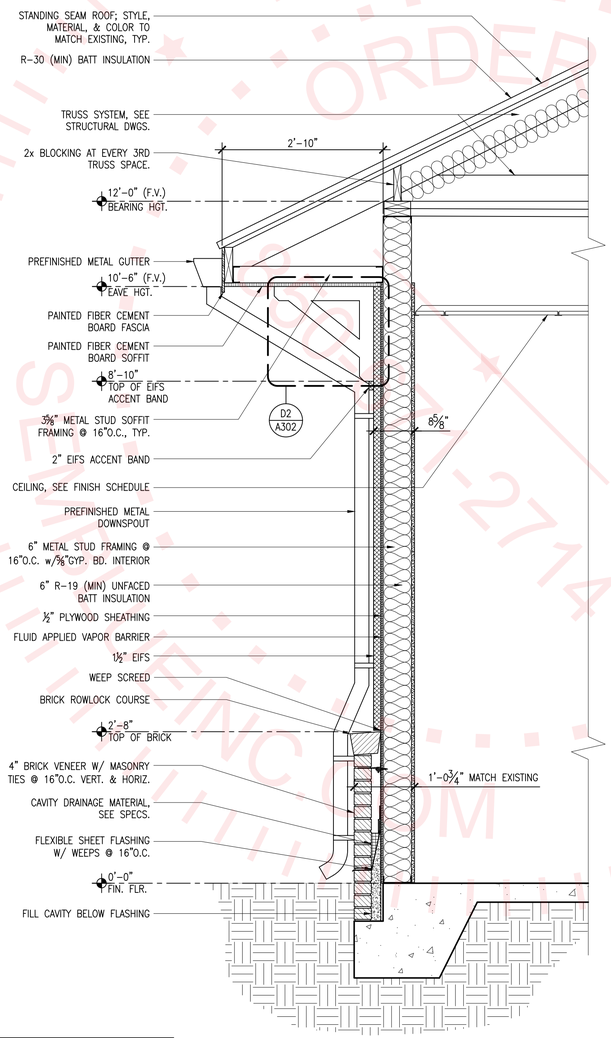

NOTE: PROVIDE DRAINAGE DEVICES PER MANUFACTURER RECOMMENDATION. BACKWRAP 2" MIN. @ ALL EDGES

A2 WALL SECTION

SCALE: 3/4" = 1'-0" | NEW EXTERIOR WALL

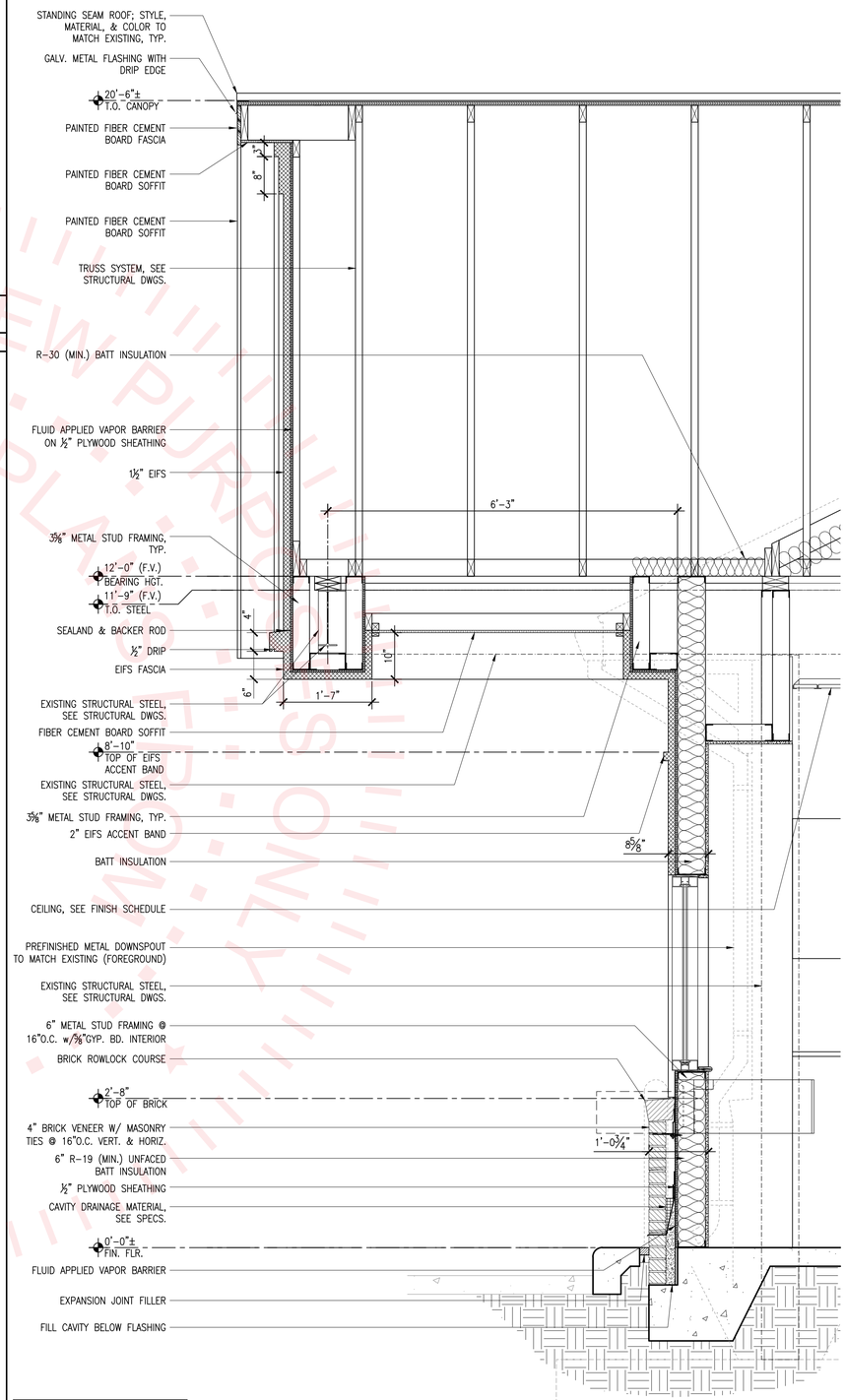

NOTE: PROVIDE DRAINAGE DEVICES PER MANUFACTURER RECOMMENDATION. BACKWRAP 2" MIN. @ ALL EDGES

A3 WALL SECTION

SCALE: 3/4" = 1'-0" | DRIVE-THRU

© 2021 DAG ARCHITECTS, INC. ALL RIGHTS RESERVED NO PART OF THIS DOCUMENT MAY BE COPIED, REPRODUCED OR TRANSMITTED BY ANY MEANS WITHOUT WRITTEN PERMISSION OF DAG ARCHITECTS, INC. THESE DRAWINGS AND SPECIFICATIONS ARE THE PROPERTY AND COPYRIGHT OF DAG ARCHITECTS, INC. AND SHALL NOT BE USED ON ANY OTHER PROJECT OR LOCATION EXCEPT AS DESCRIBED ON THE DRAWINGS. WITHOUT THE PRIOR WRITTEN AGREEMENT OF DAG ARCHITECTS.

G:\PC Harrison\Projects\2023 Projects\23071 PanCare Clinic Chipley\B-Design\BSAutoCAD\A302 Wall Sections.dwg, A302, 2/7/2024 4:16:12 PM, dbragdon

PRELIMINARY REVIEW PURPOSES ONLY
ORDER PLANS FOR CONSTRUCTION
STEVEN M. HEINCOM
AR-0009694

DAG ARCHITECTS
DAG Architects AR0009694
455 Harrison Ave Suite I Panama City, FL 32401
850.387.1671
www.DAGarchitects.com

BID DOCUMENTS

PANCARE OF FLORIDA, INC.
RENOVATIONS & NEW CONSTRUCTION FOR PANCARE CHIPLEY
1440 MAIN ST, CHIPLEY, FL 32428

PANCARE OF FLORIDA, INC.

REVISIONS:

No.	Description	Date

WALL SECTIONS

PROJECT NUMBER	23071
DATED	02/05/2023

A-302

23071
PRELIMINARY REVIEW SET
02/05/2024

© 2021 DAG ARCHITECTS, INC. ALL RIGHTS RESERVED NO PART OF THIS DOCUMENT MAY BE COPIED, REPRODUCED OR TRANSMITTED BY ANY MEANS WITHOUT WRITTEN PERMISSION OF DAG ARCHITECTS, INC. THESE DRAWINGS AND SPECIFICATIONS ARE THE PROPERTY AND COPYRIGHT OF DAG ARCHITECTS, INC. AND SHALL NOT BE USED ON ANY OTHER PROJECT OR LOCATION EXCEPT AS DESCRIBED ON THE DRAWINGS, WITHOUT THE PRIOR WRITTEN AGREEMENT OF DAG ARCHITECTS.

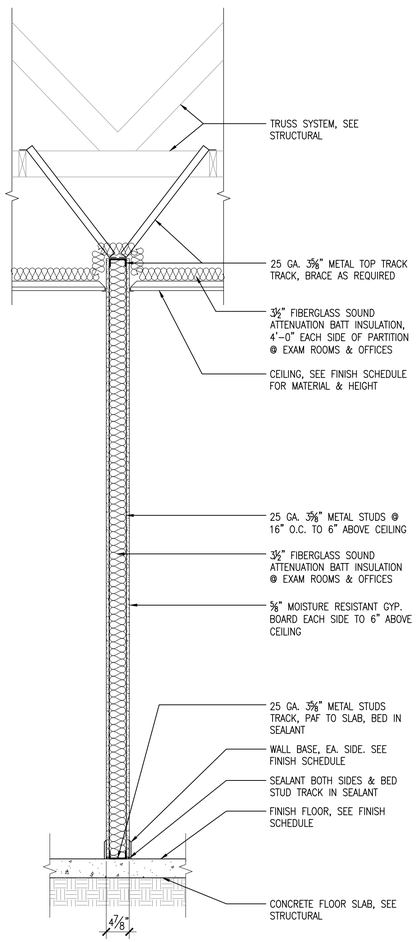

PARTITION NOTES:

1. FIRE BARRIER AT WALL TYPE W-1: CONSTRUCT WALL IN ACCORDANCE WITH UL U905 AND U419. STENCIL ABOVE CEILING AS NOTED ON A-101. SEE A-101 FLOOR PLAN FOR LOCATIONS.

A1	PARTITION TYPE W-1
SCALE: 3/4" = 1'-0"	OFFICES, EXAM ROOMS, EQUIPMENT ROOMS

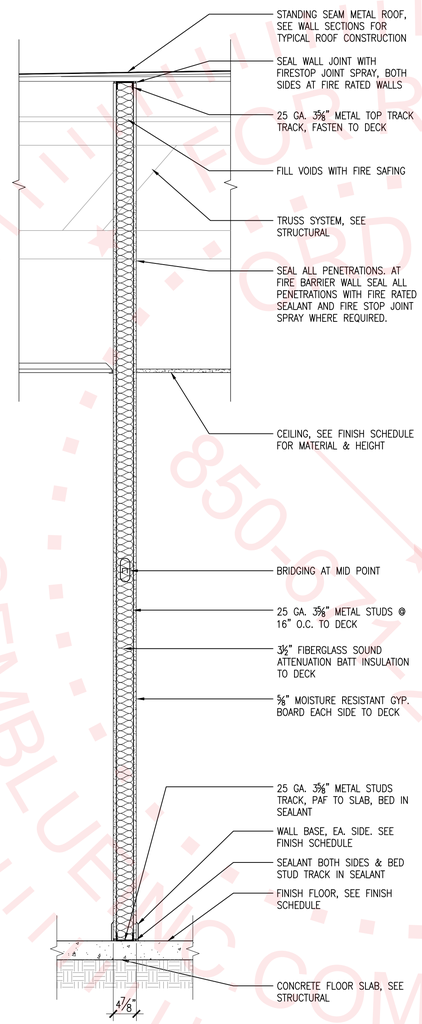

PARTITION NOTES:

1. FIRE BARRIER AT WALL TYPE W-2: CONSTRUCT WALL IN ACCORDANCE WITH UL U905 AND U419. STENCIL ABOVE CEILING AS NOTED ON A-101. SEE A-101 FLOOR PLAN FOR LOCATIONS.

2. PARTITION TYPE W-2A SAME AS TYPE W-2, BUT UTILIZES 6" CFS STUDS INSTEAD OF 3⅝"

A2	PARTITION TYPE W-2
SCALE: 3/4" = 1'-0"	TOILETS, EQUIPMENT ROOMS

WALL / PARTITION NOTES

1. SEAL WALL JOINTS AND AT THE ROOF DECK TO ENSURE ACOUSTICAL INTEGRITY (ALL WALLS) AND FIRE RATING (WHERE REQUIRED).
2. BRACE ALL WALLS THAT TERMINATE AT 6" ABOVE CEILINGS.
3. STENCIL ABOVE CEILING ON BOTH SIDES OF ALL FIRE RATED WALLS 3" HIGH LETTERING TO READ "FIRE BARRIER– PROTECT ALL OPENINGS".
4. ALL ROOMS WITHOUT CEILING HAVE FINISHED, PAINTED GYPSUM BOARD FROM TOP OF SLAB TO BOTTOM OF DECK.
5. PROVIDE TILE BACKERBOARD BEHIND TILE.
6. PROVIDE MOISTURE RESISTANT BACKERBOARD ABOVE TILE, IN JANITOR'S CLOSET AND DAMP LOCATIONS.

FOR REVIEW PURPOSES ONLY
NOT FOR ORDER PLANS
850-674-2714
SEMBLUE@GMAIL.COM

DAG ARCHITECTS
DAG Architects AR0009694
455 Harrison Ave Suite I Panama City, FL 32401
850.387.1671
www.DAGarchitects.com

BID DOCUMENTS

PANCARE OF FLORIDA, INC.
RENOVATIONS & NEW CONSTRUCTION FOR PANCARE CHIPLEY
1440 MAIN ST, CHIPLEY, FL 32428

PANCARE OF FLORIDA, INC.

REVISIONS:

No.	Description	Date

PARTITION TYPES

PROJECT NUMBER	23071
DATED	02/05/2023

A-303

G:\PC Harrison\Projects\23\23 Projects\23071 PanCare Clinic Chipley\9-Design\BSAutoCAD\A-303 Partition Types.DWG, A-303, 2/7/2024 4:16:47 PM, dbrogdon

23071
PRELIMINARY REVIEW SET
02/05/2024

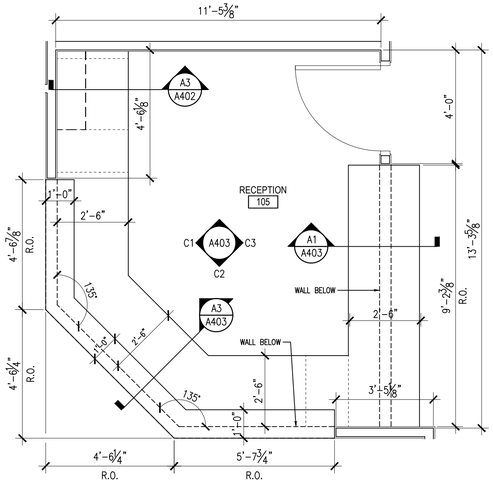

C1 ENLARGED PLAN

SCALE: 3/8" = 1'-0"

RECEPTION #105

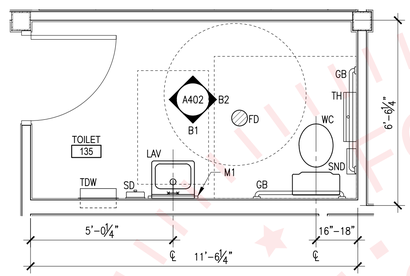

C2 ENLARGED PLAN

SCALE: 3/8" = 1'-0"

TOILET #135

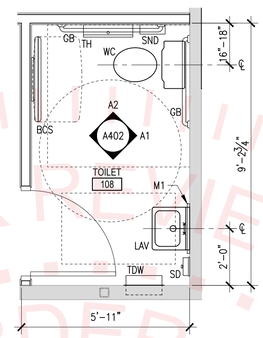

C3 ENLARGED PLAN

SCALE: 3/8" = 1'-0"

TOILET #108

C4 PLUMBING FIXTURE SCHEDULE

SCALE: NTS

.

PLUMBING FIXTURE SCHEDULE

MARK	DESCRIPTION	MANUFACTURER	MODEL	REMARKS
BCS	BABY CHANGING STATION	KOOLA KARE	KB-300	SURFACE MOUNTED, MOUNT PER MANUF. INSTRUCTIONS.
		-	-	
GB	GRAB BAR	BOBRICK	B-5806.99x36	36" LENGTH BEHIND WC & 42" TO THE SIDE OF WC, MOUNT CENTERLINE @ 2'-10" AFF
		BOBRICK	B-5806.99x42	
M1	FRAMED MIRROR	BOBRICK	B-2908 18Wx36H	MOUNT BOTTOM @ 3'-3" AFF
		-	-	
SD	WALL MOUNTED SOAP DISPENSER	BOBRICK	B-2112	SURFACE MOUNTED, MOUNT BOTTOM @ 3'-3" AFF
		-	-	
SND	SANITARY NAPKIN DISPOSAL	BOBRICK	B-254	SURFACE MOUNTED, MOUNT TOP @ 2'-6" AFF
		-	-	
TH	TOILET TISSUE HOLDER TWIN JUMBO-ROLL DISPENSER	BOBRICK	B-2892	SURFACE MOUNTED, MOUNT TOP @ 2'-6" AFF
		-	-	
TD	TOWEL DISPENSER	BOBRICK	B-262	SURFACE MOUNTED, MOUNT TOP @ 3'-4" AFF
		-	-	
TDW	TOWEL DISPENSER AND WASTE RECEPTACLE	BOBRICK	B-3944	RECESSED MOUNTED, MOUNT TOP @ 5'-4" AFF
		-	-	
FD	FLOOR DRAIN	REFER TO PLUMBING DRAWINGS		
LAV	WALL MOUNTED LAVATORY	REFER TO PLUMBING DRAWINGS		
WC	WATER CLOSET	REFER TO PLUMBING DRAWINGS		

NOTES:
1. PROVIDE INSULATED COVERINGS ON ALL PIPES BENEATH ALL LAVATORIES SIMILAR TO LAVATORY GUARD. LPG - LAVATORY PIPE GUARD
2. ALL ITEMS FURNISHED AND INSTALLED BY CONTRACTOR
3. INSTALL WOOD BLOCK IN THE WALL FOR MOUNTING ALL ACCESSORIES.
4. INSTALL MARBLE THRESHOLD AT ALL TILE TO OTHER FLOORING TRANSITIONS.

EXCEL FILE LOCATION: 2/7/2024 16:16
#N/A

A1 .

SCALE: N/A

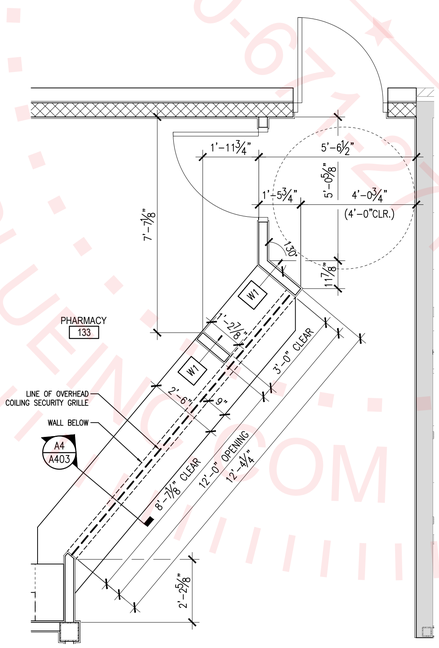

A2 ENLARGED PLAN

SCALE: 3/8" = 1'-0"

PHARMACY #133

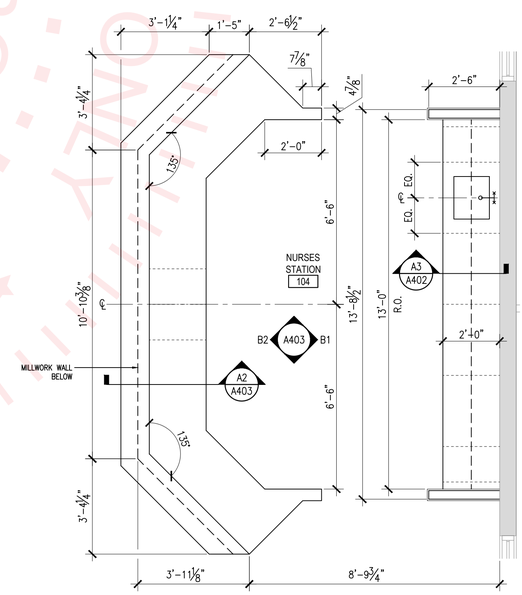

A4 ENLARGED PLAN

SCALE: 3/8" = 1'-0"

NURSE'S STATION #104

© 2021 DAG ARCHITECTS, INC. ALL RIGHTS RESERVED NO PART OF THIS DOCUMENT MAY BE COPIED, REPRODUCED OR TRANSMITTED BY ANY MEANS WITHOUT WRITTEN PERMISSION OF DAG ARCHITECTS, INC. THESE DRAWINGS AND SPECIFICATIONS ARE THE PROPERTY AND COPYRIGHT OF DAG ARCHITECTS, INC. AND SHALL NOT BE USED ON ANY OTHER PROJECT OR LOCATION EXCEPT AS DESCRIBED ON THE DRAWINGS, WITHOUT THE PRIOR WRITTEN AGREEMENT OF DAG ARCHITECTS.

G:\PC Harrison\Projects\2023 Projects\23071 PanCare Clinic Chipley\9-Design\BSAutoCAD\A401 Enlarged Plans.dwg, A401, 2/7/2024 4:17:30 PM, dbrogdon

FOR REVIEW PURPOSES ONLY
PROPERTY OF SEMBLUEINC.COM
850-674-2414

DAG ARCHITECTS
DAG Architects AR0009694
455 Harrison Ave Suite I Panama City, FL 32401
850.387.1671
www.DAGarchitects.com

BID DOCUMENTS

PANCARE OF FLORIDA, INC.
RENOVATIONS & NEW CONSTRUCTION FOR PANCARE CHIPLEY
1440 MAIN ST, CHIPLEY, FL 32428

PANCARE OF FLORIDA, INC.

REVISIONS:

No.	Description	Date

ENLARGED PLANS

PROJECT NUMBER	23071
DATED	02/05/2023

A-401

23071
PRELIMINARY REVIEW SET
02/05/2024

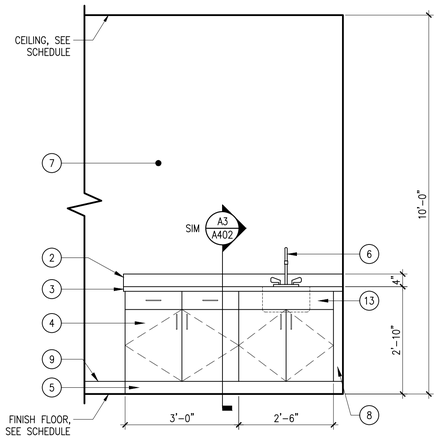

C1	INTERIOR ELEVATION
SCALE: 1/2" = 1'-0"	TYPICAL EXAM ROOM CASEWORK

C2	.
SCALE: N/A	

C3	.
SCALE: N/A	

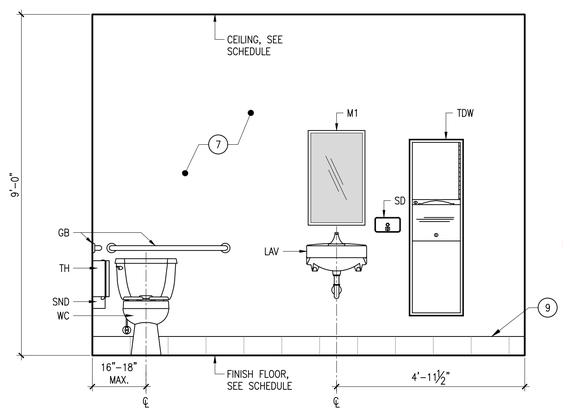

B1	INTERIOR ELEVATION
SCALE: 1/2" = 1'-0"	TOILET #135

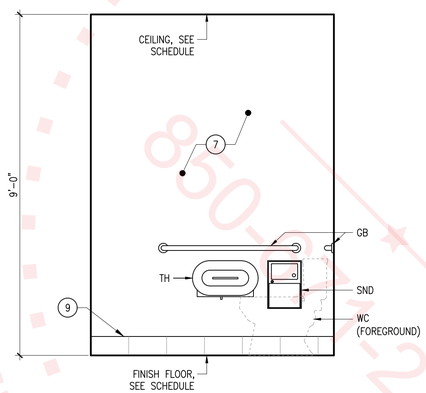

B2	INTERIOR ELEVATION
SCALE: 1/2" = 1'-0"	TOILET #135

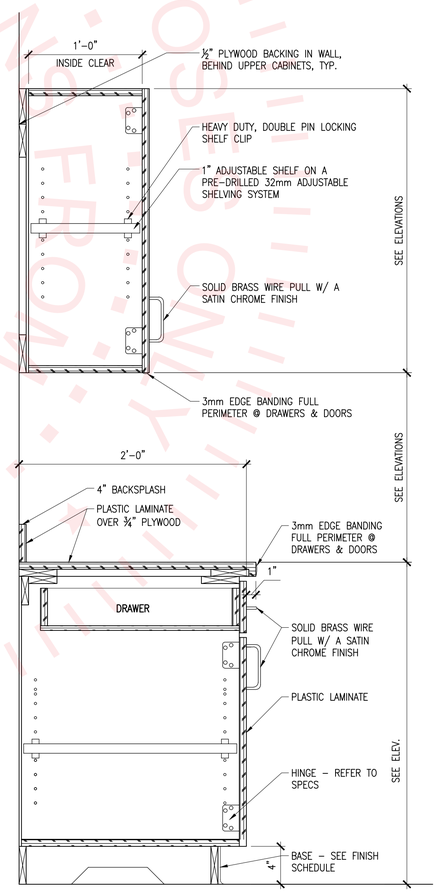

A3	TYPICAL CASEWORK SECTION
SCALE: 1-1/2" = 1'-0"	

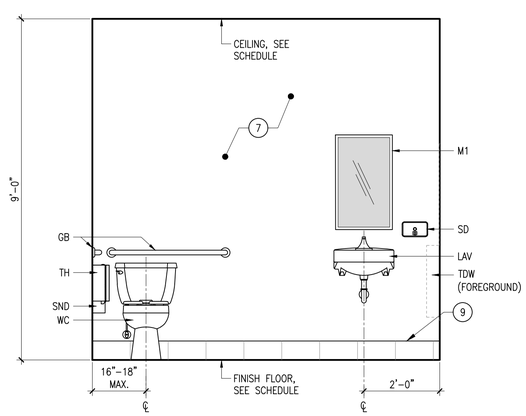

A1	INTERIOR ELEVATION
SCALE: 1/2" = 1'-0"	TOILET #108

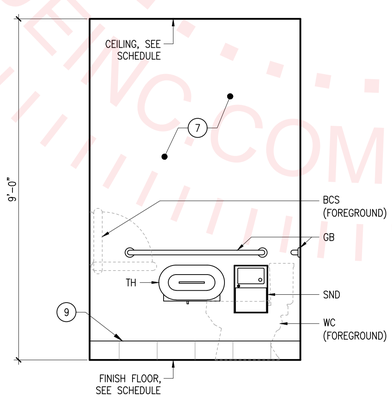

A2	INTERIOR ELEVATION
SCALE: 1/2" = 1'-0"	TOILET #108

KEYNOTES:

1. WALL CABINET, 12" DEEP CLEAR; PLASTIC LAMINATE; REFER TO FINISH PLAN FOR TYPE
2. 4" HIGH BACKSPLASH; PLASTIC LAMINATE TO MATCH COUNTERTOP
3. COUNTERTOP; PLASTIC LAMINATE; REFER TO FINISH PLAN FOR TYPE
4. BASE/UPPER CABINET; PLASTIC LAMINATE; REFER TO FINISH PLAN FOR TYPE
5. 4" TOE KICK
6. PLUMBING FIXTURE– REFER TO PLUMBING DRAWINGS FOR ADD'L INFORMATION
7. PAINTED GYP. BD.; VERIFY PAINT COLOR COORDINATE W/ OWNER'S REP.
8. FILLER PANEL; 3" MINIMUM @ WALL PERPENDICULAR SIDE
9. WALL BASE, SEE SCHEDULE
10. OF/CI APPLIANCE; REFER TO MANUFACTURER INFORMATION
11. OF/OI OFFICE EQUIPMENT; SHOWN FOR REFERENCE ONLY. PROVIDE GROMMETS @ COUNTERTOP FOR ELECTRICAL DEVICES, COORDINATE LOCATION W/OWNER'S I.T. REP.
12. TRANSACTION DRAWER; BASIS OF DESIGN: QUIKSERV, MODEL QSP-713S; INSTALL PER MANUFACTURER'S INSTRUCTIONS.
13. FIXED PANEL.

NOTES:

1. CONTRACTOR TO VERIFY FINAL CASEWORK/ MILLWORK FINISHES W/ OWNER'S REP.
2. CONTRACTOR TO VERIFY FINAL CASEWORK/ MILLWORK CONFIGURATION W/ OWNER'S REP.
3. CONTRACTOR TO VERIFY FINAL CASEWORK/ MILLWORK HARDWARE W/ OWNER'S REP.
4. ALL CASEWORK OR MILLWORK INTERIORS TO BE WHITE MELAMINE; VERIFY W/ OWNER'S REP.
5. REFER TO SHEET A-001 FOR MOUNTING HEIGHTS & ADDITIONAL INFORMATION.

A5	NOTES
SCALE: NTS	

FOR REVIEW PURPOSES ONLY
ORDER PLANS FROM
850-332-2714
SEMBLUE.COM

DAG ARCHITECTS
DAG Architects AR0009694
455 Harrison Ave Suite I Panama City, FL 32401
850.387.1671
www.DAGarchitects.com

BID DOCUMENTS

PANCARE OF FLORIDA, INC.
RENOVATIONS & NEW CONSTRUCTION FOR PANCARE CHIPLEY
1440 MAIN ST, CHIPLEY, FL 32428

PANCARE OF FLORIDA, INC.

REVISIONS:

No.	Description	Date

INTERIOR ELEVATIONS

PROJECT NUMBER	23071
DATED	02/05/2023

A-402

© 2021 DAG ARCHITECTS, INC. ALL RIGHTS RESERVED NO PART OF THIS DOCUMENT MAY BE COPIED, REPRODUCED OR TRANSMITTED BY ANY MEANS WITHOUT WRITTEN PERMISSION OF DAG ARCHITECTS, INC. THESE DRAWINGS AND SPECIFICATIONS ARE THE PROPERTY AND COPYRIGHT OF DAG ARCHITECTS, INC. AND SHALL NOT BE USED ON ANY OTHER PROJECT OR LOCATION EXCEPT AS DESCRIBED ON THE DRAWINGS, WITHOUT THE PRIOR WRITTEN AGREEMENT OF DAG ARCHITECTS.

G:\PC Harrison\Projects\2023 Projects\23071 PanCare Clinic Chipley\9-Design\BSAutoCAD\A-A402 Interior Elevations.dwg, A402, 2/7/2024 4:19:15 PM, dbragdon

23071
PRELIMINARY REVIEW SET
02/05/2024

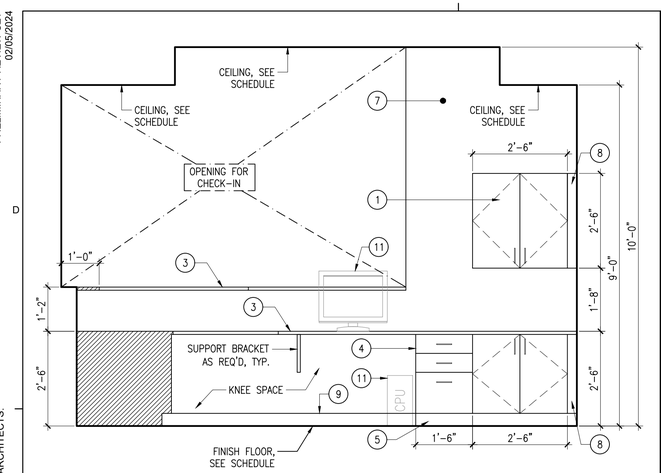

C1	INTERIOR ELEVATION
SCALE: 1/2" = 1'-0"	RECEPTION #105

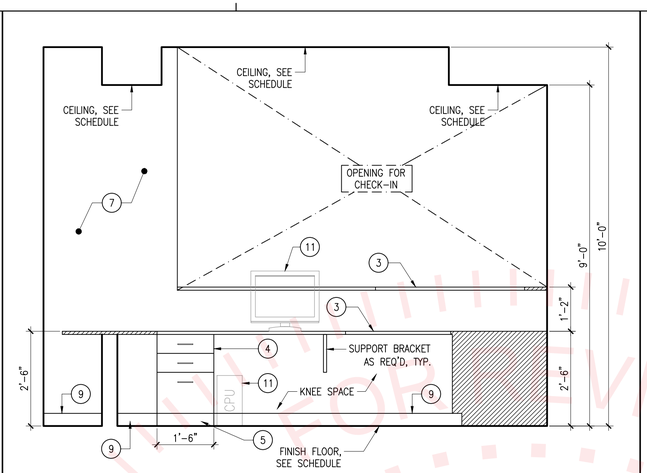

C2	INTERIOR ELEVATION
SCALE: 1/2" = 1'-0"	RECEPTION #105

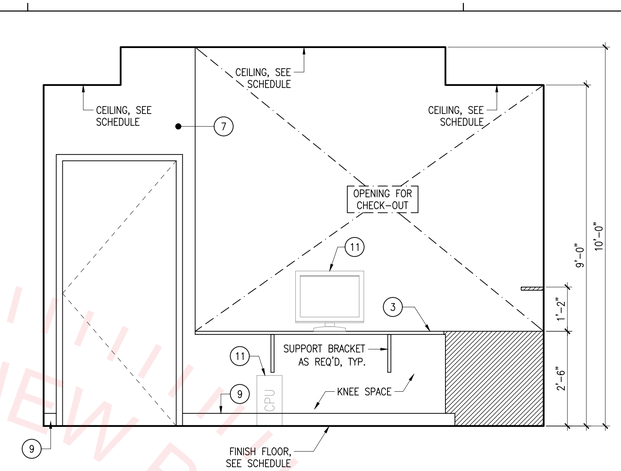

C3	INTERIOR ELEVATION
SCALE: 1/2" = 1'-0"	RECEPTION #105

KEYNOTES:

1. WALL CABINET, 12" DEEP CLEAR; PLASTIC LAMINATE; REFER TO FINISH PLAN FOR TYPE
2. 4" HIGH BACKSPLASH; PLASTIC LAMINATE TO MATCH COUNTERTOP
3. COUNTERTOP; PLASTIC LAMINATE; REFER TO FINISH PLAN FOR TYPE
4. BASE/UPPER CABINET; PLASTIC LAMINATE; REFER TO FINISH PLAN FOR TYPE
5. 4" TOE KICK
6. PLUMBING FIXTURE– REFER TO PLUMBING DRAWINGS FOR ADD'L INFORMATION
7. PAINTED GYP. BD.; VERIFY PAINT COLOR COORDINATE W/ OWNER'S REP.
8. FILLER PANEL; 3" MINIMUM @ WALL PERPENDICULAR SIDE
9. WALL BASE, SEE SCHEDULE
10. OF/CI APPLIANCE; REFER TO MANUFACTURER INFORMATION
11. OF/OI OFFICE EQUIPMENT; SHOWN FOR REFERENCE ONLY. PROVIDE GROMMETS @ COUNTERTOP FOR ELECTRICAL DEVICES, COORDINATE LOCATION W/OWNER'S I.T. REP.
12. TRANSACTION DRAWER; BASIS OF DESIGN: QUIKSERV, MODEL QSP–713S; INSTALL PER MANUFACTURER'S INSTRUCTIONS.
13. FIXED PANEL.

NOTES:

1. CONTRACTOR TO VERIFY FINAL CASEWORK/ MILLWORK FINISHES W/ OWNER'S REP.
2. CONTRACTOR TO VERIFY FINAL CASEWORK/ MILLWORK CONFIGURATION W/ OWNER'S REP.
3. CONTRACTOR TO VERIFY FINAL CASEWORK/ MILLWORK HARDWARE W/ OWNER'S REP.
4. ALL CASEWORK OR MILLWORK INTERIORS TO BE WHITE MELAMINE; VERIFY W/ OWNER'S REP.
5. REFER TO SHEET A–001 FOR MOUNTING HEIGHTS & ADDITIONAL INFORMATION.

C5	NOTES
SCALE: NTS	

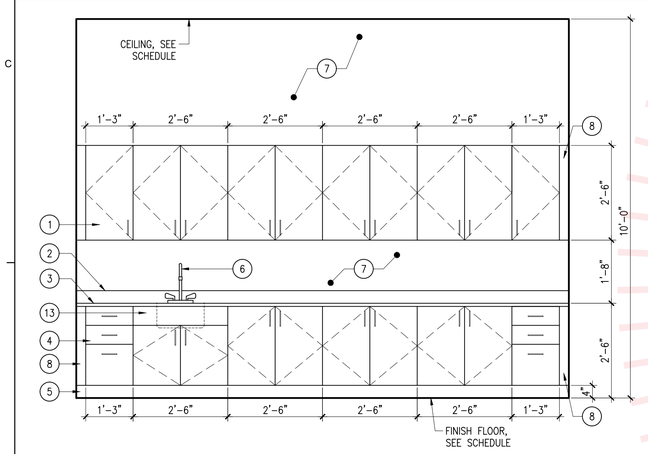

B1	INTERIOR ELEVATION
SCALE: 1/2" = 1'-0"	NURSES STATION #104

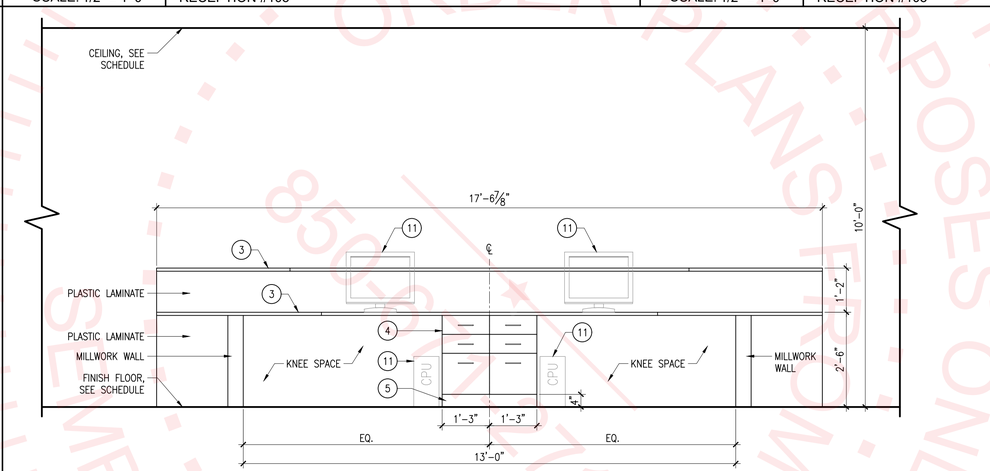

B2	INTERIOR ELEVATION
SCALE: 1/2" = 1'-0"	NURSES STATION #104

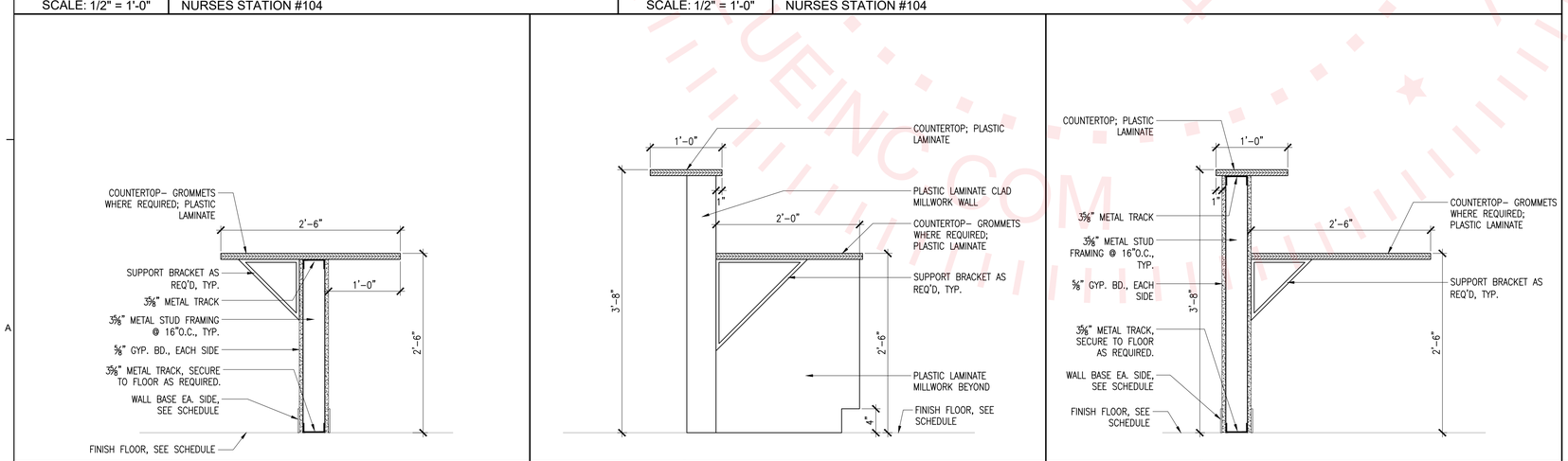

A1	MILLWORK SECTION
SCALE: 1" = 1'-0"	RECEPTION #105

A2	MILLWORK SECTION
SCALE: 1" = 1'-0"	NURSES STATION #104

A3	MILLWORK SECTION
SCALE: 1" = 1'-0"	RECEPTION #105

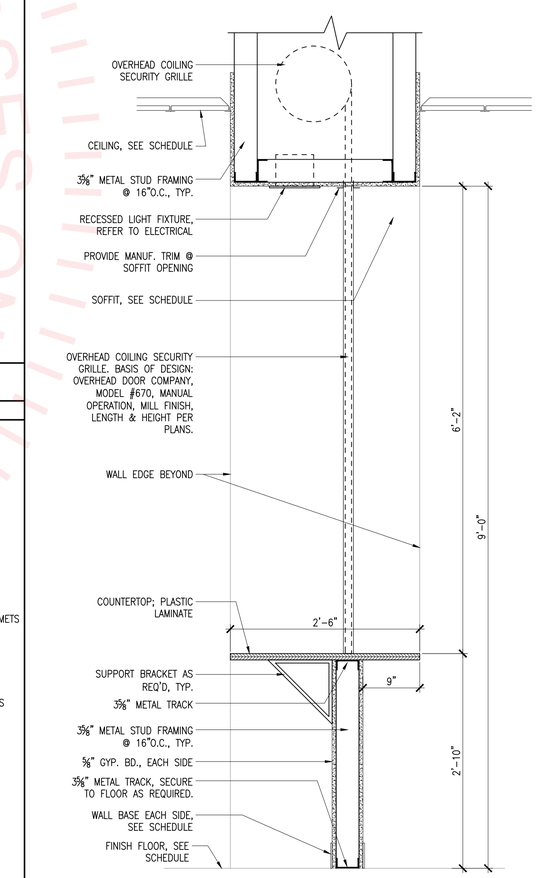

A4	MILLWORK SECTION
SCALE: 1" = 1'-0"	PHARMACY #133

© 2021 DAG ARCHITECTS, INC. ALL RIGHTS RESERVED NO PART OF THIS DOCUMENT MAY BE COPIED, REPRODUCED OR TRANSMITTED BY ANY MEANS WITHOUT WRITTEN PERMISSION OF DAG ARCHITECTS, INC. THESE DRAWINGS AND SPECIFICATIONS ARE THE PROPERTY AND COPYRIGHT OF DAG ARCHITECTS, INC. AND SHALL NOT BE USED ON ANY OTHER PROJECT OR LOCATION EXCEPT AS DESCRIBED ON THE DRAWINGS, WITHOUT THE PRIOR WRITTEN AGREEMENT OF DAG ARCHITECTS.

G:\PC Harrison\Projects\2023 Projects\23071 PanCare Clinic Chipley\9-Design\BSAutoCAD\A-A402 Interior Elevations.dwg, A403, 2/7/2024 4:19:36 PM, dbragdon

PRELIMINARY REVIEW SET
NOT FOR ORDER PLANS
FOR REVIEW PURPOSES ONLY
DAG ARCHITECTS, INC.
850.387.1671

DAG ARCHITECTS
DAG Architects AR0009694
455 Harrison Ave Suite I Panama City, FL 32401
850.387.1671
www.DAGarchitects.com

BID DOCUMENTS

PANCARE OF FLORIDA, INC.
RENOVATIONS & NEW CONSTRUCTION FOR PANCARE CHIPLEY
1440 MAIN ST, CHIPLEY, FL 32428

PANCARE OF FLORIDA, INC.

REVISIONS:

No.	Description	Date

INTERIOR ELEVATIONS

PROJECT NUMBER	23071
DATED	02/05/2023

A-403

23071
PRELIMINARY REVIEW SET
02/05/2024

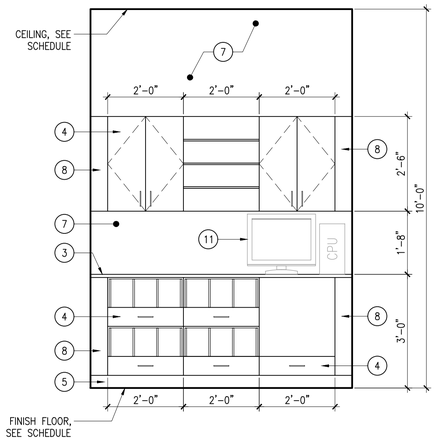

C1	INTERIOR ELEVATION
SCALE: 1/2" = 1'-0"	PHARMACY DRIVE-THRU #133A

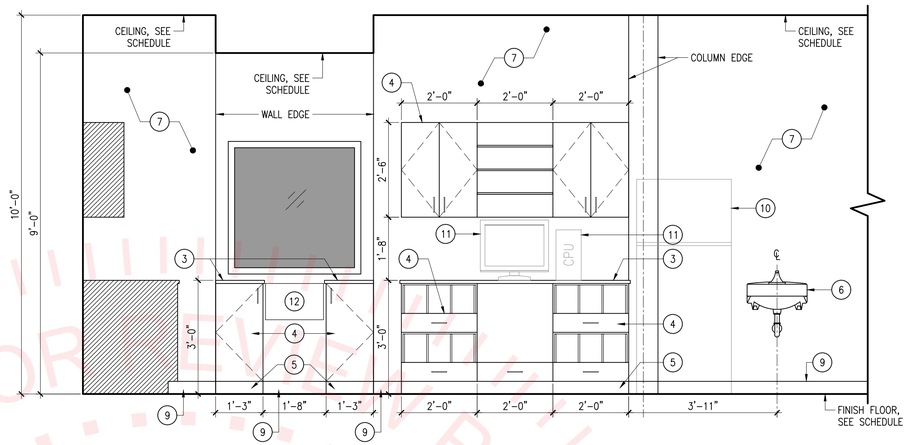

C3	INTERIOR ELEVATION
SCALE: 1/2" = 1'-0"	PHARMACY DRIVE-THRU #133A

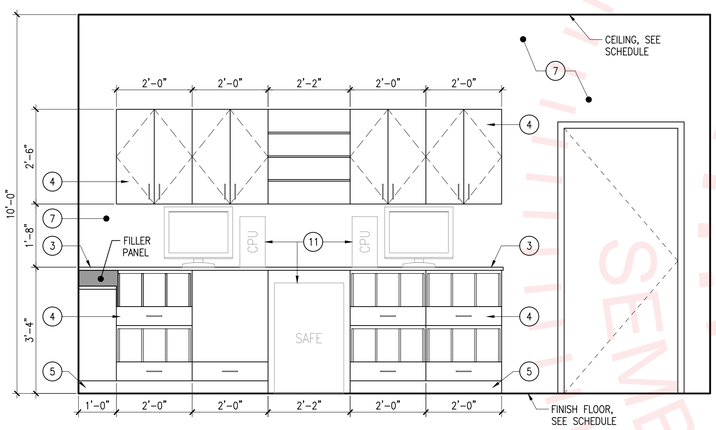

B1	INTERIOR ELEVATION
SCALE: 1/2" = 1'-0"	PHARMACY #133

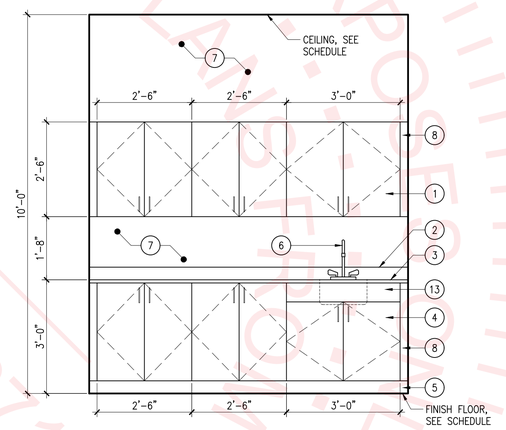

B3	INTERIOR ELEVATION
SCALE: 1/2" = 1'-0"	DENTAL LAB #120

KEYNOTES:

1. WALL CABINET, 12" DEEP CLEAR; PLASTIC LAMINATE; REFER TO FINISH PLAN FOR TYPE
2. 4" HIGH BACKSPLASH; PLASTIC LAMINATE TO MATCH COUNTERTOP
3. COUNTERTOP; PLASTIC LAMINATE; REFER TO FINISH PLAN FOR TYPE
4. BASE/UPPER CABINET; PLASTIC LAMINATE; REFER TO FINISH PLAN FOR TYPE
5. 4" TOE KICK
6. PLUMBING FIXTURE– REFER TO PLUMBING DRAWINGS FOR ADD'L INFORMATION
7. PAINTED GYP. BD.; VERIFY PAINT COLOR COORDINATE W/ OWNER'S REP.
8. FILLER PANEL; 3" MINIMUM @ WALL PERPENDICULAR SIDE
9. WALL BASE, SEE SCHEDULE
10. OF/CI APPLIANCE; REFER TO MANUFACTURER INFORMATION
11. OF/OI OFFICE EQUIPMENT; SHOWN FOR REFERENCE ONLY. PROVIDE GROMMETS @ COUNTERTOP FOR ELECTRICAL DEVICES, COORDINATE LOCATION W/OWNER'S I.T. REP.
12. TRANSACTION DRAWER; BASIS OF DESIGN: QUIKSERV, MODEL QSP–713S; INSTALL PER MANUFACTURER'S INSTRUCTIONS.
13. FIXED PANEL.

NOTES:

1. CONTRACTOR TO VERIFY FINAL CASEWORK/ MILLWORK FINISHES W/ OWNER'S REP.
2. CONTRACTOR TO VERIFY FINAL CASEWORK/ MILLWORK CONFIGURATION W/ OWNER'S REP.
3. CONTRACTOR TO VERIFY FINAL CASEWORK/ MILLWORK HARDWARE W/ OWNER'S REP.
4. ALL CASEWORK OR MILLWORK INTERIORS TO BE WHITE MELAMINE; VERIFY W/ OWNER'S REP.
5. REFER TO SHEET A–001 FOR MOUNTING HEIGHTS & ADDITIONAL INFORMATION.

A1	.
SCALE: NTS	.

A3	.
SCALE: NTS	.

A5	NOTES
SCALE: NTS	

DAG ARCHITECTS
DAG Architects AR0009694
455 Harrison Ave Suite I Panama City, FL 32401
850.387.1671
www.DAGarchitects.com

BID DOCUMENTS

PANCARE OF FLORIDA, INC.
RENOVATIONS & NEW CONSTRUCTION
FOR PANCARE CHIPLEY
1440 MAIN ST, CHIPLEY, FL 32428

PANCARE OF FLORIDA, INC.

REVISIONS:

No.	Description	Date

INTERIOR ELEVATIONS

PROJECT NUMBER	23071
DATED	02/05/2023

A-404

© 2021 DAG ARCHITECTS, INC. ALL RIGHTS RESERVED. NO PART OF THIS DOCUMENT MAY BE COPIED, REPRODUCED OR TRANSMITTED BY ANY MEANS WITHOUT WRITTEN PERMISSION OF DAG ARCHITECTS, INC. THESE DRAWINGS AND SPECIFICATIONS ARE THE PROPERTY AND COPYRIGHT OF DAG ARCHITECTS, INC. AND SHALL NOT BE USED ON ANY OTHER PROJECT OR LOCATION EXCEPT AS DESCRIBED ON THE DRAWINGS, WITHOUT THE PRIOR WRITTEN AGREEMENT OF DAG ARCHITECTS.

G:\PC Harrison\Projects\2023 Projects\23071 PanCare Clinic Chipley\B-Design\B5-AutoCAD\A-A02 Interior Elevations.dwg, A404, 2/7/2024 4:20:00 PM, dbragdon

23071
PRELIMINARY REVIEW SET
02/05/2024

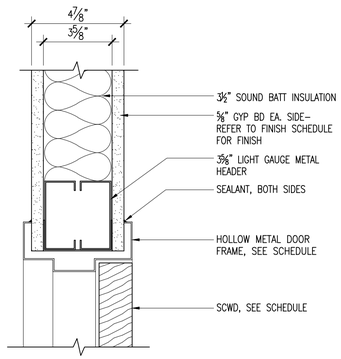

C1	HEADER @ TYP. SCWD
SCALE: 3"=1'-0"	(TO MATCH EXISTING)

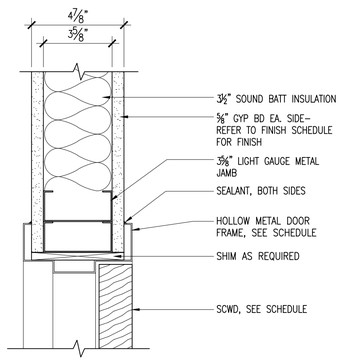

B1	JAMB @ TYP. SCWD
SCALE: 3"=1'-0"	(TO MATCH EXISTING)

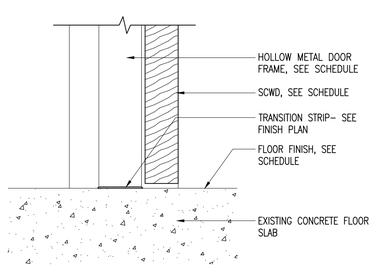

A1	THRESHOLD @ TYP. SCWD
SCALE: 3"=1'-0"	(TO MATCH EXISTING)

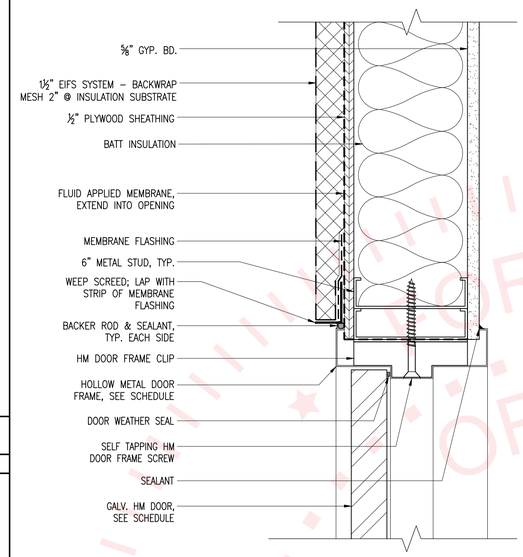

C2	HEAD @ HM DOOR
SCALE: 3" = 1'-0"	(TO MATCH EXISTING)

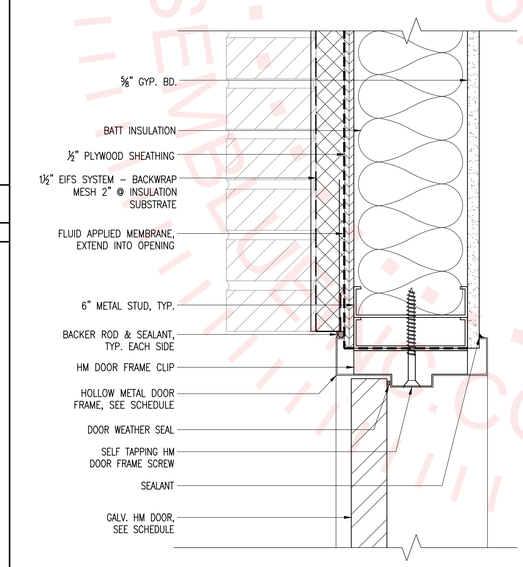

C3	TYP. WINDOW JAMB
SCALE: 3" = 1'-0"	(TO MATCH EXISTING)

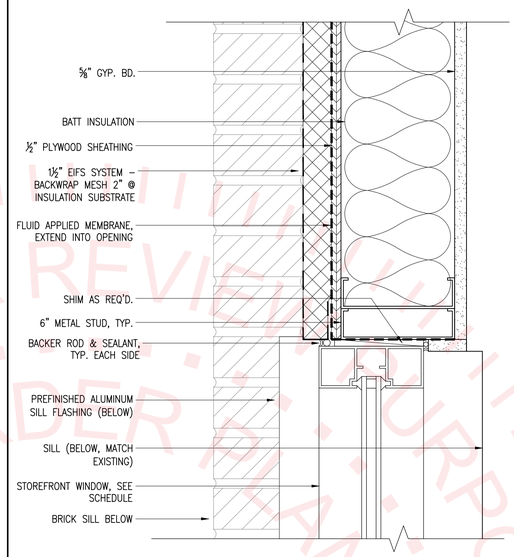

C4	TYP. WINDOW HEAD
SCALE: 3" = 1'-0"	(TO MATCH EXISTING)

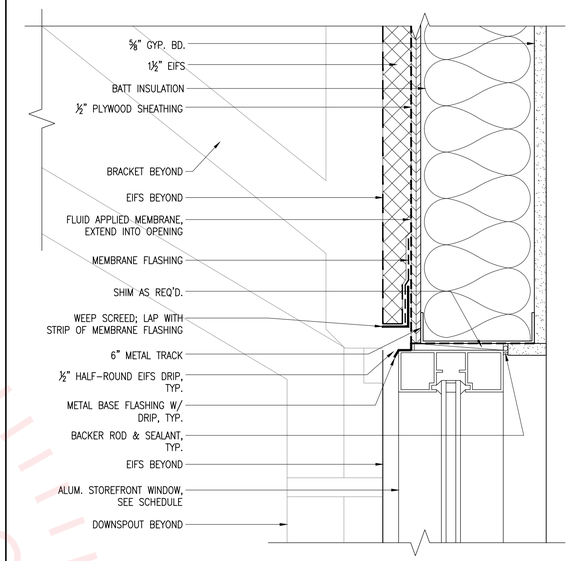

A2	JAMB @ HM DOOR
SCALE: 3" = 1'-0"	(TO MATCH EXISTING)

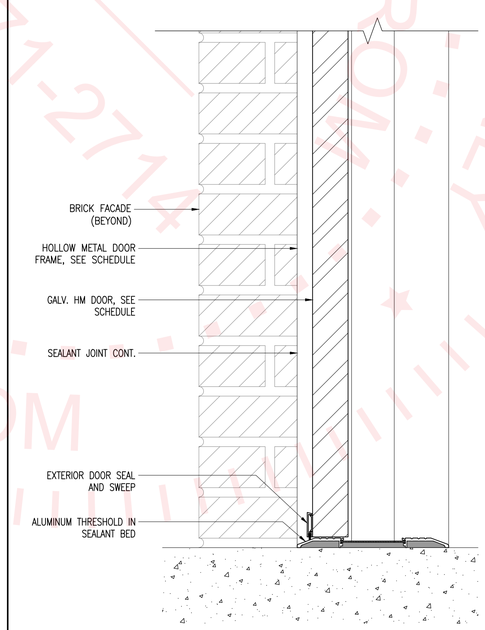

A3	SILL @ HM DOOR
SCALE: 3" = 1'-0"	(TO MATCH EXISTING)

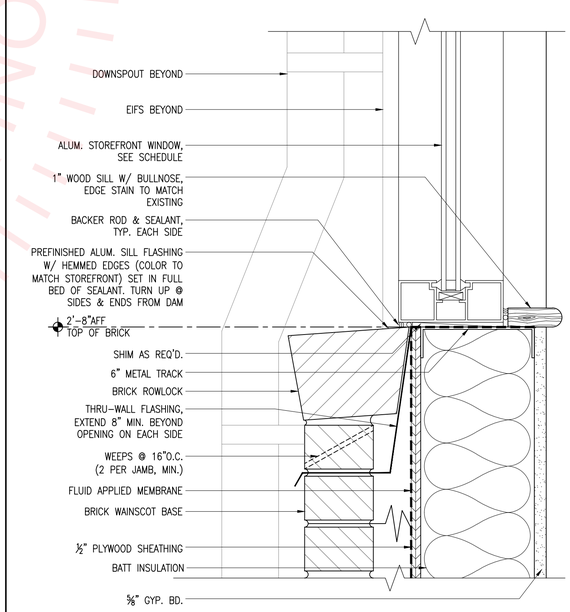

A4	TYP. WINDOW SILL
SCALE: 3" = 1'-0"	(TO MATCH EXISTING)

© 2021 DAG ARCHITECTS, INC. ALL RIGHTS RESERVED NO PART OF THIS DOCUMENT MAY BE COPIED, REPRODUCED OR TRANSMITTED BY ANY MEANS WITHOUT WRITTEN PERMISSION OF DAG ARCHITECTS, INC. THESE DRAWINGS AND SPECIFICATIONS ARE THE PROPERTY AND COPYRIGHT OF DAG ARCHITECTS, INC. AND SHALL NOT BE USED ON ANY OTHER PROJECT OR LOCATION EXCEPT AS DESCRIBED ON THE DRAWINGS, WITHOUT THE PRIOR WRITTEN AGREEMENT OF DAG ARCHITECTS.

G:\PC Harrison\Projects\23071 PanCare Clinic Chipley\9-Design\BAutoCAD\A501 HEAD SILL JAMB.DWG, A501, 2/7/2024 4:20:31 PM, dbrogdon

FOR REVIEW PURPOSES ONLY
NOT FOR CONSTRUCTION
ORDER PLANS FROM
850-671-2714
SEMBUILDING.COM

DAG ARCHITECTS
DAG Architects AR0009694
455 Harrison Ave Suite I Panama City, FL 32401
850.387.1671
www.DAGarchitects.com

BID DOCUMENTS

PANCARE OF FLORIDA, INC.
RENOVATIONS & NEW CONSTRUCTION FOR PANCARE CHIPLEY
1440 MAIN ST, CHIPLEY, FL 32428

PANCARE OF FLORIDA, INC.

REVISIONS:

No.	Description	Date

HEAD, SILL, & JAMB DETAILS

PROJECT NUMBER	23071
DATED	02/05/2023

A-501

23071
PRELIMINARY REVIEW SET
02/05/2024

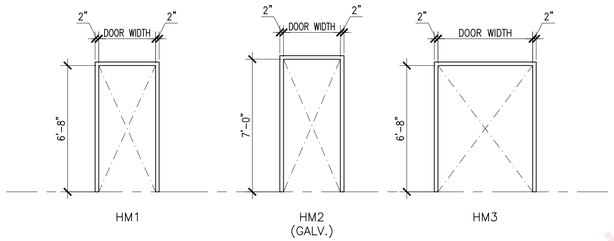

C1 DOOR FRAME TYPES

SCALE: 1/4" = 1'-0"

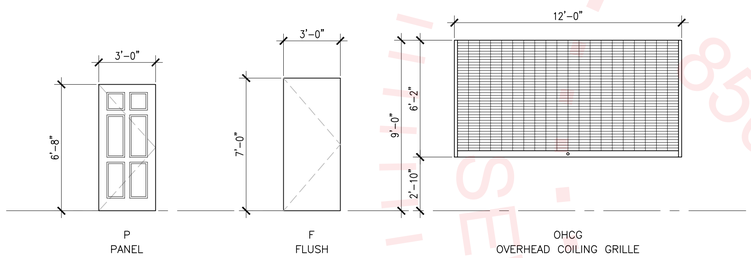

B1 DOOR TYPES

SCALE: 1/4" = 1'-0"

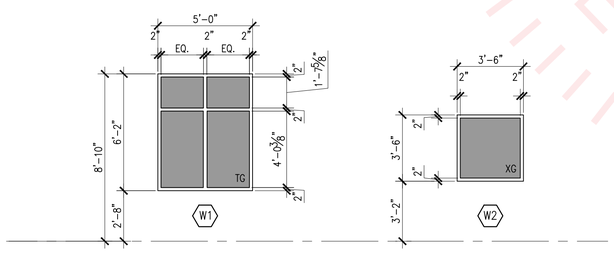

A1 WINDOW TYPES

SCALE: 1/4" = 1'-0"

DOOR AND FRAME SCHEDULE

DOOR NO.	DOOR DATA: DOOR ELEVATION	DOOR DATA: DOOR MATERIAL	DOOR DATA: DOOR SIZE (W x H)	FRAME: FRAME TYPE	FRAME: FRAME MATERIAL	DETAILS: HEAD	DETAILS: JAMB	DETAILS: SILL	DOOR REMARKS
101	P	SCWD	3'-0"x6'-8"	HM1	HM	C1/A501	B1/A501	A1/A501	
102	P	SCWD	3'-0"x6'-8"	HM1	HM	C1/A501	B1/A501	A1/A501	
103	P	SCWD	3'-0"x6'-8"	HM1	HM	C1/A501	B1/A501	A1/A501	
105	P	SCWD	3'-0"x6'-8"	HM1	HM	C1/A501	B1/A501	A1/A501	
106	P	SCWD	3'-0"x6'-8"	HM1	HM	C1/A501	B1/A501	A1/A501	
107	P	SCWD	3'-0"x6'-8"	HM1	HM	C1/A501	B1/A501	A1/A501	
108	P	SCWD	3'-0"x6'-8"	HM1	HM	C1/A501	B1/A501	A1/A501	
109	P	SCWD	3'-0"x6'-8"	HM1	HM	C1/A501	B1/A501	A1/A501	
111	P	SCWD	3'-0"x6'-8"	HM1	HM	C1/A501	B1/A501	A1/A501	
112	P	SCWD	PR 2'-6"x6'-8"	HM3	HM	C1/A501	B1/A501	A1/A501	
113	P	SCWD	3'-0"x6'-8"	HM1	HM	C1/A501	B1/A501	A1/A501	
114A	P	SCWD	3'-0"x6'-8"	HM1	HM	C1/A501	B1/A501	A1/A501	
118	P	SCWD	3'-0"x6'-8"	HM1	HM	C1/A501	B1/A501	A1/A501	
120	P	SCWD	3'-0"x6'-8"	HM1	HM	C1/A501	B1/A501	A1/A501	
128	P	SCWD	3'-0"x6'-8"	HM1	HM	C1/A501	B1/A501	A1/A501	
128A	P	SCWD	3'-0"x6'-8"	HM1	HM	C1/A501	B1/A501	A1/A501	
129	P	SCWD	3'-0"x6'-8"	HM1	HM	C1/A501	B1/A501	A1/A501	
132	F	HM	3'-0"x7'-0"	HM2	GHM	C2/A501	A2/A501	A3/A501	
133A	P	SCWD	3'-0"x6'-8"	HM1	HM	C1/A501	B1/A501	A1/A501	
133B	P	SCWD	3'-0"x6'-8"	HM1	HM	C1/A501	B1/A501	A1/A501	
133C	OHCG	ALUM.	6'-2"x12'-0"	-	-	-	-	-	USE MANUF'S TRIM & SOFFIT
134	P	SCWD	3'-0"x6'-8"	HM1	HM	C1/A501	B1/A501	A1/A501	
135	P	SCWD	3'-0"x6'-8"	HM1	HM	C1/A501	B1/A501	A1/A501	

EXCEL FILE LOCATION:
#N/A 2/7/2024 16:21

GENERAL NOTES (APPLIES TO ALL)

A. EXTERIOR DOORS, WINDOWS, FRAMES, GLASS, SIDE LITES & LIGHT KITS TO BE LARGE MISSILE IMPACT RATED.

B. EXTERIOR DOORS AND FRAMES TO MEET THE WIND LOAD REQUIREMENTS OF THE PROJECT.

C. GLASS FOR INTERIOR DOORS TO BE TEMPERED.

D. BASIS OF DESIGN FOR ALUMINUM STOREFRONT:
EXTERIOR: CORAL ARCHITECTURAL PRODUCTS FL550 w/MS381 IMPACT RATED ENTRANCE DOORS

THRESHOLD NOTES:

1. ½" MAXIMUM TOTAL HEIGHT WITH ¼" MAXIMUM VERTICAL CHANGE AT EDGE.
2. 1 : 2 SLOPED BEVEL REQUIRED IF LEVEL CHANGE IS OVER ¼" VERTICAL LEVEL CHANGE.
3. ¼" MAXIMUM VERTICAL LEVEL CHANGE.

DOOR REMARKS:

1. OVERHEAD COILING GRILLE TO USE MANUFACTURER'S TRIM & SOFFIT.

DOOR SCHEDULE GENERAL NOTES

1. DOOR MATERIAL ABBREVIATIONS
   HM = HOLLOW METAL
   GHM = GALVANIZED HOLLOW METAL
   SCWD = SOLID CORE WOOD DOOR
   SF = ALUMINUM STOREFRONT
   AL = ALUMINUM
   WD = SOLID WOOD CORE
   PR = PAIR
2. UNLESS NOTED OTHERWISE WHERE GLASS OCCURS IN DOORS PROVIDE TEMPERED GLASS (TG) AT NON-RATED DOORS AND FIRE GLASS AT RATED DOORS.
3. GLASS TYPE ABBREVIATIONS
   TG = TEMPERED GLASS
   SG = SINGLE GLASS
   IG = INSULATING GLASS (2 LAYERS GLASS W/ ½" AIR SPACE)
   XG = IMPACT RESISTANT GLASS
   TMG = TRANSPARENT MIRROR GLASS
   PCG = POLYCARBONATE SHEET
4. UNLESS NOTED OTHERWISE ALL DOORS ARE 1¾" THICK.
5. DOOR FINISH ABBREVIATIONS
   STN = STAINED
   PTD = PAINTED
   ANOD = ANODIZED
6. COORDINATE WITH OWNER'S REPRESENTATIVE FOR HARDWARE LOCKSET TYPES.
7. ALL STOREFRONT DOOR GLASS TO BE LAMINATED GLASS (LG).
8. ALL STOREFRONT TRANSOM GLASS TO BE INSULATED, SEE SPECIFICATIONS.
9. EXTERIOR AND WET AREA HOLLOW METAL FRAMES AND DOORS TO BE GALVANIZED.
10. ALL DOORS OFF OF CORRIDORS TO HAVE A CLOSER.

A3 NOTES & SCHEDULE

SCALE: NTS

DAG ARCHITECTS
DAG Architects AR0009694
455 Harrison Ave Suite I Panama City, FL 32401
850.387.1671
www.DAGarchitects.com

BID DOCUMENTS

PANCARE OF FLORIDA, INC.
RENOVATIONS & NEW CONSTRUCTION FOR PANCARE CHIPLEY
1440 MAIN ST, CHIPLEY, FL 32428

PANCARE OF FLORIDA, INC.

REVISIONS:

No.	Description	Date

DOOR SCHEDULE, DOOR & WINDOW ELEVATIONS

PROJECT NUMBER 23071
DATED 02/05/2023

A-600

FOR REVIEW ONLY
ORDER PLANS & SPECS
850-671-2171
SEMBLUEINC.COM

© 2021 DAG ARCHITECTS, INC. ALL RIGHTS RESERVED NO PART OF THIS DOCUMENT MAY BE COPIED, REPRODUCED OR TRANSMITTED BY ANY MEANS WITHOUT WRITTEN PERMISSION OF DAG ARCHITECTS, INC. THESE DRAWINGS AND SPECIFICATIONS ARE THE PROPERTY AND COPYRIGHT OF DAG ARCHITECTS, INC. AND SHALL NOT BE USED ON ANY OTHER PROJECT OR LOCATION EXCEPT AS DESCRIBED ON THE DRAWINGS, WITHOUT THE PRIOR WRITTEN AGREEMENT OF DAG ARCHITECTS.

G:\PC Harrison\Projects\2023 Projects\23071 PanCare Clinic Chipley\B-Design\B5Auto\CAD\A600 Door Schedule.dwg, A600, 2/7/2024 4:21:24 PM, dbongdon

23071
PRELIMINARY REVIEW SET
02/05/2024

ROOM FINISH SCHEDULE

GENERAL ROOM INFORMATION		FLOORS		WALLS	CEILINGS		SIGNAGE	BLINDS	REMARKS
ROOM NO.	ROOM NAME	MATERIAL	BASE		MATERIAL	HEIGHT			
100	VESTIBULE	LVT	WD PAINTED	PAINT	GYP BD.	SEE REMARKS	N	N	EXISTING VAULTED CEILING 15'-6"AFF @ EDGE, 17'-10"AFF @ CENTER, (V.F.)
101	LOBBY	LVT	WD PAINTED	PAINT	ACT/GYP. BD	SEE REMARKS	N	N	EXISTING GYP. BD. CLG. 13'-0"AFF (V.F.) /// ACT CLG. 10'-0"AFF
102	EXAM 1	LVT	WD PAINTED	PAINT	ACT	EX. (V.F.)	Y	Y	
103	EXAM 2	LVT	WD PAINTED	PAINT	ACT	EX. (V.F.)	Y	Y	
104	NURSE'S STATION	LVT	WD PAINTED	PAINT	GYP. BD.	10'-0"	Y	Y	
105	RECEPTION	LVT	WD PAINTED	PAINT	ACT/GYP. BD	VARIES	Y	N	GYP. BD. SOFFIT 9'-0"AFF /// ACT CLG. 10'-0"AFF
106	EXAM 3	LVT	WD PAINTED	PAINT	ACT	EX. (V.F.)	Y	Y	
107	EXAM 5	LVT	WD PAINTED	PAINT	ACT	10'-0"	Y	N	
108	TOILET	TILE	TILE	EPOXY PAINT	GYP. BD.	9'-0"	Y	N	
109	EXAM 4	LVT	WD PAINTED	PAINT	ACT	10'-0"	Y	Y	
110	CORRIDOR	LVT	WD PAINTED	PAINT	ACT	10'-0"	N	N	
111	BEHAVIORAL OFFICE	LVT	WD PAINTED	PAINT	ACT	10'-0"	Y	N	
112	CLOSET	LVT	WD PAINTED	PAINT	GYP. BD.	9'-0"	Y	N	
113	CORRIDOR	LVT	WD PAINTED	PAINT	ACT	EX. (V.F.)	N	N	
114	STAFF BREAK ROOM	LVT	WD PAINTED	PAINT	ACT	EX. (V.F.)	Y	Y	
114A	I.T.	LVT	WD PAINTED	PAINT	ACT	10'-0"	Y	N	
115	ELECTRICAL	SEALED CONC.	RUBBER	PAINT	ACT	EX. (V.F.)	Y	N	
116	TOILET	TILE	TILE	EPOXY PAINT	ACT	EX. (V.F.)	Y	N	
117	OFFICE	LVT	WD PAINTED	PAINT	ACT	10'-0"	Y	N	
118	HVAC CLOSET	LVT	WD PAINTED	PAINT	GYP. BD.	9'-0"	Y	N	
119	PANO	LVT	WD PAINTED	PAINT	ACT	10'-0"	Y	N	
120	DENTAL LAB	LVT	WD PAINTED	PAINT	ACT	EX. (V.F.)	Y	N	
121	JANITOR	SEALED CONC.	RUBBER	PAINT	ACT	EX. (V.F.)	Y	N	
122	WOMEN	EX-T	EX-T	EPOXY PAINT / EX-TILE	GYP. BD.	EX. (V.F.)	Y	N	
123	MEN	EX-T	EX-T	EPOXY PAINT / EX-TILE	GYP. BD.	EX. (V.F.)	Y	N	
124	CORRIDOR	LVT	WD PAINTED	PAINT	GYP. BD.	EX. (V.F.)	N	N	
125	CORRIDOR	LVT	WD PAINTED	PAINT	ACT	10'-0"	N	N	
126	TREATMENT 4	LVT	WD PAINTED	PAINT	ACT	10'-0"	Y	Y	
127	TREATMENT 3	LVT	WD PAINTED	PAINT	ACT	10'-0"	Y	Y	
128	STERILIZATION	LVT	WD PAINTED	PAINT	ACT	10'-0"	Y	Y	
128A	DENTAL EQUIPMENT CLOSET	LVT	WD PAINTED	PAINT	ACT	10'-0"	Y	N	
129	OFFICE	LVT	WD PAINTED	PAINT	ACT	10'-0"	Y	N	
130	TREATMENT 1	LVT	WD PAINTED	PAINT	ACT	10'-0"	Y	N	
131	TREATMENT 2	LVT	WD PAINTED	PAINT	ACT	10'-0"	Y	N	
132	RX RETAIL	LVT	WD PAINTED	PAINT	ACT	10'-0"	N	N	
133	PHARMACY STORAGE	LVT	WD PAINTED	PAINT	ACT	10'-0"	Y	N	GYP. BD. SOFFIT 9'-0"AFF /// ACT CLG. 10'-0"AFF
133A	PHARMACY DRIVE-THRU	LVT	WD PAINTED	PAINT	ACT	10'-0"	N	N	
134	CORRIDOR	LVT	WD PAINTED	PAINT	ACT	10'-0"	N	N	
135	TOILET	TILE	TILE	EPOXY PAINT	GYP. BD.	9'-0"	Y	N	

ROOM FINISH GENERAL NOTES:

1. ALL COLORS AND PRODUCT MANUFACTURERS TO BE DETERMINED, AND ARE TO BE REVIEWED WITH ARCHITECT, OWNER, AND LESSEE, TO BE BASED OFF CORPORATE BRANDING PACKAGE.
2. ALIGN FLOORING CHANGES WITH CORNER OF WALL, WHERE APPLICABLE.
3. PROVIDE FLOORING TRANSITION STRIPS AT CHANGE IN FLOORING.
4. TILE FLOORS ARE SLOPED TO DRAINS IN JANITORS CLOSET, PROVIDE FLUSH DRAIN IN RESTROOMS, COORDINATE FLOORING INSTALLATION WITH FLOOR DRAIN INSTALLATION.
5. INSTALL FLOORING BELOW AHU'S.

EXCEL FILE LOCATION:
\\dag.local\data\PC Harrison\Projects\2023 Projects\23071 PanCare Clinic Chipley\B-Design\B5AutoCAD\[23071_ROOM_FINISH_SCHEDULE.xlsx]Rm Finish Sch 2/7/2024 16:21

B3 | ROOM FINISH SCHEDULE

SCALE: NTS

SEMBLUEINC.COM

DAG ARCHITECTS
DAG Architects AR0009694
455 Harrison Ave Suite I Panama City, FL 32401
850.387.1671
www.DAGarchitects.com

BID DOCUMENTS

PANCARE OF FLORIDA, INC.
RENOVATIONS & NEW CONSTRUCTION FOR PANCARE CHIPLEY
1440 MAIN ST, CHIPLEY, FL 32428

PANCARE OF FLORIDA, INC.

REVISIONS:

No.	Description	Date

ROOM FINISH SCHEDULE

PROJECT NUMBER	23071
DATED	02/05/2023

A-601

© 2021 DAG ARCHITECTS, INC. ALL RIGHTS RESERVED NO PART OF THIS DOCUMENT MAY BE COPIED, REPRODUCED OR TRANSMITTED BY ANY MEANS WITHOUT WRITTEN PERMISSION OF DAG ARCHITECTS, INC. THESE DRAWINGS AND SPECIFICATIONS ARE THE PROPERTY AND COPYRIGHT OF DAG ARCHITECTS, INC. AND SHALL NOT BE USED ON ANY OTHER PROJECT OR LOCATION EXCEPT AS DESCRIBED ON THE DRAWINGS, WITHOUT THE PRIOR WRITTEN AGREEMENT OF DAG ARCHITECTS.

G:\PC Harrison\Projects\2023 Projects\23071 PanCare Clinic Chipley\B-Design\B5AutoCAD\A601 Finish Schedule.dwg, A601, 2/7/2024 4:22:05 PM, dbingdon

23071
PRELIMINARY REVIEW SET
02/05/2024

© 2021 DAG ARCHITECTS, INC. ALL RIGHTS RESERVED NO PART OF THIS DOCUMENT MAY BE COPIED, REPRODUCED OR TRANSMITTED BY ANY MEANS WITHOUT WRITTEN PERMISSION OF DAG ARCHITECTS, INC. THESE DRAWINGS AND SPECIFICATIONS ARE THE PROPERTY AND COPYRIGHT OF DAG ARCHITECTS, INC. AND SHALL NOT BE USED ON ANY OTHER PROJECT OR LOCATION EXCEPT AS DESCRIBED ON THE DRAWINGS, WITHOUT THE PRIOR WRITTEN AGREEMENT OF DAG ARCHITECTS.

Z:\CAD\DAG\PanCare - Chipley\1-3-24\P101.dwg, 2/6/2024 12:40:11 PM, Johnson Peaden Engineering

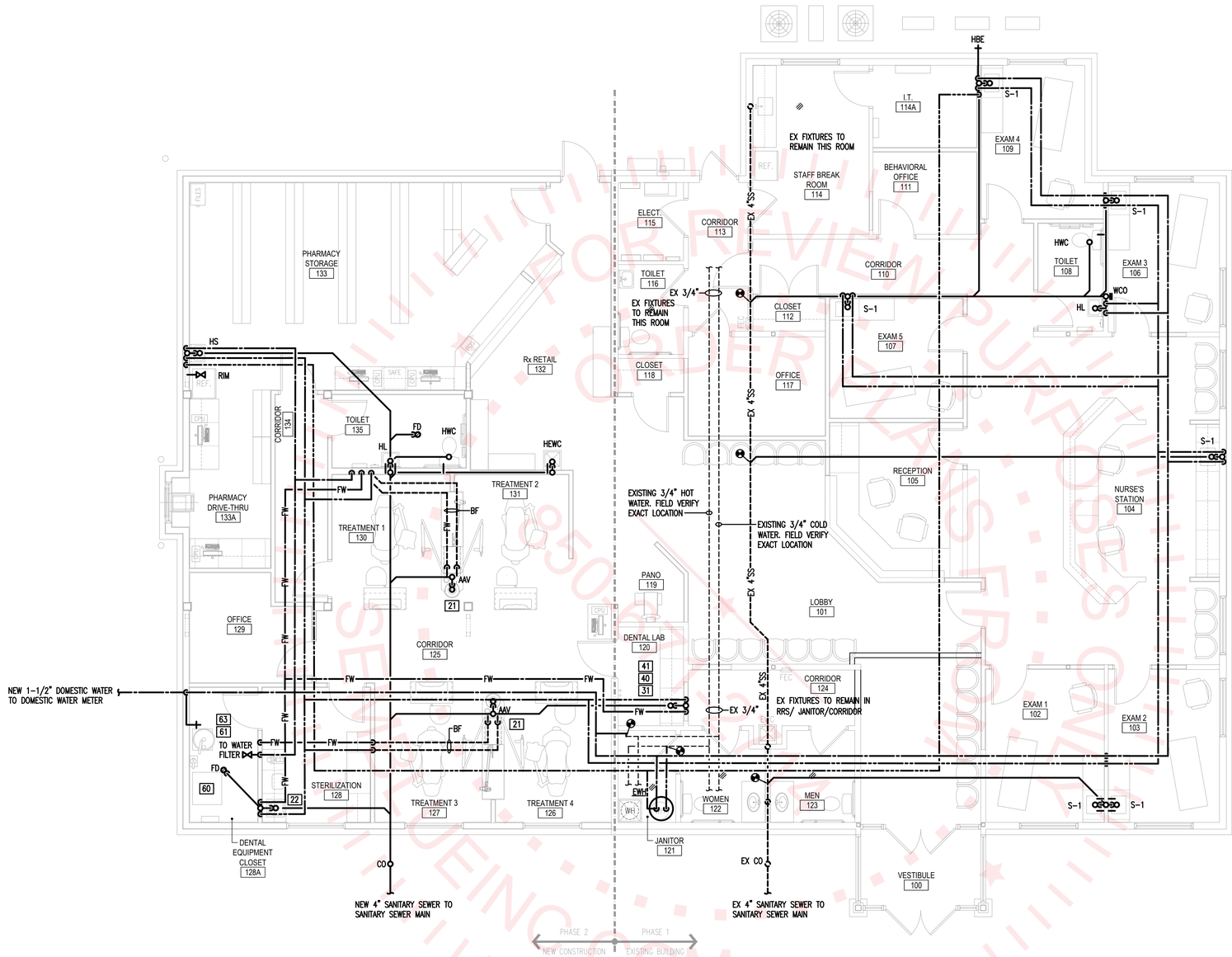

PLAN NORTH

TRUE NORTH

A1	DOMESTIC WATER & SANITARY WASTE PLUMBING FLOOR PLAN
SCALE: 3/16" = 1'-0"	

DAG ARCHITECTS

DAG Architects AR0009694
455 Harrison Ave Suite I Panama City, FL 32401
850.387.1671
www.DAGarchitects.com

BID DOCUMENTS

PANCARE OF FLORIDA, INC.

RENOVATIONS & NEW CONSTRUCTION FOR PANCARE CHIPLEY

1440 MAIN ST, CHIPLEY, FL 32428

PANCARE OF FLORIDA, INC.

REVISIONS:

No.	Description	Date

DOMESTIC WATER & SANITARY WASTE PLUMBING FLOOR PLAN

PROJECT NUMBER	23071
DATED	02/05/2023

P101

23071
PRELIMINARY REVIEW SET
02/05/2024

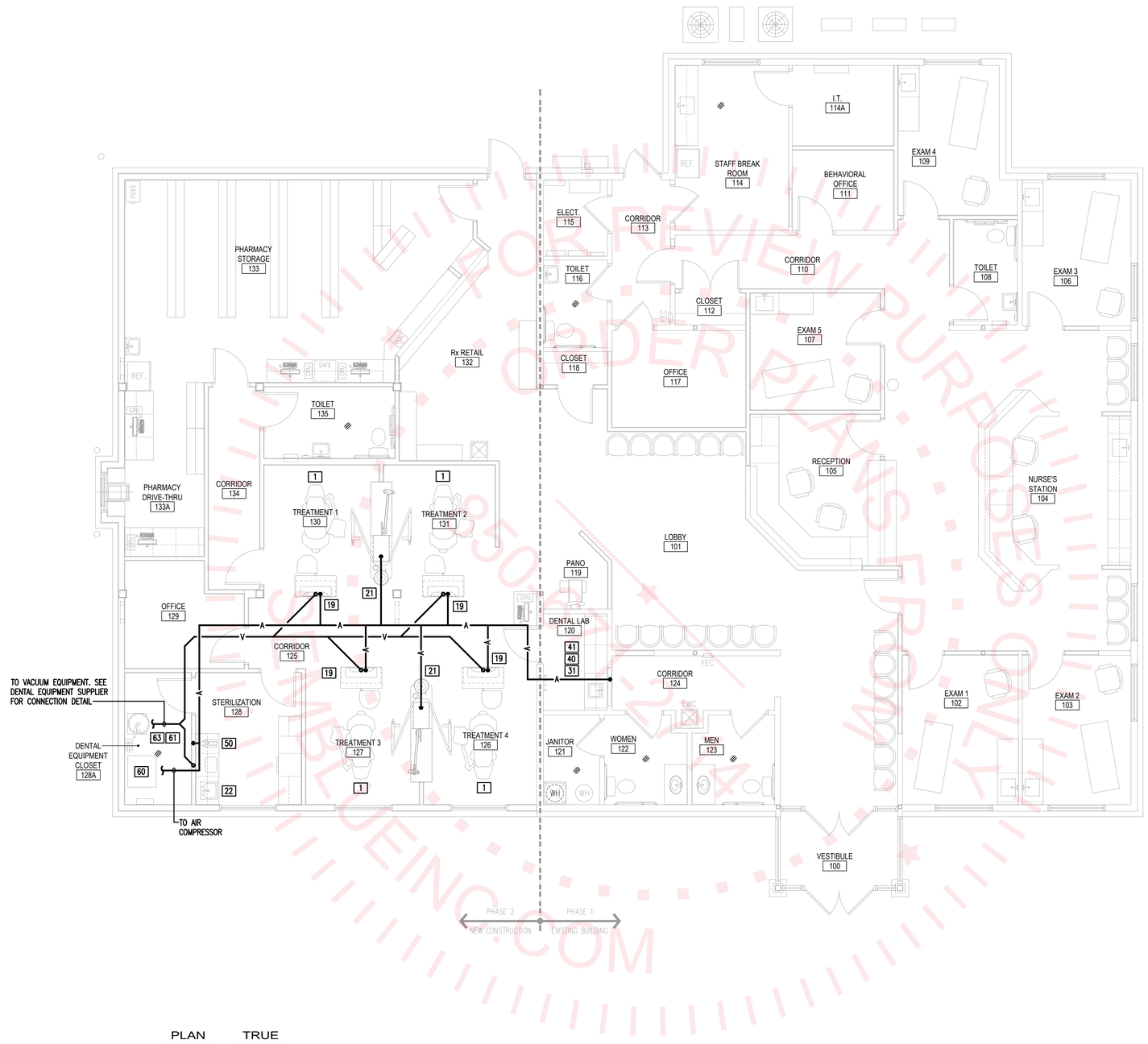

FOR REVIEW PURPOSES ONLY
NOT FOR CONSTRUCTION
DAG ARCHITECTS
850.387.1671
DAG@DAGARCHITECTS.COM

© 2021 DAG ARCHITECTS, INC. ALL RIGHTS RESERVED NO PART OF THIS DOCUMENT MAY BE COPIED, REPRODUCED OR TRANSMITTED BY ANY MEANS WITHOUT WRITTEN PERMISSION OF DAG ARCHITECTS, INC. THESE DRAWINGS AND SPECIFICATIONS ARE THE PROPERTY AND COPYRIGHT OF DAG ARCHITECTS, INC. AND SHALL NOT BE USED ON ANY OTHER PROJECT OR LOCATION EXCEPT AS DESCRIBED ON THE DRAWINGS, WITHOUT THE PRIOR WRITTEN AGREEMENT OF DAG ARCHITECTS.

Z:\CAD\DAG\PanCare - Chipley\1-3-24\P101.dwg, 2/6/2024 12:40:13 PM, Johnson Peaden Engineering

A1 | DENTAL PIPING PLAN
SCALE: 3/16" = 1'-0"

DAG ARCHITECTS
DAG Architects AR0009694
455 Harrison Ave Suite I Panama City, FL 32401
850.387.1671
www.DAGarchitects.com

BID DOCUMENTS

PANCARE OF FLORIDA, INC.
RENOVATIONS & NEW CONSTRUCTION FOR PANCARE CHIPLEY
1440 MAIN ST, CHIPLEY, FL 32428

PANCARE OF FLORIDA, INC.

REVISIONS:

No.	Description	Date

DENTAL PIPING PLAN

PROJECT NUMBER	23071
DATED	02/05/2023

P102

23071
PRELIMINARY REVIEW SET
02/05/2024

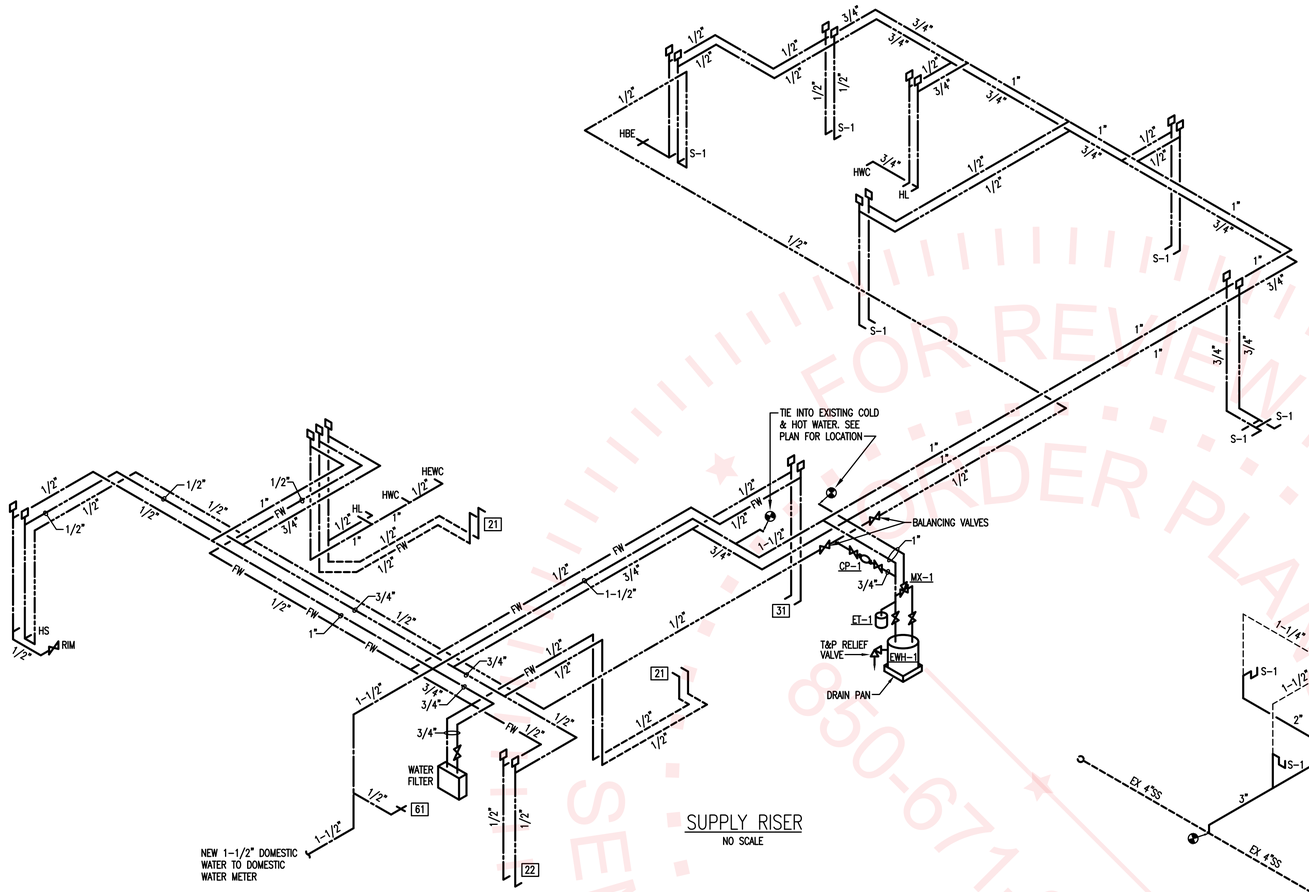

SUPPLY RISER
NO SCALE

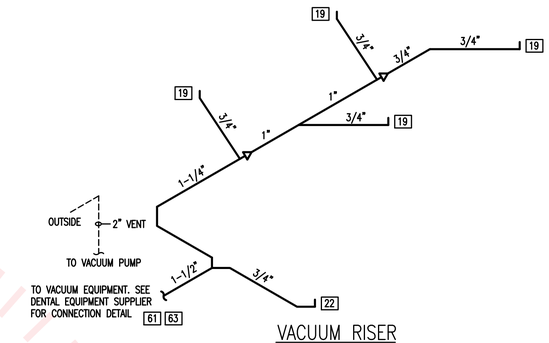

VACUUM RISER
NO SCALE

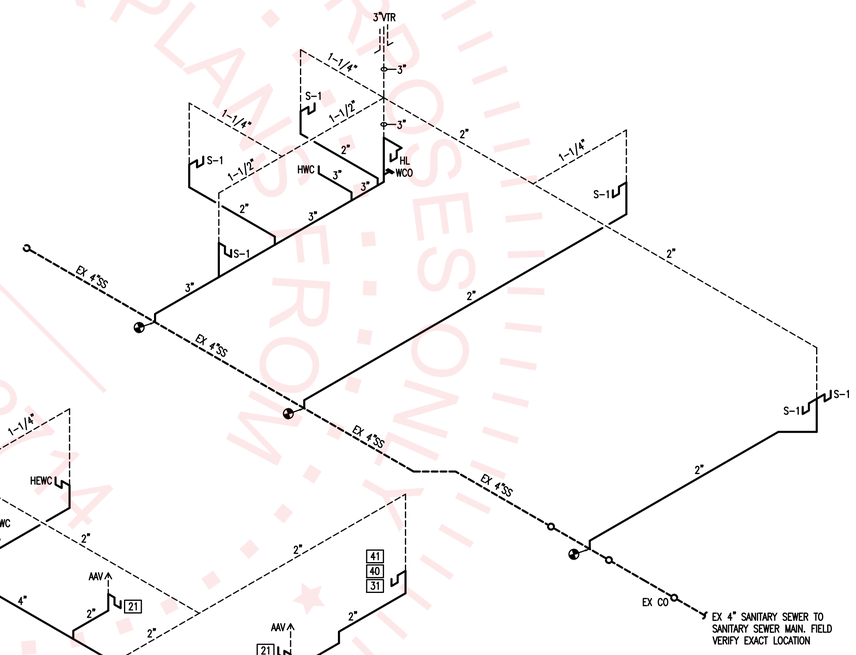

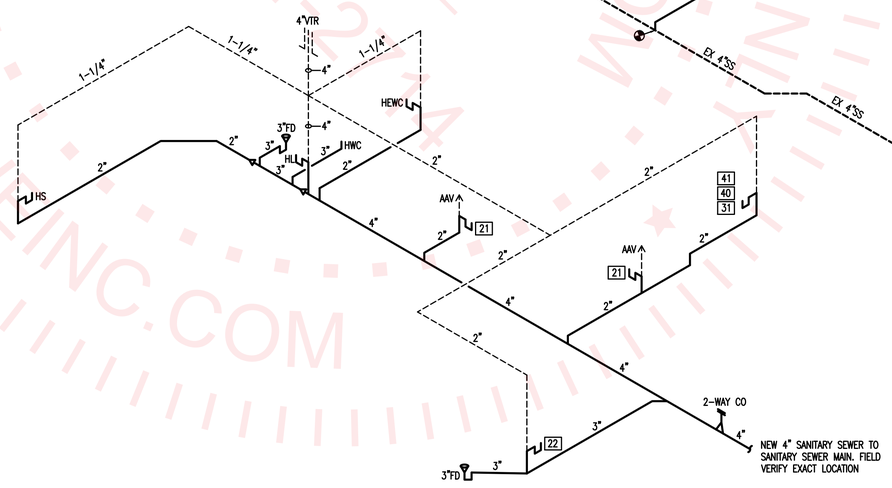

WASTE & VENT RISER
NO SCALE

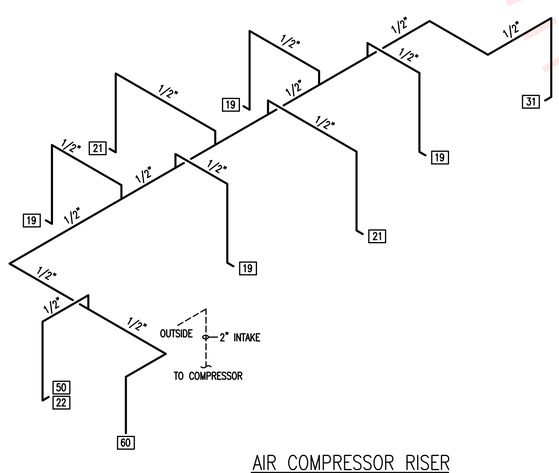

AIR COMPRESSOR RISER
NO SCALE

FOR REVIEW PURPOSES ONLY
NOT FOR CONSTRUCTION
UNDER PLANS REVIEW
850-671-2774
SEMBLUEINC.COM

DAG ARCHITECTS
DAG Architects AR0009694
455 Harrison Ave Suite I Panama City, FL 32401
850.387.1671
www.DAGarchitects.com

BID DOCUMENTS

PANCARE OF FLORIDA, INC.
RENOVATIONS & NEW CONSTRUCTION FOR PANCARE CHIPLEY
1440 MAIN ST, CHIPLEY, FL 32428

PANCARE OF FLORIDA, INC.

REVISIONS:

No.	Description	Date

PLUMBING RISERS

PROJECT NUMBER	23071
DATED	02/05/2023

P201

© 2021 DAG ARCHITECTS, INC. ALL RIGHTS RESERVED NO PART OF THIS DOCUMENT MAY BE COPIED, REPRODUCED OR TRANSMITTED BY ANY MEANS WITHOUT WRITTEN PERMISSION OF DAG ARCHITECTS, INC. THESE DRAWINGS AND SPECIFICATIONS ARE THE PROPERTY AND COPYRIGHT OF DAG ARCHITECTS, INC. AND SHALL NOT BE USED ON ANY OTHER PROJECT OR LOCATION EXCEPT AS DESCRIBED ON THE DRAWINGS, WITHOUT THE PRIOR WRITTEN AGREEMENT OF DAG ARCHITECTS.

Z:\CAD\DAG\PanCare - Chipley\1-3-24\P101.dwg, 2/6/2024 12:40:14 PM, Johnson Peaden Engineering

23071
PRELIMINARY REVIEW SET
02/05/2024

PLUMBING LEGEND

————	SOIL OR WASTE LINE
- - - - - -	EXISTING PIPING
- - - - - -	VENT
—·—·—	COLD WATER (CW)
—··—··—	HOT WATER (HW)
—FW—	FILTERED COLD WATER (FW)
—V—	VACUUM
—A—	COMPRESSED AIR
—⋈—	GATE VALVE
	T & P RELIEF VALVE
—‖—	WALL CLEANOUT
CO	FLOOR CLEANOUT
	SHOCK ABSORBER
	VENT THRU ROOF

PLUMBING FIXTURE SCHEDULE

MARK	FIXTURE	SANITARY	C.W.	H.W.	VACUUM	AIR
HWC	WATER CLOSET, FLOOR, TANK TYPE, ADA COMPLIANT	3"	1/2"	–	–	–
HL	LAVATORY, WALL–HUNG WITH CARRIER, ADA COMPLIANT	1 1/4"	1/2"	1/2"	–	–
HEWC	ELECTRIC WATER COOLER, ADA COMPLAINT, W/ BOTTLE FILLER	1 1/4"	1/2"	–	–	–
HS	HAND SINK	1 1/2"	1/2"	1/2"	–	–
S–1	SINGLE COMPARTMENT SINK (VERIFY REQ'S FOR LAB/PROC. AREAS)	1 1/2"	1/2"	1/2"	–	–
RIM	REFRIGERATOR ICE MAKER CONNECTION	–	1/2"	–	–	–
HBE	HOSE BIBB, EXTERIOR	–	3/4"	–	–	–
1	DENTAL CHAIR	–	–	–	3/4"	1/2"
19	REAR CABINET	–	–	–	3/4"	1/2"
21	CENTRAL CABINET	1 1/2"	1/2"	1/2"	–	1/2"
22	STERILIZATION CABINET	1 1/2"	1/2"	1/2"	3/4"	1/2"
31	LAB CABINETS	1 1/2"	1/2"	1/2"	–	1/2"
40	PLASTER TRAP	–	–	–	–	–
41	MODEL TRIMMER	SINK	–	–	–	–
50	HANDPIECE CLEANER	–	–	–	–	1/2"
60	COMPRESSOR	–	–	–	–	1/2"
61	DRY VACUUM SYSTEM	1–1/2"	1/2"	–	1 1/2"	–
EWH–1	ELECTRIC WATER HEATER, 50 GALLON, 6 kW NON–SIMUL ELEMENTS,					
	208v/3ø, EQUAL TO AO SMITH DEN 40	T&P	1"	1"	–	–
MV–1	LEONARD VALVE TM–26–LF, 3/4" IN & OUT, MAX 5 PSI LOSS,					
	MINIMUM FLOW 1.0 GPM					
ET–1	EXPANSION TANK, 2.1 GALLON, 1.48 GALLON TANK ACCEPTANCE,					
	150 PSI MAXIMUM PRESSURE, EQUAL TO WATTS PLT–5					
CP–1	CIRCULATION PUMP, 6 GPM, 25' HEAD, 115V, 1/6 HP, EQUAL TO					
	BELL & GOSSETT MODEL PL–45					

GENERAL PLUMBING NOTES

1. FURNISH ALL LABOR, MATERIALS AND EQUIPMENT NEEDED TO PROVIDE A COMPLETE PLUMBING SYSTEM. THIS INCLUDES, BUT IS NOT LIMITED TO, WATER PIPING, WASTE AND VENT PIPING, AND ALL NECESSARY VALVES, TRAPS, AND ACCESSORIES.
2. ALL WORK SHALL BE PERFORMED BY SKILLED AND EXPERIENCE WORKMEN. WORK SHALL COMPLY WITH ALL APPLICABLE STATE AND LOCAL CODES. THIS CONTRACTOR SHALL BE RESPONSIBLE FOR ALL REQUIRED PERMITS, LICENSES, AND INSPECTIONS.
3. ROUGH–INS SHALL BE MADE FROM ARCHITECTURAL DRAWINGS AND FIELD VERIFICATION, NOT FROM PLUMBING DRAWINGS AS THEY ARE ONLY SCHEMATIC. THIS CONTRACTOR SHALL VERIFY ALL UTILITY LOCATIONS AND TAPS, AND FOR CHECKING ALL ELEVATIONS, GRADES, AND INVERTS BEFORE THE START OF CONSTRUCTION. IF UNSATISFACTORY CONDITIONS EXIST, NOTIFY THE ARCHITECT IMMEDIATELY.
4. THIS CONTRACTOR SHALL COORDINATE ALL WORK WITH THE ELECTRICAL, MECHANICAL, AND FIRE PROTECTION CONTRACTORS TO AVOID CONFLICTS WITH OTHER TRADES. MAKE DEVIATIONS AS NECESSARY FROM THE WORK SHOWN ON THE DRAWINGS TO ENSURE THE WORK FITS THE SPACE(S) PROVIDED. NOTIFY THE ARCHITECT OF ALL NECESSARY DEVIATIONS.
5. IF NEW CONNECTIONS REQUIRE INTERRUPTION OF EXISTING SERVICES, ALL PREPARATORY WORK SHALL BE COMPLETED EARLY TO MINIMIZE TIME. WHERE POSSIBLE, PROVIDE TEMPORARY CONNECTIONS TO MAINTAIN UTILITY SERVICE.
6. ALL MATERIALS AND EQUIPMENT SHALL BE NEW AND WITHOUT DEFECTS. SUBMIT SHOP DRAWINGS FOR ALL EQUIPMENT AND MATERIALS. ALL WORK DONE BY THIS CONTRACTOR SHALL BE WARRANTED FOR ONE YEAR FROM THE TIME THE OWNER GIVES ACCEPTANCE OR GAINS BENEFICIAL USE, WHICHEVER IS FIRST.
7. ALL SANITARY AND VENT LINES SHALL BE HUBLESS CAST IRON PIPE CISPI 310–78 STANDARD WEIGHT WITH SPIGOT ENDS FOR COUPLING. HUBLESS CAST IRON JOINTS TO BE CISPI 310 STAINLESS STEEL SHIELD OVER ONE PIECE NEOPRENE SLEEVE. THIS CONTRACTOR MAY USE PVC PIPE AND FITTINGS CONFORMING TO ASTM D–2665 WHERE ALLOWED BY CODE.
8. ROOF PENETRATIONS SHALL BE FLASHED AND MADE WATER–TIGHT IN A MANNER APPROVED BY THE MANUFACTURER OF THE ROOFING MATERIAL AND COMPLYING WITH ARCHITECTURAL REQUIREMENTS.
9. PROVIDE CLEANOUTS WHERE INDICATED ON PLANS AND AS NECESSARY TO COMPLY WITH THE STANDARD PLUMBING CODE. ALL CLEANOUTS SHALL BE IN ACCESSIBLE LOCATIONS.
10. INSULATE ALL DOMESTIC WATER PIPING ABOVE GRADE WITH 3/4" THICK FLEXIBLE CLOSED–CELL POLYETHYLENE INSULATION. SEAL ALL JOINTS AND SEAMS AND INSULATE FITTINGS IN ACCORDANCE WITH THE MANUFACTURER'S INSTRUCTIONS.
11. HANGERS FOR EQUIPMENT AND PIPING SHALL BE SECURED TO THE BUILDING STRUCTURE. NO HANGERS SHALL BE ATTACHED TO THE FLOOR OR ROOF DECK MATERIAL, OR CONCRETE DECKS LESS THAN 4" THICK.
12. INSTALL SHOCK ABSORBERS VERTICALLY AT EACH FIXTURE. OFFSET AS NEEDED TO GAIN A MINIMUM HEIGHT OF 18". ALL SHOCK ABSORBERS SHALL BE A MINIMUM OF ONE PIPE SIZE LARGER THAN THE BRANCH BEING SERVED.
13. PROVIDE CHROME PLATED BRASS ESCUTCHEON PLATES AT ALL PENETRATIONS OF WALLS, FLOORS OR CEILINGS IN FINISHED AREAS AND UNDER LAVATORIES. PROVIDE STOPS AND TRAPS FOR ALL FIXTURES. LEAK TEST WATER PIPING, FOR NOT LESS THAN 90 MINUTES AT 100 PSI. FILL SANITARY SEWER SYSTEM TO A MINIMUM HEIGHT OF TEN FEET AND LET STAND FOR AT LEAST 30 MINUTES WITHOUT LEAKAGE. AFTER PRESSURE TESTS HAVE BEEN MADE, THOROUGHLY FLUSH THE ENTIRE DOMESTIC WATER SYSTEM WITH WATER UNTIL ALL ENTRAINED DIRT AND MUD HAVE BEEN REMOVED, AND STERILIZE. THE STERILIZING MATERIAL SHALL BE EITHER LIQUID CHLORINE CONFORMING THE FED. SPEC. BB–C–120, OR HYPOCHLORITE CONFORMING TO FED. SPEC. O–C–114, OR FED. SPEC. O–S–602M. THE CHLORINATING AGENT SHALL PROVIDE A MINIMUM DOSAGE OF 50 PPM AND SHALL BE RETAINED IN THE SYSTEM FOR 90 MIN. THE SYSTEM WILL THEN BE FLUSHED WITH CLEAN POTABLE WATER UNTIL THE RESIDUAL CHLORINE IS REDUCED TO LESS THAN 1.0 PPM. HAVE THREE STATE–APPROVED INDEPENDENT TESTING FACILITIES TAKE SAMPLES AND DELIVER CERTIFICATES OF APPROVAL TO THE OWNER. ANY NEGATIVE RESULTS MUST BE INVESTIGATED, AND IF NECESSARY CORRECTED, BEFORE THE BUILDING MAY BE ACCEPTED.

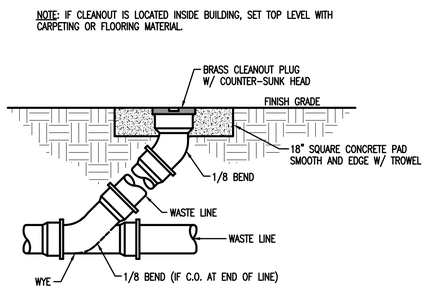

CLEANOUT DETAIL
NOT TO SCALE

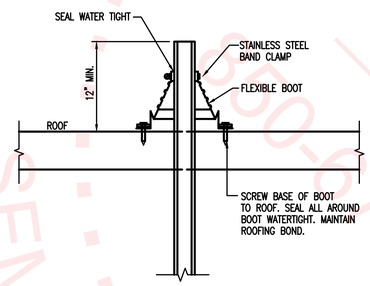

VENT THROUGH ROOF DETAIL
NOT TO SCALE

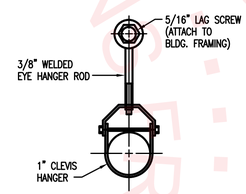

HANGER DETAIL (TYPICAL)
NO SCALE

NOTE: USE APPROPRIATE HANGER AS APPROVED IN NFPA–13–A–3–15–1.

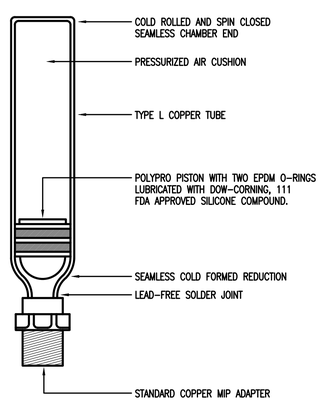

WATER HAMMER ARRESTER
NOT TO SCALE

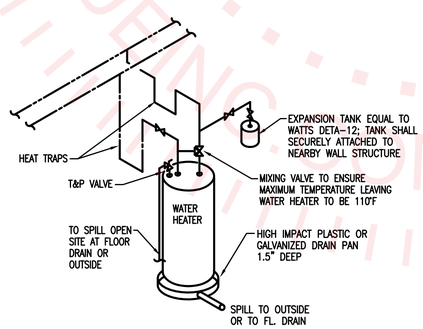

DOMESTIC HOT WATER INSTALLATION DETAIL
NOT TO SCALE

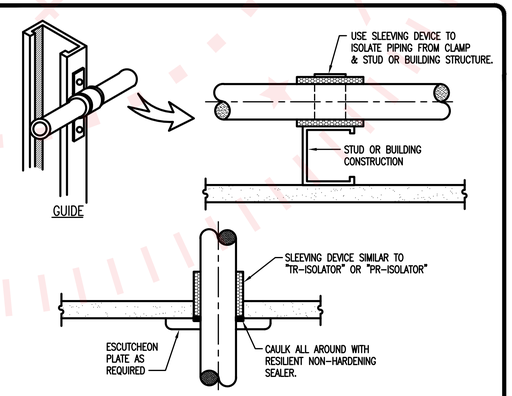

PENETRATION

DETAIL OF CONSTRUCTION PENETRATIONS & GUIDES FOR CONTROL OF PLUMBING NOISE & VIBRATION
NO SCALE

© 2021 DAG ARCHITECTS, INC. ALL RIGHTS RESERVED NO PART OF THIS DOCUMENT MAY BE COPIED, REPRODUCED OR TRANSMITTED BY ANY MEANS WITHOUT WRITTEN PERMISSION OF DAG ARCHITECTS, INC. THESE DRAWINGS AND SPECIFICATIONS ARE THE PROPERTY AND COPYRIGHT OF DAG ARCHITECTS, INC. AND SHALL NOT BE USED ON ANY OTHER PROJECT OR LOCATION EXCEPT AS DESCRIBED ON THE DRAWINGS, WITHOUT THE PRIOR WRITTEN AGREEMENT OF DAG ARCHITECTS.

Z:\CAD\DAG\PanCare - Chipley\1-3-24\P101.dwg, 2/6/2024 12:40:14 PM, Johnson Peaden Engineering

DAG ARCHITECTS
DAG Architects AR0009694
455 Harrison Ave Suite I Panama City, FL 32401
850.387.1671
www.DAGarchitects.com

BID DOCUMENTS

PANCARE OF FLORIDA, INC.
RENOVATIONS & NEW CONSTRUCTION FOR PANCARE CHIPLEY
1440 MAIN ST, CHIPLEY, FL 32428

PANCARE OF FLORIDA, INC.

REVISIONS:

No.	Description	Date

PLUMBING NOTES, LEGEND, SCHEDULE, & DETAILS

PROJECT NUMBER	23071
DATED	02/05/2023

P202

23071
PRELIMINARY REVIEW SET
02/05/2024

EXISTING OUTDOOR UNITS ODHP-2, MSAC-1, AND MSAC-2 WILL REMAIN IN OPERATION AT THEIR EXISTING LOCATIONS. EXISTING UNIT ODHP-1 WILL BE REPLACED (SEE SCHEDULE). EXISTING UNITS MSAC-3 AND MSAC-4 ARE TO BE RELOCATED BEHIND NEW ADDITION (SEE THIS SHEET).

EXISTING UNITS MSAC-3 AND MSAC-4 ARE TO BE RELOCATED BEHIND NEW ADDITION (SEE THIS SHEET).

EXISTING INDOOR UNIT MSAH-1 WILL REMAIN IN OPERATION AT ITS EXISTING LOCATION. EXISTING UNITS MSAH-2, MSAH-3, AND MSAC-4 ARE TO BE RELOCATED; SEE FLOOR PLAN ON THIS SHEET FOR NEW LOCATIONS. RUN CONDENSATE DRAINS TO SPILL OUTSIDE IN GREENS AREAS.

EX LOUVER, 670 CFM OA; RECONNECT OA DUCTS TO NEW RETURN DUCTS. PROVIDE 24v AUTOMATIC DAMPERS IN OA DUCTS

36x12 LOUVER AND BIRDSCREEN; 290 CFM OA, MIN. 1.07 SQ. FT. FREE AREA; GRRENEHCK ESD-435X OR EQUAL

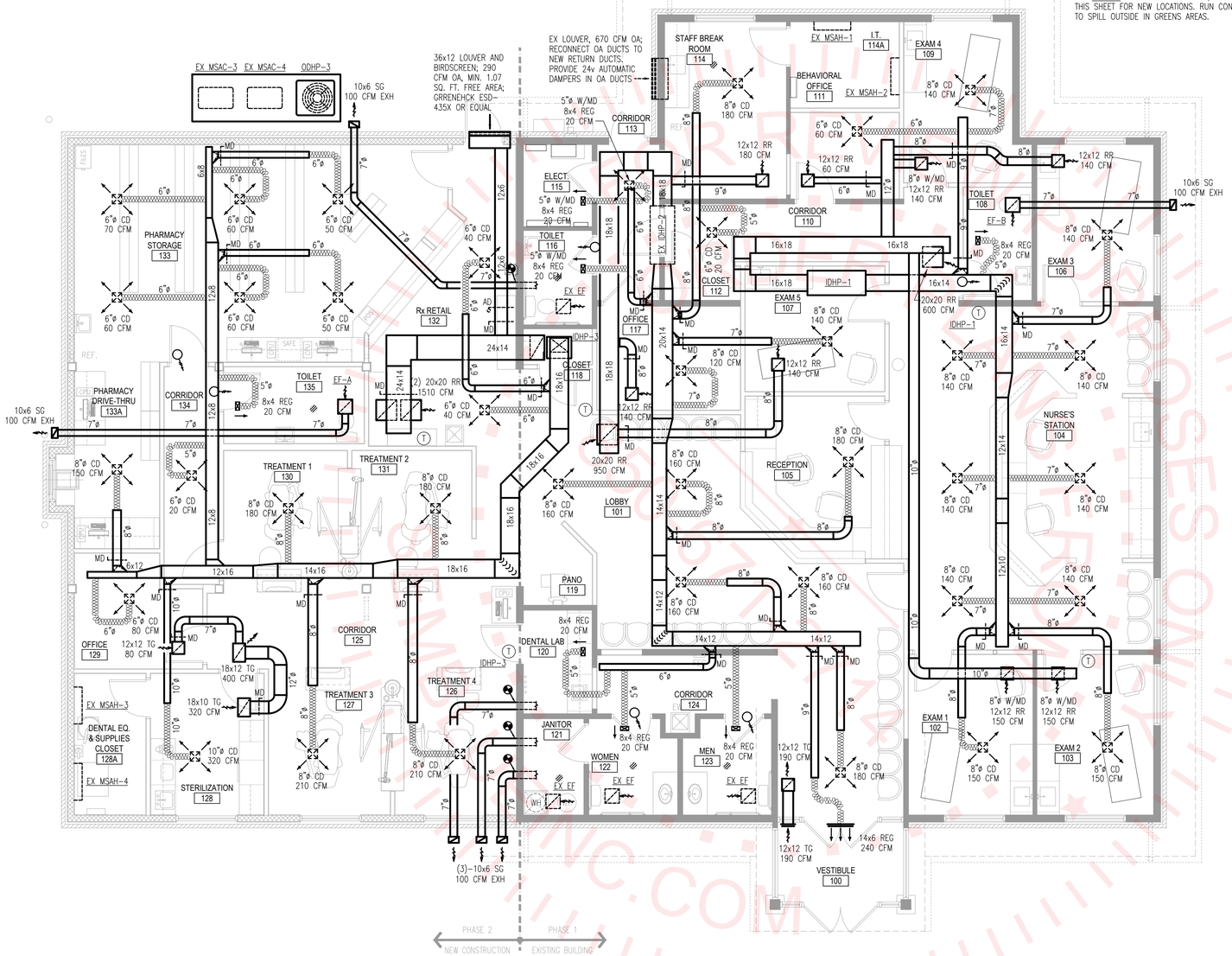

PLAN NORTH

TRUE NORTH

© 2021 DAG ARCHITECTS, INC. ALL RIGHTS RESERVED NO PART OF THIS DOCUMENT MAY BE COPIED, REPRODUCED OR TRANSMITTED BY ANY MEANS WITHOUT WRITTEN PERMISSION OF DAG ARCHITECTS, INC. THESE DRAWINGS AND SPECIFICATIONS ARE THE PROPERTY AND COPYRIGHT OF DAG ARCHITECTS, INC. AND SHALL NOT BE USED ON ANY OTHER PROJECT OR LOCATION EXCEPT AS DESCRIBED ON THE DRAWINGS, WITHOUT THE PRIOR WRITTEN AGREEMENT OF DAG ARCHITECTS.

Z:\CAD\DAG\PanCare - Chipley\1-3-24\M101.dwg, 2/7/2024 1:11:08 PM, Johnson Peaden Engineering

M1 HVAC FLOOR PLAN

SCALE: 3/16" = 1'-0"

JOHNSON PEADEN ENGINEERING INC.
221 Hollywood Blvd NE
Ft Walton Beach, FL 32548
850.244.6189V
1399-M Jenks Ave
Panama City, FL 32401
850.215.4068V
Alabama #CD-2429-E
Arkansas #1654
Florida #00009014
Georgia #PEF003983
Louisiana #EF0006882
Mississippi #E-00000862
Missouri #2018035834
South Carolina #7058
Tennessee #7417
Texas #F-16637

These plans, the ideas and the concepts contained herein including any digital information are the sole property of Johnson, Peaden Engineering, Inc. They are not to be reproduced, copied, modified or changed without the expressed written permission of Johnson, Peaden Engineering, Inc.

JPE Job Number: 2353

DAG ARCHITECTS
DAG Architects AR0009694
455 Harrison Ave Suite I Panama City, FL 32401
850.387.1671
www.DAGarchitects.com

BID DOCUMENTS

PANCARE OF FLORIDA, INC.
RENOVATIONS & NEW CONSTRUCTION FOR PANCARE CHIPLEY
1440 MAIN ST, CHIPLEY, FL 32428

PANCARE OF FLORIDA, INC.

REVISIONS:

No.	Description	Date

HVAC FLOOR PLAN

PROJECT NUMBER	23071
DATED	02/05/2023

M101

23071
PRELIMINARY REVIEW SET
02/05/2024

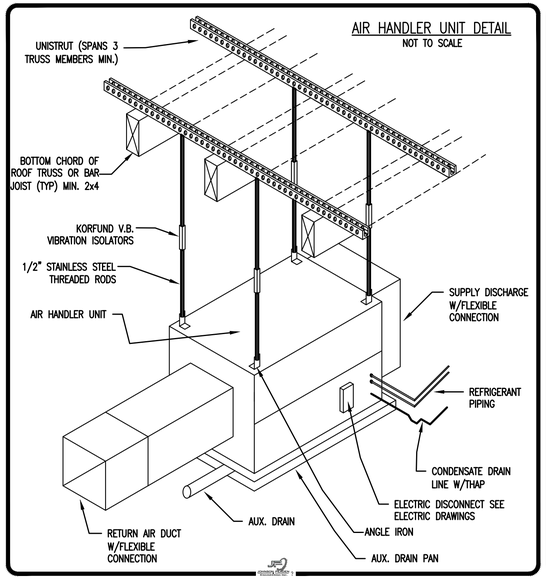

AIR HANDLER UNIT DETAIL
NOT TO SCALE

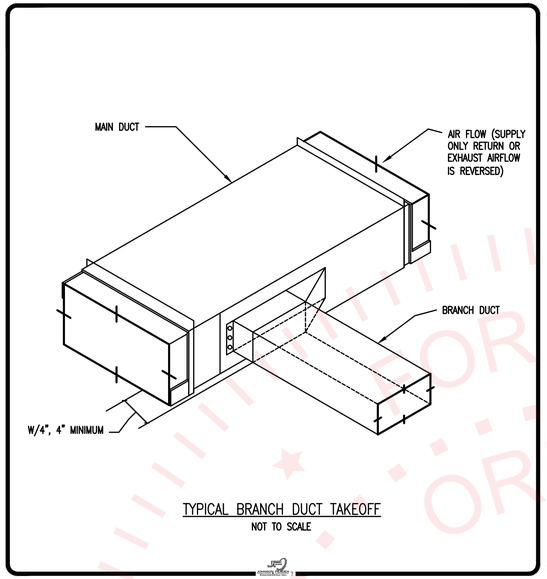

TYPICAL BRANCH DUCT TAKEOFF
NOT TO SCALE

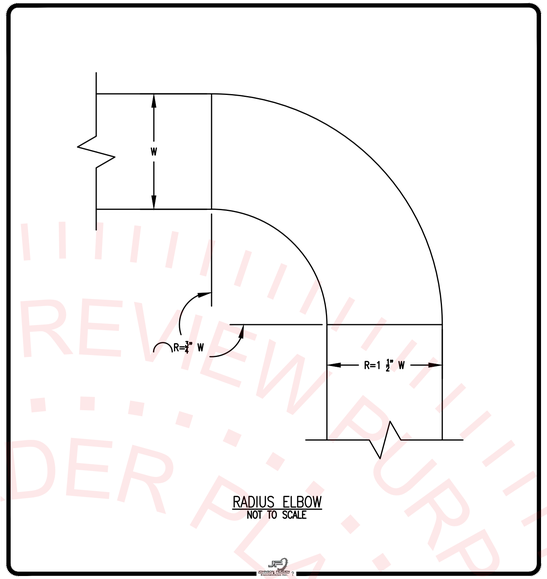

RADIUS ELBOW
NOT TO SCALE

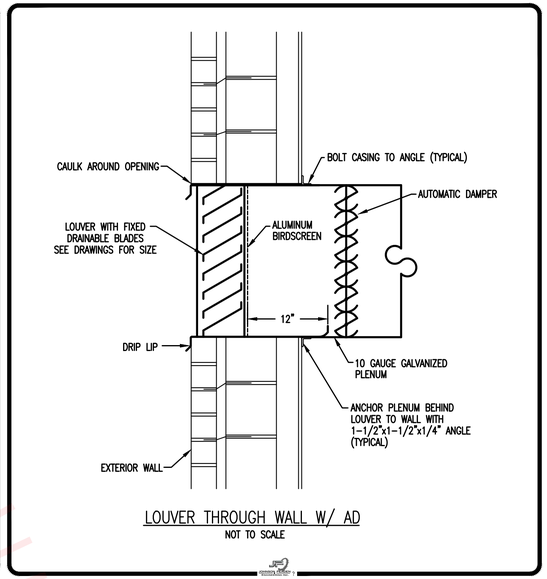

LOUVER THROUGH WALL W/ AD
NOT TO SCALE

MECHANICAL LEGEND

MARK	DESCRIPTION	MARK	DESCRIPTION
CFM	CUBIC FEET PER MINUTE		TIE NEW EQUIPMENT INTO EXISTING
DN	DOWN		TURNING VANES IN DUCT
CD	CEILING DIFFUSER (TITUS TDCA-AA)		
RR	RETURN GRILLE (TITUS 350F)	MD	MANUAL DAMPER
TG	TRANSFER GRILLE (TITUS 350F)		
SG	SOFFIT GRILLE (TITUS 350F)		SUPPLY OR OUTSIDE AIR DUCT IN SECTION
OA	OUTSIDE AIR		
EF	EXHAUST FAN		RETURN OR EXHAUST AIR DUCT IN SECTION
REG	REGISTER (TITUS 300FS)		
RTU	ROOFTOP AIR CONDITIONER	W x H	DUCT SIZE (FIRST DIMENSION AS VIEWED)
	SUPPLY AIR		CEILING TYPE AIR DIFFUSER RECTANGULAR 4-WAY SHOWN
	RETURN OR EXHAUST AIR		
T	THERMOSTAT		
S	SMOKE DETECTOR		CEILING EXHAUST OR RETURN AIR REGISTER
EX	EXISTING		
W/FD	WITH FIRE DAMPER		
	1/2" DOOR UNDERCUT		

GENERAL MECHANICAL NOTES

1. FURNISH ALL LABOR, EQUIPMENT, AND MATERIALS TO PROVIDE A COMPLETE MECHANICAL SYSTEM. DUE TO THE SCHEMATIC NATURE OF THESE PLANS, THE CONTRACTOR SHALL FIELD-VERIFY LOCATIONS FOR EQUIPMENT DUCTWORK, AND ACCESSORIES. IN ADDITION, THIS WORK SHALL BE COORDINATED WITH OTHER TRADES TO AVOID CONFLICTS. THE CONTRACTOR SHALL ALSO REVIEW THE STRUCTURAL DRAWINGS BEFORE FABRICATING AND INSTALLING DUCTWORK OR EQUIPMENT.
2. ALL WORK SHALL BE PERFORMED BY SKILLED AND EXPERIENCED WORKMEN. WORK SHALL COMPLY WITH ALL APPLICABLE STATE AND LOCAL CODES. THIS CONTRACTOR SHALL BE RESPONSIBLE FOR ALL REQUIRED PERMITS, LICENSES, AND INSPECTIONS.
3. ALL MATERIALS SHALL BE NEW AND WITHOUT DEFECTS. SUBMIT SHOP DRAWINGS FOR ALL MATERIALS AND EQUIPMENT. ALL WORK DONE BY THIS CONTRACTOR SHALL BE WARRANTED FOR ONE YEAR FROM THE TIME THE OWNER GIVES ACCEPTANCE OR GAINS BENEFICIAL USE, WHICHEVER IS FIRST. ALL EQUIPMENT SHALL BE INSTALLED PER MANUFACTURER'S RECOMMENDATIONS.
4. DUCT SIZES ON DRAWINGS ARE INSIDE CLEAR DIMENSIONS. DUCT SHALL BE OF LOW-PRESSURE (2.0" w.g.) CONSTRUCTION AS CLASSIFIED BY SMACNA UNLESS OTHERWISE NOTED. ALL DUCT SHALL HAVE MINIMUM 2" EXTERNAL WRAP (MINIMUM R-6.0). LINER MAY ONLY BE USED WHERE REQUIRED FOR SOUND ATTENUATION. DUCTBOARD SHALL NOT BE USED.
5. FLEXIBLE DUCT MAY BE INSTALLED ONLY WHERE SHOWN ON THE DRAWINGS. DUCT SHALL BE EXTERNALLY-INSULATED CORRUGATED METAL WITH A MAXIMUM LENGTH OF 6'-0". FOR TAKE-OFFS LONGER THAN 6'-0", THE REMAINDER OF THE DISTANCE SHALL BE EXTERNALLY-WRAPPED SINGLE-WALL ROUND DUCT WITH A SPIN-IN STYLE TAP AT THE MAIN DUCT.
6. HANGERS FOR EQUIPMENT AND PIPING SHALL BE SECURED TO THE BUILDING STRUCTURE. NO HANGERS SHALL BE ATTACHED TO THE FLOOR OR ROOF DECK MATERIAL, OR CONCRETE DECKS LESS THAN 4" THICK.
7. ALL RETURN AND EXHAUST GRILLES SHALL HAVE OPPOSED-BLADE DAMPERS. ALL SUPPLY-SIDE TAKE-OFFS SHALL HAVE A BALANCING DAMPER.
8. FIRE DAMPERS AND FIRE-STOPPING SHALL BE PROVIDED FOR ANY PENETRATIONS OF FIRE-RATED PARTITIONS. VERIFY LOCATIONS OF ALL FIRE-STOPPING ON THE ARCHITECTURAL DRAWINGS.
9. ALL GRILLES AND REGISTERS SHALL BE EQUAL TO TITUS WITH ALUMINUM CONSTRUCTION. SUPPLY GRILLES SHALL BE EQUAL TO MODEL TDC. SUPPLY REGISTERS SHALL BE EQUAL TO MODEL 301. RETURN, EXHAUST AND TRANSFER GRILLES SHALL BE EQUAL TO MODEL 355 WITH OPPOSED-BLADE DAMPERS. GRILLE FINISH SHALL BE APPROVED BY THE OWNER AND THE ARCHITECT.
10. EQUIPMENT INSTALLED UNDER THIS CONTRACT SHALL BE ABLE TO PROVIDE THE REQUIRED CAPACITIES IN THE MIDDLE OF IT'S PERFORMANCE RANGE. ALL COMPRESSORS SHALL HAVE A MINIMUM 5-YEAR WARRANTY UNLESS OTHERWISE NOTED. THE EQUIPMENT SHALL HAVE ALL THE NECESSARY CONTROLS AND ACCESSORIES TO ALLOW FOR FULL OPERATION. IF EQUIPMENT HAS COMPONENTS OF A VIBRATIVE NATURE, THE CONTRACTOR SHALL PROVIDE THE NECESSARY VIBRATION CONTROLS.
11. REFRIGERANT PIPING SHALL BE HARD-DRAWN TYPE K OR L COPPER WITH COPPER SOLDER FITTINGS. PIPING SHALL BE SOLDERED WITH SILVER SOLDER AND INSULATED WITH 1/2" THICK THERMAL TUBULAR JACKETING. SEAL INSULATION JOINTS WITH TAPE AND CEMENT OR PER MANUFACTURER'S INSTRUCTIONS. PRE-INSULATED AND PRE-CHARGED REFRIGERANT LINES MAY BE USED AS PROVIDED BY THE EQUIPMENT MANUFACTURER. WHERE INSULATION IS EXPOSED TO WEATHER PROTECT LINES WITH AN ALUMINUM COVER AND PAINT TO MATCH EXTERIOR FINISH.
12. CONDENSATE DRAINS SHALL BE FULL-SIZE (3/4" MINIMUM) COPPER OR SCHEDULE 40 PVC. DRAINS SHALL BE INSULATED IN THE SAME MANNER AS REFRIGERANT LINES. DISCHARGE AS SHOWN ON THE DRAWINGS.
13. CONTROLS SHALL BE EQUAL TO MANUFACTURER'S CONTROLS. OUTDOOR UNITS SHALL HAVE FACTORY-WIRED TIME DELAYS, PRESSURE SWITCHES, LOW-AMBIENT CONTROLS AND DEFROST CONTROLS. THERMOSTATS SHALL BE DIGITAL AND PROGRAMMABLE WITH BATTERY BACK-UP. SETPOINTS SHALL FOLLOW DESIGN CONDITIONS OR BE AS DIRECTED BY THE OWNER. MOUNT ALL THERMOSTATS AND TEMPERATURE SENSORS 60" A.F.F.
14. THE HVAC SYSTEM SHALL BE TESTED AND BALANCED ACCORDING TO AABC STANDARDS. THE CONTRACTOR SHALL PROVIDE THE ARCHITECT WITH A COPY OF THE TEST AND BALANCE REPORT AND THE OWNER WITH A LETTER STATING THAT THE SYSTEM(S) HAVE BEEN BALANCED TO WITHIN 10% OF DESIGN PARAMETERS.

AIR HANDLER SCHEDULE

UNIT NO.	SUPPLY AIR CFM	APPROX. E.S.P."W.G.	FAN H.P.	COOLING ENT AIR TEMP	COOLING LVG AIR TEMP	O.A. CFM	OUTDOOR TEMP-COOLING	kW ELEC. HEAT (208 V)	MCA	MOCP	VOLT/PHASE	MAKE/MODEL NUMBER	REMARKS
IDHP-1	1400	0.50	3/4	78.4°FDB/65.7°FWB	56.1°FDB/54.4°FWB	260	95°FDB/77°FWB	7.20 kW	52.0	60	208V/1ø	TRANE TEM6A0C48	1, 2, 3
IDHP-3	1800	0.50	3/4	77.8°FDB/65.1°FWB	56.9°FDB/54.9°FWB	280	95°FDB/77°FWB	7.20 kW	52.0	60	208V/1ø	TRANE TEM6A0C60	1, 2, 3

REMARKS
1. UNIT SHALL BE WIRED FOR SINGLE POINT CONNECTION.
2. AIR HANDLER MOTOR SHALL HAVE RAMPING CAPABILITY AND/OR ECM MOTOR FOR VARIABLE AIRFLOW.
3. UNIT CONTROLS SHALL BE DIGITAL 7-DAY PROGRAMMABLE THERMOSTAT EQUAL TO EQUIPMENT MANUFACTURER'S THERMOSTAT FOR THIS EQUIPMENT AND APPLICATION.

HEAT PUMP CONDENSING UNIT SCHEDULE

UNIT NO.	TOTAL COOLING (MBH)	SENSIBLE COOLING (MBH)	LATENT COOLING (MBH)	SEER2	OUTDOOR TEMP-COOLING (°FDB/°FWB)	HEAT PUMP HEATING CAP (MBH)	COP	HSPF2	FLA	MCA	MOCP	VOLT/PHASE	MAKE/MODEL NUMBER	REMARKS
ODHP-1	46.4	33.3	13.1	16.0	95.0°FDB/77.0°FWB	34.292	4.00	8.10	22.2	28.0	45	208-230/3	TRANE 4TWR6048	1, 2
ODHP-3	54.2	40.2	14.0	15.6	95.0°FDB/77.0°FWB	39.926	3.80	7.80	28.2	35.0	60	208-230/3	TRANE 4TWR6060	1, 2

REMARKS
1. UNIT SHALL HAVE: ANTI-SHORT-CYCLE TIMER, TXV VALVE, LOW AMBIENT COOLING, EVAPORATOR DEFROST, SEACOAST PROTECTION.
2. COMPRESSOR SHALL HAVE MINIMUM TWO-STAGE CAPACITY.

VENTILATION FAN SCHEDULE

MARK	CFM	S.P. "W.G.	MIN. POWER	MAX. RPM	MAX. SONES	FAN TYPE	DRIVE TYPE	EQUAL TO MODEL NUMBER	CONTROL OR INTERLOCK	NOTES
EF-A,B	100	0.25	81 W	973	2.4	CENTR.	DIRECT	GREENHECK SP-A110	LIGHT SWITCH	1, 2

1. ALL FANS SHALL BE COMPLETE WITH BACKDRAFT DAMPERS, DISCONNECT, FILTER, WHITE ALUMINUM GRILLE, ISOLATOR KIT.
2. FAN SPEED CONTROL.

JOHNSON PEADEN ENGINEERING INC.
221 Hollywood Blvd NE
Ft Walton Beach, FL 32548
850.244.6189V
1399-M Jenks Ave
Panama City, FL 32401
850.215.4068V
Alabama #CD-2429-E
Arkansas #1654
Florida #00009014
Georgia #PEF003983
Louisiana #EF0006882
Mississippi #E-00000862
Missouri #2018035834
South Carolina #7058
Tennessee #7417
Texas #F-16637

These plans, the ideas and the concepts contained herein including any digital information are the sole property of Johnson, Peaden Engineering, Inc. They are not to be reproduced, copied, modified or changed without the expressed written permission of Johnson, Peaden Engineering, Inc.

JPE Job Number: 2353

DAG ARCHITECTS
DAG Architects AR0009694
455 Harrison Ave Suite I Panama City, FL 32401
850.387.1671
www.DAGarchitects.com

BID DOCUMENTS

PANCARE OF FLORIDA, INC.
RENOVATIONS & NEW CONSTRUCTION FOR PANCARE CHIPLEY
1440 MAIN ST, CHIPLEY, FL 32428

PANCARE OF FLORIDA, INC.

REVISIONS:

No.	Description	Date

HVAC SCHEDULES, NOTES, AND DETAILS

PROJECT NUMBER 23071
DATED 02/05/2023

M201

FOR REVIEW ONLY
ORDER FLAMINGO
CEMD

© 2021 DAG ARCHITECTS, INC. ALL RIGHTS RESERVED. NO PART OF THIS DOCUMENT MAY BE COPIED, REPRODUCED OR TRANSMITTED BY ANY MEANS WITHOUT WRITTEN PERMISSION OF DAG ARCHITECTS, INC. THESE DRAWINGS AND SPECIFICATIONS ARE THE PROPERTY AND COPYRIGHT OF DAG ARCHITECTS, INC. AND SHALL NOT BE USED ON ANY OTHER PROJECT OR LOCATION EXCEPT AS DESCRIBED ON THE DRAWINGS. WITHOUT THE PRIOR WRITTEN AGREEMENT OF DAG ARCHITECTS.

Z:\CAD\DAG\PanCare - Chipley\1-3-24\M101.dwg, 2/7/2024 1:11:10 PM, Johnson Peaden Engineering

23071
PRELIMINARY REVIEW SET
02/05/2024

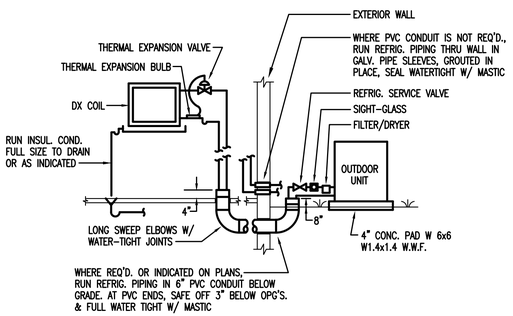

TYPICAL REFRIGERANT PIPING DIAGRAM
NOT TO SCALE

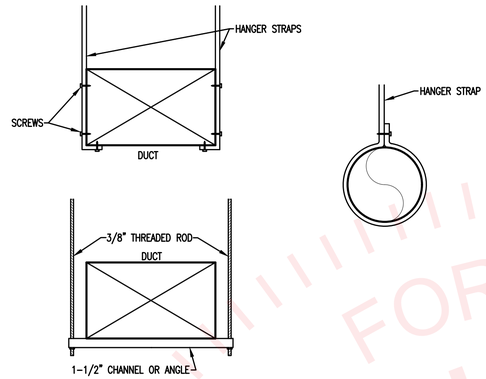

TYPICAL LOW-PRESSURE DUCT HANGERS
NOT TO SCALE

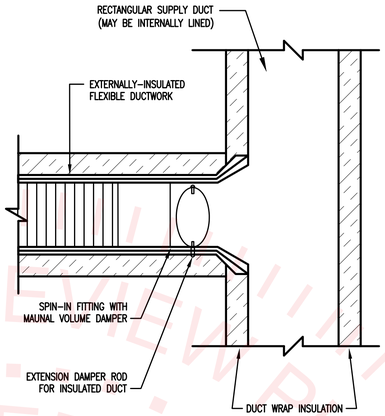

TYPICAL FLEX DUCT TAKEOFF DETAIL
NOT TO SCALE

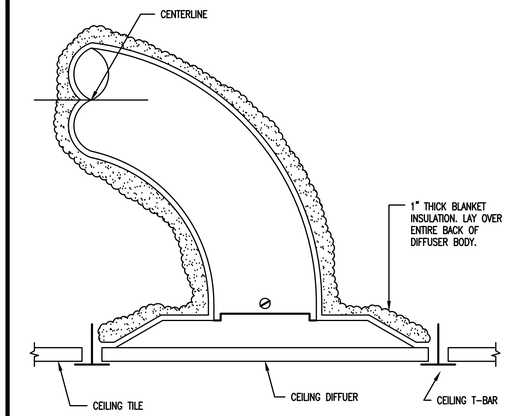

TYPICAL CEILING DIFFUSER DETAIL
NOT TO SCALE

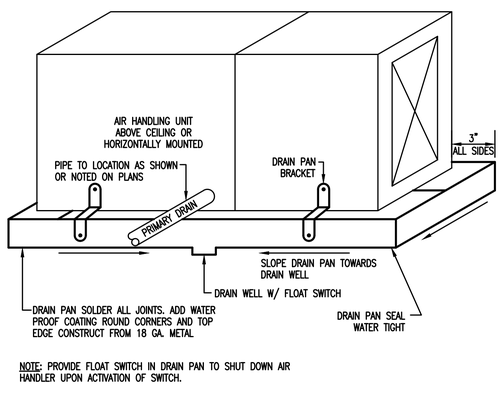

NOTE: PROVIDE FLOAT SWITCH IN DRAIN PAN TO SHUT DOWN AIR HANDLER UPON ACTIVATION OF SWITCH.

DETAIL OF AUXILIARY DRAIN PAN
NO SCALE

NOTES:
1. ALL PADS SHALL BE 6" THICK MINIMUM. EXTERIOR PADS SHALL HAVE AT LEAST 2" BELOW GRADE AND AT LEAST 4" ABOVE GRADE.
2. ANCHORS SHALL EXTEND INTO SLAB MINIMUM 3".
3. SECURE STRAPS AND CABLES TIGHT TO EQUIPMENT WITH MINIMUM 1/8" THICK RUBBERS STRIPS BETWEEN STRAPS/CABLES AND EQUIPMENT.

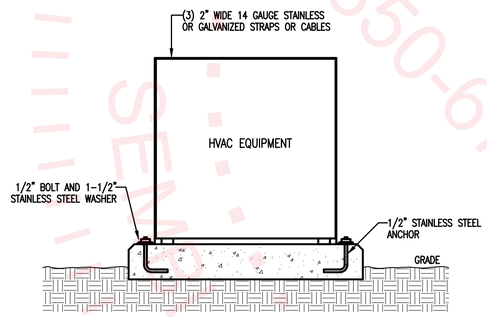

EXTERIOR CONCRETE EQUIPMENT PAD
NOT TO SCALE

NOTE:
RUN WELDED ANGLE BRACKETS FOR AIR HANDLER'S HANDLER'S BASE FOR SUPPORT SO TOP INSULATED SHEET METAL DOES NOT SAG. SEAL AIR HANDLER TO PLENUM AIR TIGHT.

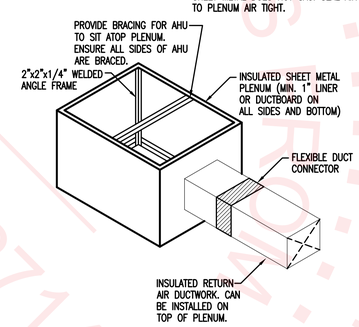

STAND-TYPE RETURN PLENUM
NOT TO SCALE

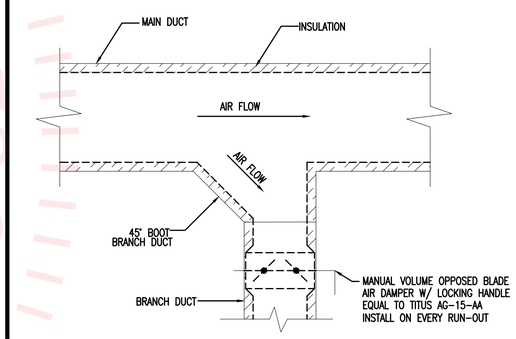

BRANCH DUCT TAP FROM MAIN
NOT TO SCALE

FOR REVIEW PURPOSES ONLY
DO NOT ORDER PLANS
850-674-2714
SEAWINDINC.COM

© 2021 DAG ARCHITECTS, INC. ALL RIGHTS RESERVED NO PART OF THIS DOCUMENT MAY BE COPIED, REPRODUCED OR TRANSMITTED BY ANY MEANS WITHOUT WRITTEN PERMISSION OF DAG ARCHITECTS, INC. THESE DRAWINGS AND SPECIFICATIONS ARE THE PROPERTY AND COPYRIGHT OF DAG ARCHITECTS, INC. AND SHALL NOT BE USED ON ANY OTHER PROJECT OR LOCATION EXCEPT AS DESCRIBED ON THE DRAWINGS. WITHOUT THE PRIOR WRITTEN AGREEMENT OF DAG ARCHITECTS.

Z:\CAD\DAG\PanCare - Chipley\1-3-24\M101.dwg, 2/7/2024 1:11:11 PM, Johnson Peaden Engineering

JOHNSON PEADEN ENGINEERING INC.
221 Hollywood Blvd NE
Ft Walton Beach, FL 32548
850.244.6189V
1399-M Jenks Ave
Panama City, FL 32401
850.215.4068V
Alabama #CD-2429-E
Arkansas #1654
Florida #00009014
Georgia #PEF003983
Louisiana #EF0006882
Mississippi #E-00000862
Missouri #2018035834
South Carolina #7058
Tennessee #7417
Texas #F-16637

These plans, the ideas and the concepts contained herein including any digital information are the sole property of Johnson, Peaden Engineering, Inc. They are not to be reproduced, copied, modified or changed without the expressed written permission of Johnson, Peaden Engineering, Inc.

JPE Job Number: 2353

DAG
ARCHITECTS
DAG Architects AR0009694
455 Harrison Ave Suite I Panama City, FL 32401
850.387.1671
www.DAGarchitects.com

BID DOCUMENTS

PANCARE OF FLORIDA, INC.
RENOVATIONS & NEW CONSTRUCTION FOR PANCARE CHIPLEY
1440 MAIN ST, CHIPLEY, FL 32428

PANCARE OF FLORIDA, INC.

REVISIONS:

No.	Description	Date

HVAC DETAILS

PROJECT NUMBER	23071
DATED	02/05/2023

M202

23071
PRELIMINARY REVIEW SET
09/01/2023

ELECTRICAL GENERAL NOTES

1. CONTRACTOR SHALL COORDINATE ALL WORK WITH OTHER TRADES PRIOR TO INSTALLATION. REFER TO MECHANICAL AND PLUMBING DRAWINGS FOR EXACT SIZE AND LOCATION OF EQUIPMENT WHICH IS FURNISHED BY OTHERS AND CONNECTED BY ELECTRICAL.
2. RECEPTACLES, SWITCHES AND COVERPLATES COLOR SHALL BE SELECTED BY THE ARCH/OWNER FROM STANDARD COLORS.
3. LOCATION OF LIGHTING FIXTURES, DISCONNECT SWITCHES, ETC. FOR MECHANICAL EQUIPMENT/ROOM SHALL BE COORDINATED WITH FINAL MECHANICAL EQUIPMENT LOCATION TO PROVIDE NATIONAL ELECTRIC CODE REQUIRED ACCESS SPACE.
4. FINAL CONNECTION TO ALL MOTORS SHALL BE WITH FLEXIBLE CONDUIT CONNECTION.
5. ALL EXIT AND EMERGENCY FIXTURES SHALL BE CONNECTED TO LIGHT CIRCUIT AHEAD OF LOCAL SWITCH.
6. ALL PANELBOARDS, BACKBOARDS, TERMINAL CABINETS, ETC SHALL HAVE CUSTOM ENGRAVED MICARTA NAMEPLATE AFFIXED IDENTIFYING SYSTEM.
7. GENERAL CONTRACTOR SHALL FIELD–VERIFY ALL EXISTING CONDITIONS PRIOR TO BEGINNING ANY WORK, AND SHALL IMMEDIATELY NOTIFY THE ARCHITECT OF ANY DISCREPANCIES. FAILURE TO DO SO INDICATES THAT THE CONTRACTOR ACCEPTS THE CONDITIONS AS THEY EXIST, AND SHALL PERFORM THE WORK REQUIRED AS SHOWN AND SPECIFIED.
8. THE ELECTRICAL CONTRACTOR SHALL OBTAIN AND REVIEW THE MECHANICAL AND SPECIAL EQUIPMENT SUBMITTALS PRIOR TO SUBMITTING THE ELECTRICAL SUBMITTALS. ANY ELECTRICAL EQUIPMENT, CONDUIT, AND WIRE SIZE CHANGES RESULTING FROM THIS REVIEW SHALL ALSO BE SUBMITTED FOR APPROVAL.
9. COMPLY WITH ALL LOCAL CODE, LAWS, AND ORDINANCES APPLICABLE TO ELECTRICAL WORK, THE STATE BUILDING CODE AND THE NATIONAL ELECTRIC CODE. OBTAIN ALL PERMITS REQUIRED BY LOCAL ORDINANCES.
10. EQUIPMENT GROUNDING CONDUCTOR SHALL BE PULLED IN ALL BRANCH CIRCUIT WIRING. CONDUIT GROUND SHALL NOT BE ACCEPTABLE.
11. FURNISH ALL EQUIPMENT AND LABOR, PERFORM ALL LABOR WITH SUPERVISION, BEAR ALL EXPENSES, AS NECESSARY FOR THE SATISFACTORY COMPLETION OF ALL WORK READY FOR OPERATION.
12. THE ELECTRICAL WORK SHALL BE INSTALLED IN A NEAT AND WORKMANLIKE MANNER. ALL NOT SO INSTALLED SHALL BE REMOVED AND REPLACED AT NO COST TO THE OWNER.
13. ALL CONDUCTORS LESS THAN 60A. SHALL BE COPPER #12 & #10 SOLID, #8 AND LARGER STRANDED, #6 AND SMALLER TO BE TYPE TW, 600 VOLT INSULATION. ALUM. CONDUCTORS MAY BE USED FOR 60A AND LARGER ONLY WHERE USED WITH COMPRESSION TERMINATIONS. TYPE NM CABLE MAY NOT BE USED ON THIS PROJECT.
14. PROVIDE GROUNDING PER NATIONAL ELECTRIC CODE.
15. THE CONTRACTOR SHALL LEAVE THE ENTIRE ELECTRICAL SYSTEM INSTALLED IN PROPER WORKING ORDER, AND SHALL REPLACE WITHOUT ADDITIONAL COST, ALL WORK OR MATERIAL WHICH MAY DEVELOP DEFECTS, (ORDINARY WEAR AND TEAR OR DAMAGE RESULTING FROM IMPROPER HANDLING EXCEPTED) WITHIN A PERIOD OF ONE(1) YEAR FROM THE DATE OF FINAL ACCEPTANCE BY THE OWNER.

DEMOLITION NOTES

1. ALL EXISTING SYSTEMS AND CONDITIONS SHOWN ON THE PLANS ARE APPROXIMATE. THE EXISTING ELECTRICAL CIRCUITS OF POWER, RECEPTACLES, LIGHTING, ETC. BEING REMOVED MAY NOT BE SHOWN ON THESE DOCUMENTS, BUT ARE TO BE REMOVED AS REQUIRED TO BUILD THIS PROJECT AND TO PERMIT NEW FINISHES, WALLS, ETC. THE CONTRACTOR SHALL FIELD VERIFY ALL CONDITIONS PRIOR TO BEGINNING ANY WORK AND SHALL NOTIFY THE ARCHITECT OF DISCREPANCIES. FAILURE TO DO SO INDICATES THAT THE CONTRACTOR ACCEPTS THE CONDITIONS AS THEY EXIST AND SHALL PERFORM ANY ADDITIONAL WORK NECESSARY TO PERFORM THE WORK AS SHOWN AND SPECIFIED.
2. IF A DEVICE IS BEING REMOVED AND THE CIRCUIT FEEDS OTHER LOADS FROM THE DEVICE, THEN THE WIRING SHALL BE MADE CONTINUOUS TO THE REMAINING LOADS. NO CIRCUIT CONTINUITY SHALL BE LOST.
3. IF A DEVICE IS BEING REMOVED AND NOT PART OF A DEMO WALL, THAT LOCATION SHALL BE RESTORED TO MATCH ADJACENT SURFACE.
4. REMOVE ALL DISCONNECTS, WIRING, AND CONDUITS SERVING MECHANICAL EQUIPMENT BEING REMOVED OR RELOCATED.
5. CONTRACTOR TO REMOVE ALL CONDUITS, & ASSOCIATED WIRING FROM DEVICES BEING REMOVED BACK TO PANEL UNLESS NOTED OTHERWISE. WHEN ALL LOADS ON EXISTING BREAKERS ARE REMOVED, RELABEL BREAKER AS 'SPARE'.

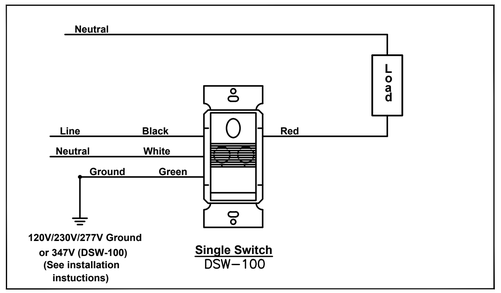

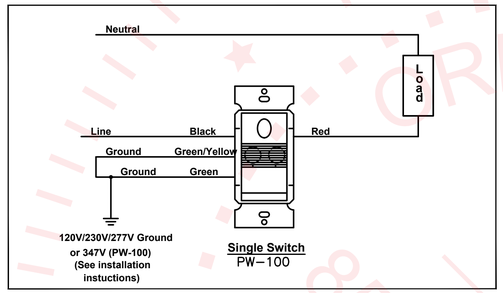

EQUALS TO BE SUBMITTED TO ARCHITECT/ENGINEER 10 DAYS PRIOR TO SUBMITTING BID FOR APPROVAL.

LIGHTING FIXTURE SCHEDULE

MARK	MANUFACTURER AND CATALOG No.	LAMPS No.	LAMPS TYPE	MOUNTING	REMARKS
FL	TGS #IPF-M-40-U-(OPTIONS)-(FINISH)-05-SF-M-FVL-(ACC)	80W	4000K LED	GROUND MOUNT	EXTERIOR GROUND-MOUNTED LED FLAG POLE LIGHT, UNV, SLIPFITTER MOUNT, FINISH BY ARCH.
LD4A	H.E. WILLIAMS 4DR-TL-L10/835-DIM-UNV-OW-OF-CS-MWT-N-F1	9W	3500K LED	CEILING RECESSED	4" RECESSED DOWNLIGHT, STD 0-10V DIMMING, 120V
LD4B	H.E. WILLIAMS 4DR-TL-L15/835-DIM-UNV-OW-OF-CS-MWT-N-F1	14W	3500K LED	CEILING RECESSED	4" RECESSED DOWNLIGHT, STD 0-10V DIMMING, 120V
LD6A	H.E. WILLIAMS 6DR-TL-L10/835-DIM-UNV-OW-OF-CS-MWT-N-F1	9W	3500K LED	CEILING RECESSED	6" RECESSED DOWNLIGHT, STD 0-10V DIMMING, 120V
LD6B	H.E. WILLIAMS 6DR-TL-L20/835-DIM-UNV-OW-OF-CS-MWT-N-F1	19W	3500K LED	CEILING RECESSED	6" RECESSED DOWNLIGHT, STD 0-10V DIMMING, 120V
LDO	H.E. WILLIAMS #8DR-L40-840-DIM-UNV-OM-CS-WET/CC-N-F1	46W	4000K LED	CEILING RECESSED	8" RECESSED DOWNLIGHT, STD 0-10V DIMMING, UNV, WET LOC
LF2	DAYBRITE #2FPZ-38L-835-2-DS-UNV-DIM	34W	3500K LED	CEILING LAY-IN	2'X2' LED FLAT PANEL LAY-IN, STD 0-10V DIMMING, 120V.
LF4A	DAYBRITE #2FPZ-30L-835-4-DS-UNV-DIM	23W	3500K LED	CEILING LAY-IN	2'X4' LED FLAT PANEL LAY-IN, STD 0-10V DIMMING, 120V.
LF4B	DAYBRITE #2FPZ-48L-835-4-DS-UNV-DIM	37W	3500K LED	CEILING LAY-IN	2'X4' LED FLAT PANEL LAY-IN, STD 0-10V DIMMING, 120V.
LF4C	DAYBRITE #2FPZ-54L-835-4-DS-UNV-DIM	42W	3500K LED	CEILING LAY-IN	2'X4' LED FLAT PANEL LAY-IN, STD 0-10V DIMMING, 120V.
LF4D	DAYBRITE #2FPZ-60L-835-4-DS-UNV-DIM	47W	3500K LED	CEILING LAY-IN	2'X4' LED FLAT PANEL LAY-IN, STD 0-10V DIMMING, 120V.
LF4F	DAYBRITE #2FPZ-74L-835-4-DS-UNV-DIM	58W	3500K LED	CEILING LAY-IN	2'X4' LED FLAT PANEL LAY-IN, STD 0-10V DIMMING, 120V.
PL	OWNER-SELECTED PENDANT-MOUNTED DECORATIVE FIXTURE	50W	3500K LED	PDT-MT; FIELD-COORD EXACT HT	120V DECORATIVE PENDANT TO BE SELECTED BY OWNER, 3500K
UC4	H.E. WILLIAMS 1SF-4-L24-835-AF12125-WRS/120-DIM-120	21W	3500K LED	SURFACE MOUNT	1" X 48" UNDER-CTR LIGHT W/ ROCKER SWITCH, 120V
X/XA XC/XCA	CHLORIDE #CXL-3-R-W (AC ONLY)	1	LED	CEILING/WALL MOUNT	THERMOPLASTIC LED EXIT SIGN, 120V, USE PUNCH-OUTS TO SHOW DIRECTIONAL ARROWS AS DENOTED ON DRAWING(S)
WB36	H.E. WILLIAMS VWPH-L30-740-T3-SDGL-DIM-UNV	36W	4000K LED	WALL MOUNT	EXTERIOR WALLPACK, FINISH BY ARCH, 120V...

*PRIOR TO ORDER, VERIFY ALL FINISHES WITH ARCHITECT PRIOR TO ORDER.
*EXACT FIXTURE AND ACCESSORIES TO BE VERIFIED WITH ARCHITECT DURING BID. ALL FINISHES TO BE SELECTED BY ARCHITECT.

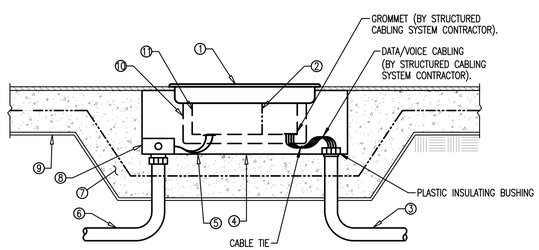

FLOOR BOX INSTALLATION DETAIL
NOT TO SCALE

FLOOR BOX INSTALLATION DETAIL KEYNOTES:

1. FLOOR BOX PER PANCARE STANDARDS. REFER TO ARCHITECT FOR DETAILS.
2. POWER/COMMUNICATIONS PARTITION PLATE, BY ELECTRICAL CONTRACTOR
3. 1" HOMERUN COMMUNICATIONS CONDUIT BY STRUCTURED CABLING SYSTEM CONTRACTOR, RUN UNDERFLOOR TO SERVING COMMUNICATIONS RACK.
4. FLOOR BOX CONCRETE FORM BOX BARTHELMES MFG.CO. TELEPHONE #(716)328-8140 PART NUMBER U135806,BY ELECTRICAL CONTRACTOR.
5. "SO" CORD TO EACH RECEPTACLE. PROVIDE "CG" CONNECTION AT EACH END, BY ELECTRICAL CONTRACTOR
6. POWER CONDUIT WITH WATERTIGHT FITTINGS, BY ELECTRICAL CONTRACTOR.
7. CONCRETE FLOOR SLAB, MAINTAIN THICKNESS AND CONSTRUCTION AROUND AND UNDER FORM BOX AS REQUIRED BY ARCHITECTURAL/STRUCTURAL DRAWINGS FOR STANDARD FLOOR CONSTRUCTION
8. GALVANIZED BOX W/BLANK COVER, BY ELECTRICAL CONTRACTOR
9. WATERPROOF MEMBRANE, MAINTAIN CONTINUOUS UNDER FORM BOX AS REQUIRED BY ARCHITECTURAL/STRUCTURAL DRAWINGS FOR STANDARD FLOOR CONSTRUCTION.
10. FLOOR BOX SHROUD, BY ELECTRICAL CONTRACTOR.
11. FLOOR BOX FRAME, BY ELECTRICAL CONTRACTOR.

ELECTRICAL LEGEND

CEILING OUTLETS

- RECESSED 2' X 4' FLUORESCENT/LED FIXTURE MARK "A" CIRCUIT TYPICAL
- NL RECESSED 2' X 4' FLUORESCENT/LED FIXTURE INSTALLED FOR CONTINUOUS OPERATION
- INDICATES FIXTURE WITH EMERGENCY UNIT BATTERY PACK
- SURFACE MOUNTED, RECESSED OR SUSPENDED FLUORESCENT/LED FIXTURE MARK "A" AS NOTED
- SURFACE MOUNTED FLUORESCENT/LED STRIP FIXTURE MARK "FS" AS NOTED
- EXIT LIGHT
- JUNCTION BOX
- RECESSED/SURFACE MOUNT LIGHT
- NL RECESSED/SURFACE MOUNT LIGHT INSTALLED FOR CONTINUOUS OPERATION
- EF EXHAUST FAN

PANELS AND POWER

- 120/208 VOLT PANELBOARD
- EXISTING 120/208 VOLT PANELBOARD
- NON-FUSIBLE DISCONNECT SWITCH; XX/YY/ZZ WHERE X INDICATES AMPERAGE, Y INDICATES # OF POLES, AND Z INDICATES NEMA RATING

FIRE ALARM SYSTEM

- F FIRE ALARM SYSTEM MANUAL PULL STATION; MT 48" AFF TO C/L
- FIRE ALARM SYSTEM SIGNAL SPEAKER/STROBE; MT 80" AFF TO BOTTOM.
- WP WEATHERPROOF FIRE ALARM SYSTEM SIGNAL SPEAKER; MOUNT 80" AFF TO BOTTOM
- FIRE ALARM SYSTEM STROBE; MT. 80" AFF TO BOTTOM.
- H FIRE ALARM SYSTEM AUTOMATIC HEAT DETECTOR; 135 DEGREE/RATE OF RISE TYPE; CEILING MOUNTED
- FIRE ALARM SYSTEM AUTOMATIC SMOKE DETECTOR; CEILING MOUNTED
- F FIRE ALARM SYSTEM RACEWAY INSTALLED CONCEALED; ARROW INDICATES HOMERUN TO FIRE ALARM CONTROL PANEL
- S FIRE ALARM SYSTEM AUTOMATIC AIR DUCT SMOKE DETECTOR MOUNTED IN SUPPLY AIR DUCT
- R FIRE ALARM SYSTEM AUTOMATIC AIR DUCT SMOKE DETECTOR MOUNTED IN RETURN AIR DUCT
- R NORMALLY CLOSED RELAY IN H.V.A.C CONTROL CIRCUIT TO OPEN UPON ACTUATION OF BUILDING FIRE ALARM SYSTEM TO SHUT DOWN A/C UNIT. CONTACTS RATED 5 AMPS, 120 VOLTS.
- RI REMOTE INDICATOR LIGHT; FIELD-VERIFY EXACT LOCATION OF INSTALLATION
- DH FIRE ALARM SYSTEM MAGNETIC DOOR HOLDERS; WHERE APPLICABLE, EC TO PROVIDE 120V POWER AT DEVICE
- FS FIRE ALARM SYSTEM FLOW SWITCH
- TS FIRE ALARM SYSTEM TAMPER SWITCH

WALL SWITCHES (UNLESS OTHERWISE NOTED, MOUNT 48" A.F.F.)

- S A.C. TYPE, SINGLE POLE, 20 AMP, 120/277 VOLT; MOUNT 48" AFF TO C/L
- S_3 A.C. TYPE, 3-WAY, 20 AMP, 120/277 VOLT; MOUNT 48" AFF TO C/L
- S_4 A.C. TYPE, 4-WAY, 20 AMP, 120/277 VOLT; MOUNT 48" AFF TO C/L
- S_M MOTOR-RATED TOGGLE SWITCH; FIELD-VERIFY EXACT HT & LOCATION WITH EQUIPMENT INSTALLER
- S_R WALL MOUNTED OCCUPANCY SENSOR (PASSIVE INFRARED) EQUAL TO WATTSTOPPER PW-100; SET DELAY OFF TIME FOR 10 MINUTES (120/277V); MOUNT 48" AFF TO C/L
- S_{RD} WALL MOUNTED OCCUPANCY SENSOR EQUAL TO WATTSTOPPER DSW-100; DUAL TECHNOLOGY; MOUNT 48" AFF TO C/L; SET DELAY OFF TIME FOR 10 MINUTES (120/277V)
- S_{R5} 0-10V DIMMING W/ 50%, 75%, & 100% PRE-SETS WALL MOUNTED OCCUPANCY SENSOR (PASSIVE INFRARED) EQUAL TO WATTSTOPPER PW-311; SET DELAY OFF TIME FOR 10 MINUTES (120/277V); MOUNT 48" AFF TO C/L. IF DIMMING IS DESIRED IN A SPACE, A SEPARATE 0-10V 2-WIRE CONTROL CIRCUIT (MIN. 18GA) TO BE INSTALLED FROM DEVICE TO ALL FIXTURES IN ASSOCIATED DIMMING ZONE (FIXTURES TO BE DAISY-CHAINED).
- S_{D5} 0-10V DIMMING W/ 50%, 75%, & 100% PRE-SETS WALL MOUNTED OCCUPANCY SENSOR (PASSIVE INFRARED & ULTRASONIC) EQUAL TO WATTSTOPPER DW-311; SET DELAY OFF TIME FOR 10 MINUTES (120/277V); MOUNT 48" AFF TO C/L. IF DIMMING IS DESIRED IN A SPACE, A SEPARATE 0-10V 2-WIRE CONTROL CIRCUIT (MIN. 18GA) TO BE INSTALLED FROM DEVICE TO ALL FIXTURES IN ASSOCIATED DIMMING ZONE (FIXTURES TO BE DAISY-CHAINED).
- D1 PHILLIPS SUNRISE 1200W ELECTRONIC WALL DIMMER (MODEL# SR1200ZTUNV); EC TO INSTALL 120V HOTLEG (LOAD SIDE OF OCCUPANCY SENSOR SWITCH) TO DIMMING MODULE AND FROM MODULE TO FIXTURE; IN ADDITION, INSTALL A 2-WIRE (#16 AWG) DIMMING CIRCUIT FROM DIMMER MODULE TO LIGHTING FIXTURE(S) TO BE CONTROLLED. WITHIN EACH ZONE, DIMMING CIRCUIT MAY BE DAISY-CHAINED AND NOT SEPARATE RUNS FROM MODULE TO EACH FIXTURE REQUIRED. IF OTHER-THAN-SPECIFIED MANUFACTURERS/FIXTURE TYPES FURNISHED, EC TO VERIFY THAT DIMMING MODULE SUPPLIED TO BE 100% COMPATIBLE WITH FIXTURES TO BE INSTALLED. MOUNT 48" AFF TO C/L. IF EMERGENCY EGRESS FIXTURES W/ BATTERY BACKUP ARE WITHIN ZONE OF CONTROL, INSTALL A SEPARATE NON-SWITCHED 120V HOTLEG FOR CONTINUAL CHARGING OF BATTERIES.

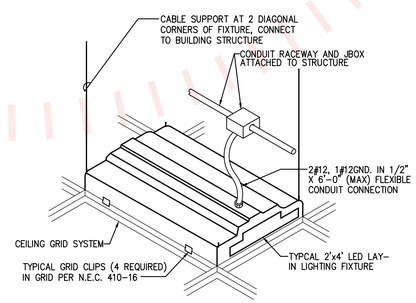

TYPICAL LAY-IN FIXTURE DETAIL
NOT TO SCALE

AUTOMATIC LIGHTING CONTROL SYSTEM

- D1 180° CEILING MOUNTED OCCUPANCY SENSOR EQUAL TO WATTSTOPPER DT-205 (LOW VOLTAGE); DUAL TECHNOLOGY INFRARED AND ULTRASONIC, 2000 SQ FT COVERAGE; SEE CEILING MOUNTED MOTION DETECTOR DETAIL
- D2 360° CEILING MOUNTED OCCUPANCY SENSOR EQUAL TO WATTSTOPPER DT-355 (LINE VOLTAGE); DUAL TECHNOLOGY INFRARED AND ULTRASONIC, 1000 SQ FT COVERAGE; SEE CEILING MOUNTED MOTION DETECTOR DETAIL
- P POWER PACK RELAY EQUAL TO WATTSTOPPER BZ-50 POWER PACK; SEE CEILING MOUNTED MOTION DETECTOR DEVICE TO BE MOUNTED ABOVE CEILING. (UNIVERSAL 100-277V)...20 AMP MAX. SWITCHING CAPABILITY CAPABILITY

BRANCH CIRCUITING

- RUN CONCEALED UNDER FLOOR OR IN GRADE
- RUN CONCEALED IN CEILING OR WALLS
- LA-1 HOMERUN TO PANEL. ANY CIRCUIT WITHOUT FURTHER IDENTIFICATION INDICATES 2#12, 1#12 GROUND-1/2"C; ~~///~~ 3 #12, 1 #12 GROUND – 1/2" C; ~~////~~ 4#12, 1#12 GROUND – 1/2" C; ETC. AS PER NEC. LETTERS AND NUMERALS INDICATE PANEL AND CIRCUIT NUMERALS INDICATE PANEL AND CIRCUIT NUMBER.
- LIQUID-TIGHT FLEXIBLE CONDUIT CONNECTION
- SURFACE MOUNTED CONDUIT; RUN PARALLEL OR PERPINDICULAR TO BUILDING LINES

TELEPHONE & TV SYSTEM

- WALL OUTLET – 4" SQ X 2-1/8" DEEP BOX @18" A.F.F. TO C/L OF DEVICE U.N.O.; INSTALL 3/4"C TO ACCESSIBLE LOCATION ABOVE CEILING. COMMUNICATIONS CONTRACTOR SHALL PROVIDE COVERPLATES, INSERTS, ETC.
- C WALL OUTLET – 4" SQ X 2-1/8" DEEP BOX @ 6" ABOVE COUNTER TO C/L OF DEVICE U.N.O.; INSTALL 3/4"C TO ACCESSIBLE LOCATION ABOVE CEILING. COMMUNICATIONS CONTRACTOR SHALL PROVIDE COVERPLATES, INSERTS, ETC.;
- C,H WALL OUTLET – 4" SQ X 2-1/8" DEEP BOX @ 6" HORIZONTALLY ABOVE COUNTER TO C/L OF DEVICE; INSTALL 3/4"C TO ACCESSIBLE LOCATION ABOVE CEILING; COMMUNICATIONS CONTRACTOR SHALL PROVIDE COVERPLATES, INSERTS, ETC.
- CBB 3/4" (60" HIGH) TELEPHONE BACKBOARD EXTERIOR GRADE PLYWOOD WITH TWO COATS OF INSULATING VARNISH, SIZE AS SHOWN
- TV TELEVISION CABLE WALL OUTLET – 4" SQ X 2-1/8" DEEP BOX; INSTALL 3/4"C TO ACCESSIBLE LOCATION ABOVE CEILING. COMMUNICATIONS CONTRACTOR SHALL PROVIDE COVERPLATES, INSERTS, ETC...MOUNT 18" A.F.F. TO C/L OF DEVICE U.N.O.

WALL OUTLETS

- DUPLEX RECEPTACLE – 20 AMP, 125 VOLT, 2 POLE, 3 WIRE GROUNDED TYPE, NEMA 5-20R. MOUNT 18" A.F.F. UNLESS NOTED OTHERWISE
- T DUPLEX RECEPTACLE – 20 AMP, 125 VOLT, 2 POLE, 3 WIRE GROUNDED TYPE, NEMA 5-20R. MOUNT 18" A.F.F. UNLESS NOTED OTHERWISE. 'TAMPER RESISTANT'
- G DUPLEX RECEPTACLE – 20 AMP, 125 VOLT, GFI, 2 POLE, 3 WIRE GROUNDED TYPE, NEMA 5-20R. MOUNT 18" A.F.F. UNLESS NOTED OTHERWISE
- H DUPLEX RECEPTACLE – 20 AMP, 125 VOLT, 2 POLE, 3 WIRE GROUNDED TYPE, NEMA 5-20R. MOUNT 18" A.F.F. UNLESS NOTED OTHERWISE. 'H' DENOTES DEVICE TO BE MOUNTED HORIZONTALLY
- WP DUPLEX WEATHERTIGHT/WEATHER-RESISTANT (WR) RECEPTACLE – 20 AMP, 125 VOLT, GFI, 2 POLE, 3 WIRE GROUNDED TYPE, NEMA 5-20R. MOUNT 18" A.F.F. UNLESS NOTED OTHERWISE; PROVIDE WEATHERPROOF BOX FOR RECEPTACLE. DEVICE MUST COMPLY WITH NEC 406.9
- DUPLEX RECEPTACLE – 20 AMP, 125 VOLT, 2 POLE, 3 WIRE GROUNDED TYPE, NEMA 5-20R. MOUNT FLUSH IN CEILING
- DUPLEX RECEPTACLE – 20 AMP, 125 VOLT, 2 POLE, 3 WIRE GROUNDED TYPE, NEMA 5-20R. MOUNT ADJACENT TO TELEVISION OUTLET AT SAME HEIGHT.
- DUPLEX RECEPTACLE – 20 AMP, 125 VOLT, 2 POLE, 3 WIRE GROUNDED TYPE, NEMA 5-20R. MOUNT 6" ABOVE COUNTER
- G DUPLEX RECEPTACLE – 20 AMP, 125 VOLT, GFI, 2 POLE, 3 WIRE GROUNDED TYPE, NEMA 5-20R. MOUNT 6" ABOVE COUNTER
- G,H DUPLEX RECEPTACLE – 20 AMP, 125 VOLT, GFI, 2 POLE, 3 WIRE GROUNDED TYPE, NEMA 5-20R. MOUNT 6" ABOVE COUNTER..HORIZONTALLY
- DUPLEX RECEPTACLE – 20 AMP, 125 VOLT, GFI, 2 POLE, 3 WIRE GROUNDED TYPE, NEMA GF-5-20R. MOUNT 26" AFF TO C/L FOR DRINKING FOUNTAIN
- QUADRAPLEX RECEPTACLE – 20 AMP, 125 VOLT, 2 POLE, 3 WIRE GROUNDED TYPE, NEMA 5-20R. MOUNT 18" A.F.F. UNLESS NOTED OTHERWISE
- H QUADRAPLEX RECEPTACLE – 20 AMP, 125 VOLT, 2 POLE, 3 WIRE GROUNDED TYPE, NEMA 5-20R. MOUNT 18" A.F.F. UNLESS NOTED OTHERWISE 'H' DENOTES DEVICE TO BE MOUNTED HORIZONTALLY
- 240V RECEPTACLE – MOUNT 18" AFF UNLESS NOTED OTHERWISE; VERIFY TYPE REQUIRED WITH EQUIPMENT FURNISHED
- J JUNCTION BOX WITH BLANK SCREW COVER AND FLEXIBLE CONDUIT CONNECTION
- SURFACE-MOUNTED JUNCTION BOX WITH BLANK SCREW COVER (UNLESS DEVICE SHOWN TO BE INSTALLED); SIZE OF BOX TO BE DETERMINED BY DEVICE BEING INSTALLED
- WALL MOUNTED EXIT LIGHT
- WALL MOUNTED HIGH INTENSITY DISCHARGE FIXTURE
- WALL MOUNTED EMERGENCY UNIT BATTERY PACK
- WALL MOUNTED EXIT LIGHT/BATTERY PACK COMBO FIXTURE
- P SIDEWALL PHOTOCELL EQUAL TO TORK #2101 (120V)
- DUPLEX RECEPTACLE – 20 AMP, 125 VOLT, 2 POLE, 3 WIRE GROUNDED TYPE, NEMA 5-20R. MOUNT 18" A.F.F. UNLESS NOTED OTHERWISE; LABEL "COMPUTER USE ONLY"

MISCELLANEOUS

- A.F.F. ABOVE FINISH FLOOR
- B.F.C. BELOW FINISHED CEILING
- e EXISTING

WATFORD ENGINEERING
4452 Clinton Street Marianna, Florida 32446
311 N. College St. Office 101B Auburn, AL 36830
Florida CA Number: 27825
Anthony L Davis, PE
Florida License Number: 57419
850.526.3447
Project Number: 2023-091
Checked By: ALD
Drawn By: KEF

DAG ARCHITECTS
DAG Architects AR0009694
455 Harrison Ave Suite 1 Panama City, FL 32401
850.387.1671
www.DAGarchitects.com

BID DOCUMENTS

PANCARE OF FLORIDA, INC.
RENOVATIONS & NEW CONSTRUCTION FOR PANCARE CHIPLEY
1440 MAIN ST, CHIPLEY, FL 32428

PANCARE OF FLORIDA, INC.

REVISIONS:

No.	Description	Date

GENERAL NOTES AND LEGEND

PROJECT NUMBER	23071
DATED	02/05/2024

E001

© 2021 DAG ARCHITECTS, INC. ALL RIGHTS RESERVED. NO PART OF THIS DOCUMENT MAY BE COPIED, REPRODUCED OR TRANSMITTED BY ANY MEANS WITHOUT WRITTEN PERMISSION OF DAG ARCHITECTS, INC. AND SHALL NOT BE USED ON ANY OTHER PROJECT OR LOCATION EXCEPT AS DESCRIBED ON THE DRAWINGS, WITHOUT THE PRIOR WRITTEN AGREEMENT OF DAG ARCHITECTS. ARE THE PROPERTY AND COPYRIGHT OF DAG ARCHITECTS, INC.

23071
PRELIMINARY REVIEW SET
09/01/2023

CIRCUIT BREAKER PANEL SCHEDULE
EXISTING PANEL 'MP'

120/208 VOLT 3ø 4W
600 AMP MAIN BREAKER
SERVICE–RATED

SURFACE MOUNTED
NEMA 1 ENCLOSURE

CKT	LOAD DESCRIPTION		BREAKER POLE	BREAKER AMP	LOAD KVA		BREAKER AMP	BREAKER POLE	LOAD DESCRIPTION		CKT
1	↑		↑	↑			↑	↑	↑		2
3	EXISTING PANEL "P1"		3	225	--	--	225	3	"EP" VIA TRANSFER SWITCH		4
5	↓		↓	↓			↓	↓	↓		6
7	(EXISTING SPACE)	↑	(1) ↓	↓			↓	(1) ↓	(EXISTING SPACE)	↑	8
9	(EXISTING SPACE)	ODHP–1	(1) 3	45①	8.06	23.92	100①	(1) 3	(EXISTING SPACE)	NEW PANEL 'P2'	10
11	(EXISTING SPACE)	↓	(1) ↓	↓			↓	(1) ↓	(EXISTING SPACE)	↓	12
13	↑		↓	↓			↓	↓	↑		14
15	EXISTING ODHP–1		3	30	--	--	50②	3	EXISTING IDHP–1	SPARE	16
17	↓		↓	↓			↓	↓	↓	↓	18
19			↓	↓			↓	↓	↓		20
21	EXISTING ODHP–2		3	40	--	--	30	3	EXISTING SURGE PROTECTIVE DEVICE		22
23	↓		↓	↓			↓	↓	↓		24
25			↓	↓			↓	↓	↓		26
27	EXISTING IDHP–2		3	100	--	--	20	3	EXISTING ODHP–1		28
29	↓		↓	↓			↓	↓	↓		30
31	(EXISTING SPACE)	↑	(1) ↓	↓			--	1	EXISTING SPACE		32
33	(EXISTING SPACE)	ODHP–3	(1) 3	60①	10.08	--	60	2	EXISTING SPARE/LIFT STATION		34
35	(EXISTING SPACE)	↓	(1) ↓	↓			↓	↓	↓		36
37	(EXISTING SPACE)	IDHP–3	(1) 2	60①	8.65	8.65	60①	(1) 2	(EXISTING SPACE)	IDHP–1	38
39	(EXISTING SPACE)	↓	(1) ↓	↓			↓	(1) ↓	(EXISTING SPACE)	↓	40
41	EXISTING SPACE		1	--			--	1	EXISTING SPACE		42

① EC TO FURNISH NEW HACR RATED BREAKER; VERIFY SIZE REQUIRED FOR EQUIPMENT FURNISHED
② EC TO RELABEL EXISTING BREAKER AS 'SPARE'
③ FURNISH NEW BREAKER

TOTAL CONNECTED LOAD: XX.X KVA
MINIMUM INTERRUPTING CAPACITY: AIC TO MATCH EXISTING

CIRCUIT BREAKER PANEL SCHEDULE
EXISTING PANEL 'EP'

120/208 VOLT 3ø 4W
225 AMP MAIN BREAKER

SURFACE MOUNTED
NEMA 1 ENCLOSURE

CKT	LOAD DESCRIPTION	BREAKER POLE	BREAKER AMP	LOAD KVA		BREAKER AMP	BREAKER POLE	LOAD DESCRIPTION	CKT
1	EXISTING LTG SERVER 106	1	20	--	--	30	2	EXISTING RCPT. SERVER 106	2
3	EXISTING RCPT. SERVER 106	1	20	--		↓	↓	↓	4
5	EXISTING RCPT. SERVER 106	1	20	--	--	30	2	EXISTING RCPT. SERVER 106	6
7	EXISTING RCPT. SERVER 106	1	20	--		↓	↓	↓	8
9	EXISTING RCPT. SERVER 106	1	20	--	--	50	2	EXISTING U.P.S	10
11	EXISTING RCPT. SERVER 106	1	20	--		↓	↓	↓	12
13	EXISTING RCPT. DISASTER RECOV. 107	1	20	--	--	30	2	EXISTING SPARE	14
15	EXISTING RCPT. DISASTER RECOV. 107	1	20	--		↓	↓	↓	16
17	EXISTING RCPT. DISASTER RECOV. 107	1	20	--	--	20	2	EXISTING FLOOR BOX RCPT.	18
19	EXISTING RCPT. DISASTER RECOV. 107	1	20	--		↓	↓	↓	20
21	EXISTING RCPT. TELLER LINE	1	20	--	--	20	1	EXISTING ATM POWER	22
23	EXISTING RCPT. TELLER LINE	1	20	--		↓	↓	↓	24
25	EXISTING RCPT. TELLER LINE	1	20	--	--	20	1	EXISTING LIGHTS LOBBY	26
27	EXISTING RCPT. COM. RM.	1	20	--		↓	↓	↓	28
29	EXISTING RCPT. COM. RM.	1	20	--	--	20	1	EXISTING FIRE PROTECTION FM 200	30
31	EXISTING RCPT. COM. RM.	1	20	--	--	20	1	EXISTING CRCU–1	32
33	EXISTING RCPT. DRIVER THRU TELLER	1	20	--	--	20	1	EXISTING CRCU–1	34
35	EXISTING RCPT. DRIVER THRU TELLER	1	20	--		--	1	EXISTING SPACE	36
37	EXISTING RCPT. DRIVER THRU TELLER	1	20	--		--	1	EXISTING SPACE	38
39	EXISTING RCPT. DRIVER THRU TELLER	1	20	--		--	1	EXISTING SPACE	40
41	EXISTING RCPT. DRIVER THRU TELLER	1	20	--		--	1	EXISTING SPACE	42

TOTAL CONNECTED LOAD: XX.XX KVA
MINIMUM INTERRUPTING CAPACITY: AIC TO MATCH EXISTING

CIRCUIT BREAKER PANEL SCHEDULE
EXISTING PANEL 'PI' SECTION I & 2

120/208 VOLT 3ø 4W
225 AMP MAIN LUG ONLY

SURFACE MOUNTED
NEMA 1 ENCLOSURE

CKT	LOAD DESCRIPTION	BREAKER POLE	BREAKER AMP	LOAD KVA		BREAKER AMP	BREAKER POLE	LOAD DESCRIPTION	CKT
1	EXISTING SPARE	1	20	--	--	20	1	EXISTING SPARE	2
3	EXISTING SPARE	1	20	--	--	20	1	EXISTING SPARE	4
5	EXISTING LIGHTS WORK BREAK OFFICES	1	20	--	--	20	1	EXISTING SPARE	6
7	EXISTING SMOKE DAMPERS	1	20	--	--	20	1	EXISTING SPARE	8
9	EXISTING LIGHTS SOFFET	1	20	--	--	20	1	EXISTING SPARE	10
11	EXISTING LIGHTS TELLER LINE	1	20	--	--	20	1	EXISTING SPARE	12
13	EXISTING SPARE	1	20	--	--	20	1	EXISTING FLAG POLE LTS	14
15	EXISTING LIGHTS DRIVE THRU	1	20	--	--	20	1	EXISTING ROAD SIGN/TIME CLOCK	16
17	EXISTING SPARE	1	20	--	--	20	2	EXISTING POLE LTS	18
19	EXISTING LIGHTS OPEN OFFICE	1	20	--		↓	↓		20
21	EXISTING SPARE	1	20	--	--	20	2	EXISTING POLE LTS	22
23	EXISTING SPARE	1	20	--		↓	↓		24
25	EXISTING RECEPT. TELLER AREA	1	20	--	--	20	2	EXISTING SPARE/MINI SPLIT	26
27	EXISTING SPARE	1	20	--		↓	↓		28
29	EXISTING SPARE	1	20	--	--	30	1	EXISTING SPARE	30
31	EXISTING SPARE	1	20	--	--	20	1	EXISTING SPARE	32
33	EXISTING SPARE	1	20	--	--	30	1	EXISTING SPARE	34
35	EXISTING SPARE	1	20	--	--	30	1	EXISTING SPARE	36
37	↑	1	↑		--	20	1	EXISTING SPARE	38
39	EXISTING SPARE	3	30	--	--	20	1	EXISTING RCPT BLOWER	40
41	↓	1	↓		--	20	1	EXISTING RCPT BLOWER	42
43	EXISTING RCPT. OFFICE	1	20	--	--	20	1	EXISTING RCPT. WORK ROOM	44
45	EXISTING RCPT. OFFICE	1	20	--	--	20	1	EXISTING RCPT. LOBBY	46
47	EXISTING RCPT. OFFICE	1	20	--	--	20	1	EXISTING RCPT. WORK ROOM	48
49	EXISTING RCPT. OPEN OFFICE	1	20	--	--	20	1	EXISTING RCPT. WORK ROOM	50
51	EXISTING RCPT. OPEN OFFICE	1	20	--	--	20	1	EXISTING RCPT. BREAK ROOM	52
53	EXISTING SPARE	1	20	--	--	20	1	EXISTING RCPT. COPIER	54
55	EXISTING RCPT. OPEN OFFICE	1	20	--	--	20	1	EXISTING SPARE/ MINI SPLIT	56
57	EXISTING RCPT. LOBBY	1	20	--	--	20	1	EXISTING SPARE/ MINI SPLIT	58
59	EXISTING RCPT. LOBBY	1	20	--	--	20	1	EXISTING SPARE	60
61	EXISTING RCPT. OFFICE WORK	1	20	--	--	20	1	EXISTING SPARE	62
63	EXISTING RCPT. WORK, ELEC. RESTROOM	1	20	--	--	20	1	EXISTING SPARE	64
65	EXISTING SPARE	1	20	--	--	20	1	EXISTING SPARE	66
67	EXISTING RECPT. WORK ROOM	1	20	--	--	20	1	EXISTING SPARE	68
69	EXISTING RCPT. APPLIANCE	1	20	--	--	20	1	EXISTING GEN. BATTERY/BLK.HEATER	70
71	EXISTING RCPT. APPLIANCE	1	20	--	--	20	1	EXISTING SPARE	72
73	EXISTING RCPT. REFRIGERATOR	1	20	--	--	20	1	EXISTING L&G BID	74
75	EXISTING SIGN LIGHT	1	20	--	--	20	1	EXISTING SPARE	76
77	EXISTING WATER COOLER	1	20	--	--	20	1	EXISTING SPARE	78
79	EXISTING MARQUIS	1	30	--	--	30	1	EXISTING SPARE	80
81	EXISTING MARQUIS	1	30	--	--	30	1	EXISTING SPARE	82
83	EXISTING SPARE	1	20	--	--	20	1	EXISTING WATER HEATER OUTSIDE RCPT. DRIVE THRU	84

TOTAL CONNECTED LOAD: XX.XX KVA
MINIMUM INTERRUPTING CAPACITY: AIC TO MATCH EXISTING

CIRCUIT BREAKER PANEL SCHEDULE
PANEL 'P2'

120/208 VOLT 3ø 4W
100 AMP MAIN LUG ONLY

SURFACE MOUNTED
NEMA 1 ENCLOSURE

CKT	LOAD DESCRIPTION	BREAKER POLE	BREAKER AMP	LOAD KVA		BREAKER AMP	BREAKER POLE	LOAD DESCRIPTION	CKT
1	REC–PHARMACY STORAGE 133	1	20	1.08	1.44	20	1	REC–OFFICE 129/DENTAL SUPPLIES CLOSET 128A	2
3	MODEL TRIMMER #41	1	20	1.2	0.24	20	1	ULTRASONIC CLEANER #52	4
5	LAB CABINETS #31	1	20	0.5	0.72	20	1	REC–DENTAL LAB 128/TREATMENT 3	6
7	REC–PHARMACY DRIVE–THRU WINDOW	1	20	0.18	1.08	20	1	REC–TREATMENT 1/2, RSTRM	8
9	COMPRESSOR	2	20①	2.37	0.36	20	1	REC–CORRIDOR 125 (COMPUTER)	10
11	↓	↓	↓		0.54	20	1	REC–TREATMENT 4	12
13	HANDPIECE STA #50	1	20	0.24	0.50	20②	1	TREATMENT 1 & 2–INTRAORAL X–RAY	14
15	STERILIZATION CABINET #22	1	20	0.5	0.54	20	1	REC–TREATMENT 3 (DENTAL CHAIR & REAR CAB.)	16
17	STERILIZER	1	20	1.44	0.54	20	1	REC–TREATMENT 4 (DENTAL CHAIR & REAR CAB.)	18
19	STERILIZATION CABINET CLEAN #22A	1	20	0.5	0.54	20	1	REC–TREATMENT 1 (DENTAL CHAIR & REAR CAB.)	20
21	DRY VACUUM SYSTEM #61	2	20①	2.37	0.54	20	1	REC–TREATMENT 2 (DENTAL CHAIR & REAR CAB.)	22
23	↓	↓	↓		0.50	20②	1	TREATMENT 3 & 4–INTRAORAL X–RAY	24
25	DIGITAL PANO	2	20①	0.5	0.48	20③	1	EWC	26
27	↓	↓	↓		0.36	20	1	REC–LOBBY	28
29	PANEL	1	20	0.5	0.36	20	1	REC–LOBBY	30
31	SPARE	1	20	--	0.90	20	1	REC–PHARMACY DRIVE–THRU 133A	32
33	SPARE	1	20	--	0.54	20	1	REC–PHARMACY DRIVE–THRU 133A	34
35	SPARE	1	20	--	0.38	20	1	REC–PHARMACY DRIVE–THRU 133A (REFRIGERATOR)	36
37	SPARE	1	20	--	0.9	20	1	REC–PHARMACY STORAGE 133 (COMPUTER)	38
39	SPARE	1	20	--	0.54	20	1	REC–Rx RETAIL 132	40
41	SPARE	1	20	--	0.54	20	1	REC–Rx RETAIL 132	42

① HACR RATED BREAKER; VERIFY SIZE REQUIRED FOR EQUIPMENT FURNISHED
② FURNISH BREAKER W/ HANDLE 'LOCK–OFF'
③ FURNISH GFCI BREAKER

TOTAL CONNECTED LOAD: 23.92 KVA
MINIMUM INTERRUPTING CAPACITY: 10,000 AMPS SYMMETRICAL

FOR REVIEW ONLY
NOT FOR BIDDING OR CONSTRUCTION
BLUEINC.COM

© 2021 DAG ARCHITECTS, INC. ALL RIGHTS RESERVED. NO PART OF THIS DOCUMENT MAY BE COPIED, REPRODUCED OR TRANSMITTED BY ANY MEANS WITHOUT WRITTEN PERMISSION OF DAG ARCHITECTS, INC. THESE DRAWINGS AND SPECIFICATIONS ARE THE PROPERTY AND COPYRIGHT OF DAG ARCHITECTS, INC. AND SHALL NOT BE USED ON ANY OTHER PROJECT OR LOCATION EXCEPT AS DESCRIBED ON THE DRAWINGS, WITHOUT THE PRIOR WRITTEN AGREEMENT OF DAG ARCHITECTS.

DAG ARCHITECTS
DAG Architects AR0009694
455 Harrison Ave Suite.1 Panama City, FL 32401
850.387.1671
www.DAGarchitects.com

BID DOCUMENTS

PANCARE OF FLORIDA, INC.
RENOVATIONS & NEW CONSTRUCTION FOR PANCARE CHIPLEY
1440 MAIN ST, CHIPLEY, FL 32428

PANCARE OF FLORIDA, INC.

REVISIONS:

No.	Description	Date

WATFORD ENGINEERING
4452 Clinton Street Marianna, Florida 32446
311 N. College St. Office 101B Auburn, AL 36830
Florida CA Number: 27825
Anthony L Davis, PE
Florida License Number: 57419
850.526.3447
Project Number: 2023-091
Checked By: ALD
Drawn By: KEF

PANEL SCHEDULES

PROJECT NUMBER	23071
DATED	02/05/2024

E002

23071
PRELIMINARY REVIEW SET
08/01/2023

© 2021 DAG ARCHITECTS, INC. ALL RIGHTS RESERVED NO PART OF THIS DOCUMENT MAY BE COPIED, REPRODUCED OR TRANSMITTED BY ANY MEANS WITHOUT WRITTEN PERMISSION OF DAG ARCHITECTS, INC. THESE DRAWINGS AND SPECIFICATIONS ARE THE PROPERTY AND COPYRIGHT OF DAG ARCHITECTS, INC. AND SHALL NOT BE USED ON ANY OTHER PROJECT OR LOCATION EXCEPT AS DESCRIBED ON THE DRAWINGS, WITHOUT THE PRIOR WRITTEN AGREEMENT OF DAG ARCHITECTS.

KEYNOTES:

1. EXISTING SURGE PROTECTOR.
2. EXISTING FEEDER TO REMAIN.
3. EXISTING KOHLER POWER SYSTEMS TRANSFER SWITCH.
4. INSTALL 4#3, 1#8GND IN 1-1/2"C.
5. INSTALL 4#4/0, 1#4GND IN 2-1/2"C.
6. FIELD-VERIFY IF EXISTING FEEDER FOR PANEL 'EP' IS CURRENTLY FED UNDERGROUND. IF EXISTING FEEDER IS FED UNDERGROUND, REMOVE FEEDER AND INSTALL NEW FEEDER AS SHOWN FROM TRANSFER SWITCH TO NEW LOCATION OF PANEL 'EP'.
7. EXISTING UG SECONDARY SERVICE TO REMAIN.

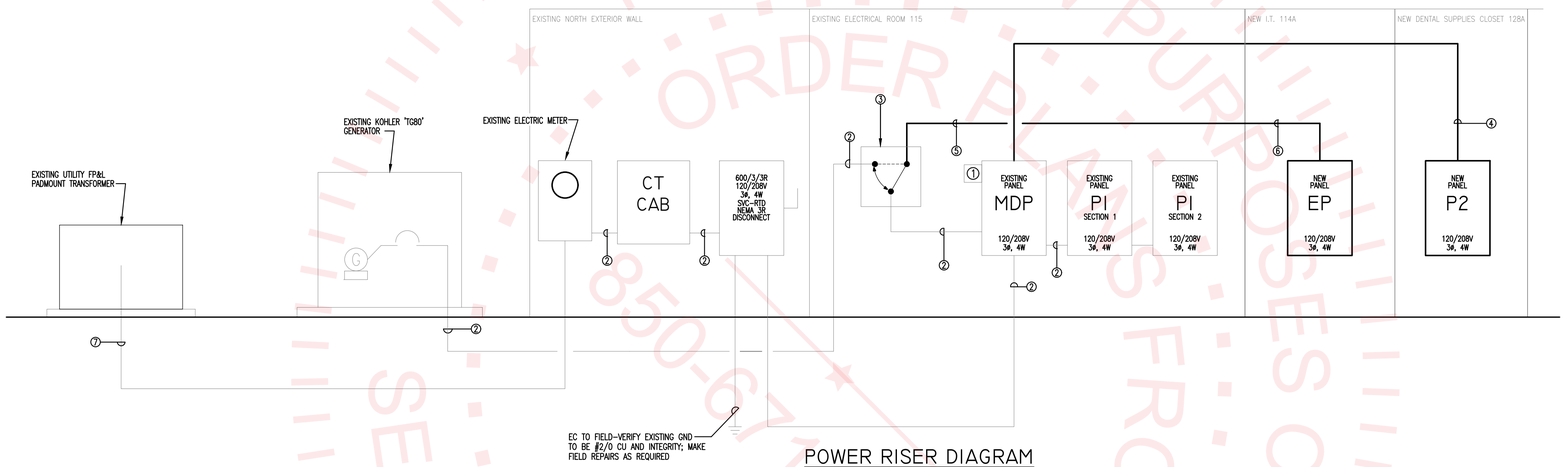

POWER RISER DIAGRAM
N.T.S.

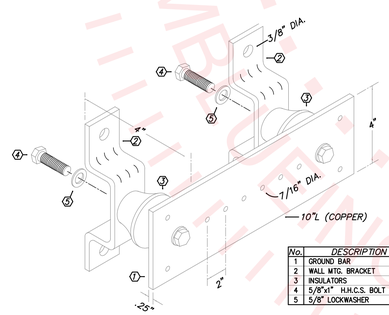

No.	DESCRIPTION
1	GROUND BAR
2	WALL MTG. BRACKET
3	INSULATORS
4	5/8"x1" H.H.C.S. BOLT
5	5/8" LOCKWASHER

INSULATED GROUNDING BUSBAR DETAIL
NOT TO SCALE

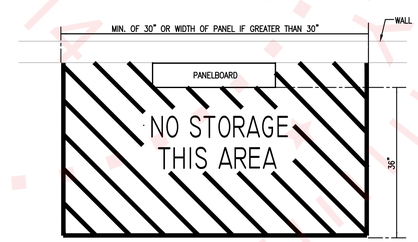

TYPICAL CLEARANCE AT ELECTRICAL PANELS
NOT TO SCALE

GROUND BAR NOTES:

1. INSTALL ONE BAR AT EACH COMMUNICATIONS BACKBOARD.
2. ROUTE 1#2 BARE CU IN 1"C. TO ELECTRICAL SERVICE GND FROM BAR ON MAIN COMM. BACKBOARD.
3. CONNECT BARS WITH 1#6 BARE CU IN 1"C.

REVIEW PURPOSES ONLY
ORDER PLANS FROM
850-674-2714
SEMBACHER.COM

WATFORD ENGINEERING
4452 Clinton Street Marianna, Florida 32446
311 N. College St. Office 101B Auburn, AL 36830
Florida CA Number: 27825
Anthony L Davis, PE
Florida License Number: 57419
850.526.3447
Project Number: 2023-091
Checked By: ALD
Drawn By: KEF

DAG ARCHITECTS
DAG Architects AR0009694
455 Harrison Ave Suite I Panama City, FL 32401
850.387.1671
www.DAGarchitects.com

BID DOCUMENTS

PANCARE OF FLORIDA, INC.
RENOVATIONS & NEW CONSTRUCTION FOR PANCARE CHIPLEY
1440 MAIN ST, CHIPLEY, FL 32428

PANCARE OF FLORIDA, INC.

REVISIONS:

No.	Description	Date

POWER RISER

PROJECT NUMBER	23071
DATED	02/05/2024

E003

23071
PRELIMINARY REVIEW SET
09/01/2023

GENERAL NOTE(S) FOR ELECTRICAL CONTRACTOR:

-PRIOR TO CONSTRUCTION, ELECTRICAL CONTRACTOR SHALL COORDINATE WITH OWNER-SELECTED SECURITY AND A/V CONTRACTORS FOR REQUIRED RACEWAYS/BACKBOXES/JUNCTION BOXES, ETC...
-PRIOR TO CONSTRUCTION, ELECTRICAL CONTRACTOR SHALL COORDINATE WITH DENTAL EQUIPMENT VENDOR/DRAWINGS ALL REQUIRED REQUIRED RACEWAYS, JUNCTIONS BOXES, AND POWER/LV CONTROL FOR VENDOR FURNISHED DENTAL EQUIPMENT. PRIOR TO BID, ELECTRICAL CONTRACTOR SHALL ACQUIRE A COMPLETE SET OF DENTAL EQUIPMENT DRAWINGS FROM GC/ARCHITECT FOR COORDINATION AND DETAILS.
NOT ALL RACEWAYS, J-BOXES, CONTROL WIRING, ETC... REQUIRED FOR DENTAL EQUIPMENT.
-REDUNDANT GROUNDING SHALL BE PROVIDED IN ALL PATIENT CARE AREAS AND EXAM ROOMS. REFER TO NEC 517.13 FOR ALL LOCATIONS REQUIRED AND ACCEPTABLE METHODS OF GROUNDING. 'MC' CABLE MAY BE USED IN APPLICABLE AREAS PER APPROVAL. IN EXISTING AREAS THAT REQUIRE REDUNDANT GROUNDING, EC SHALL PROVIDE REDUNANT GROUNDING WHERE REQUIRED PER NEC.

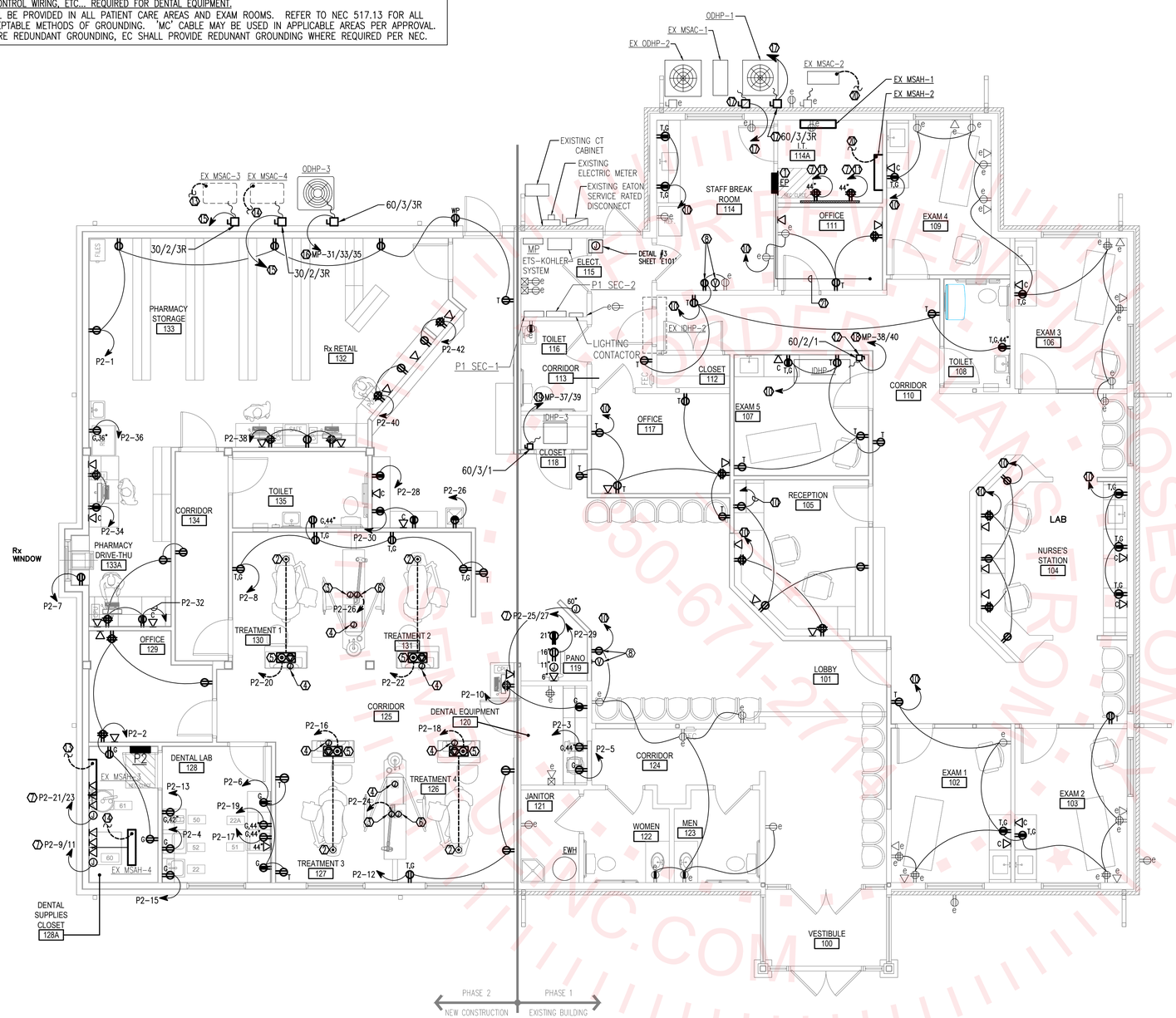

1 / E100 POWER PLAN - NEW WORK
SCALE: 3/16" = 1'-0"

KEYNOTES:

1. EXISTING PANEL TO BE REUSED.
2. INSTALL GFCI QUADRAPLEX RECEPTACLE FLUSH IN FLOOR FOR UTILITIES AND MOTORIZED EXAM CHAIR. FURNISH BRASS COVERPLATE AND ALL ACCESSORIES FOR A COMPLETE INSTALLATION. SEE SHEET 'DB110' FOR DETAILS.
3. INSTALL 1-GANG JUNCTION BOX IN FLOOR FOR CONSOLE-MOUNTED INTRAORAL X-RAY EQUIPMENT. FURNISH COVERPLATE AND ALL ACCESSORIES FOR A COMPLETE INSTALLATION. PRIOR TO ROUGH-IN, VERIFY THAT EQUIPMENT IS TO BE INSTALLED AND COORDINATE EXACT LOCATION AND BOX.
4. INSTALL 1-GANG JUNCTION BOX IN FLOOR FOR CONSOLE EQUIPMENT. PRIOR TO ROUGH-IN, FIELD-VERIFY EXACT LOCATION WITH GC/OWNER. SEE SHEET 'DB110' FOR DETAILS. EC SHALL INSTALL ONE (1) 1"C (W/PULLSTRING) FOR TELE/DATA CABLING. CONDUIT TO BE TERMINATED IN ACCESSIBLE LOCATION ABOVE CEILING.
5. EC SHALL INSTALL 2-GANG FLOOR BOX WITH TELE/DATA & DUPLEX RECEPTACLE; FURNISH WITH BRASS COPPERPLATE AND ALL ACCESSORIES FOR A COMPLETE INSTALLATION. PRIOR TO ROUGH-IN, VERIFY LOCATION WITH GC. SEE SHEET 'DB110' FOR DETAILS.
6. INSTALL FLOOR BOX PER DENTAL DRAWING REQUIREMENTS. REFER TO DENTAL DRAWINGS FOR ALL REQUIREMETNS FOR A COMPLETE INSTALLATION. PRIOR TO ROUGH-IN, VERIFY EXACT LOCATION WITH GC/OWNER.
7. EC SHALL INSTALL 2#10, 1#10GND IN 3/4" CONDUIT.
8. PRIOR TO ROUGH-IN, EC TO FIELD-VERIFY EXACT LOCATION/HEIGHT OF DEVICES FOR TV WITH GC/AV CONTRACTOR.
9. INSTALL 2-GANG JUNCTION BOX IN FLOOR FOR CONSOLE EQUIPMENT. FURNISH COVERPLATE AND ALL ACCESSORIES FOR A COMPLETE INSTALLATION. PRIOR TO ROUGH-IN, COORDINATE EXACT LOCATION AND BOX REQUIRED IN FIELD WITH DENTAL EQUIPMENT SUPPLIER/GC. COORDINATE REQUIRED CUT-N-PATCH OF EXISTING FLOOR WITH GC PRIOR TO CONSTRUCTION.
10. DURING DEMOLITION PHASE, EC TO IDENTIFY WHICH BREAKERS ARE TO HAVE NO LOAD REMAINING. CONNECT NEW HOMERUN TO 20/1 BREAKER IN IN PANEL 'P1' SECTION 1 OR SECTION 2. IF NO BREAKER IS AVAILABLE, INSTALL 20/1 BREAKER IN PANEL 'P1' SECTION 1 OR SECTION 2 AND CONNECT HOMERUN TO IT.
11. DURING DEMOLITION PHASE, EC TO IDENTIFY WHICH BREAKERS ARE TO HAVE NO LOAD REMAINING. CONNECT NEW HOMERUN TO 20/1 BREAKER IN IN PANEL 'EP'. IF NO BREAKER IS AVAILABLE, INSTALL 20/1 BREAKER IN PANEL 'EP' AND CONNECT HOMERUN TO IT.
12. COORDINATE WITH GC FOR EXACT MOUNTING LOCATION ABOVE CEILING FOR AIR HANDLING UNIT DISCONNECT.
13. EX MSAH-3 IS POWERED BY EX MSAC-3. EC TO INSTALL 2#12, 1#12GND IN 3/4"C BETWEEN INDOOR AND OUTDOOR UNIT.
14. EX MSAH-4 IS POWERED BY EX MSAC-4. EC TO INSTALL 2#12, 1#12GND IN 3/4"C BETWEEN INDOOR AND OUTDOOR UNIT.
15. PER MECHANICAL DESIGN, EXISTING MINI-SPLIT TO BE RELOCATED WHERE SHOWN. EC TO FIELD-VERIFY EXACT BREAKER SERVING MECHANICAL UNIT AND REMOVE CIRCUIT BACK PANEL SERVING UNIT. EC TO INSTALL 2#12, 1#12GND IN 3/4" CONDUIT TO NEW 30/2/3R DISCONNECT FOR RECONNECTION TO EXISTING MINI-SPLIT IN NEW LOCATION.
16. EC SHALL INSTALL 3#6, 1#8GND IN 1" CONDUIT.
17. EXISTING MECHANICAL UNIT IS PROTECTED BY 30/3 BREAKER IN EXISTING PANEL 'MP' SPACES 13/15/17. EC TO FURNISH/INSTALL NEW 45/3 HACR BREAKER IN SPACED 7/9/11 AND CONNECT TO NEW 3#8,1#10GND IN 3/4"C CIRCUIT FOR NEW 'ODHP-1'. THE EXISTING 30/3 BREAKER AND CIRCUIT TO BE CONNECTED TO EXISTING 'MSAC-1' VIA NEW 30/2/3R (FUSED 20A) DISCONNECT.
18. PER MECHANICAL DESIGN, EXISTING MECHANICAL UNIT 'IDHP-1' TO BE REMOVED AND REPLACED BY OTHERS. EC TO REMOVE EXISTING CIRCUIT BACK TO PANEL SERVING UNIT AND RELABEL EXISTING BREAKER AS 'SPARE'. EC TO INSTALL 2#6, 1#10GND IN 1" CONDUIT AND NEW 60/2 HACR BREAKER IN EXISTING PANEL 'MP' FOR NEW MECHANICAL UNIT'IDHP-1'.
19. EC SHALL INSTALL 2#6, 1#10GND IN 1" CONDUIT.
20. PER MECHANICAL DESIGN, EX MSAH-2 TO BE RELOCATED BY OTHERS WHERE SHOWN. EX MSAH-2 IS POWERED BY EX MSAC-2. EC TO INSTALL 2#12, 1#12GND IN 3/4"C BETWEEN INDOOR AND OUTDOOR UNIT.
21. EC TO FIELD-VERIFY IF EXISTING FEEDER IS INSTALLED OVERHEAD OR UNDERGROUND. IF OVERHEAD, EXISTING FEEDER MAY BE RE-ROUTED TO NEW LOCATION OF PANEL 'EP'. IF UNDERGROUND, INSTALL NEW FEEDER AS SHOWN IN 'POWER RISER DIAGRAM'.

WATFORD ENGINEERING
4452 Clinton Street Marianna, Florida 32446
311 N. College St. Office 101B Auburn, AL 36830
Florida CA Number: 27825
Anthony L Davis, PE
Florida License Number: 57419
850.526.3447
Project Number: 2023-091
Checked By: ALD
Drawn By: KEF

DAG ARCHITECTS
DAG Architects AR0009694
455 Harrison Ave Suite 1 Panama City, FL 32401
850.387.1671
www.DAGarchitects.com

BID DOCUMENTS

PANCARE OF FLORIDA, INC.
RENOVATIONS & NEW CONSTRUCTION FOR PANCARE CHIPLEY
1440 MAIN ST, CHIPLEY, FL 32428

PANCARE OF FLORIDA, INC.

REVISIONS:

No.	Description	Date

POWER PLAN - NEW WORK

PROJECT NUMBER	23071
DATED	02/05/2024

E100

© 2021 DAG ARCHITECTS, INC. ALL RIGHTS RESERVED NO PART OF THIS DOCUMENT MAY BE COPIED, REPRODUCED OR TRANSMITTED BY ANY MEANS WITHOUT WRITTEN PERMISSION OF DAG ARCHITECTS, INC. THESE DRAWINGS AND SPECIFICATIONS ARE THE PROPERTY AND COPYRIGHT OF DAG ARCHITECTS, INC. AND SHALL NOT BE USED ON ANY OTHER PROJECT OR LOCATION EXCEPT AS DESCRIBED ON THE DRAWINGS, WITHOUT THE PRIOR WRITTEN AGREEMENT OF DAG ARCHITECTS.

23071
PRELIMINARY REVIEW SET
09/01/2023

EQUIPMENT POWER & LOW VOLTAGE SCHEDULE

GENERAL NOTES

ALL DEVICES ARE TO BE INSTALLED PER STATE AND LOCAL CODES.

EQUIPMENT INFO				ELECTRICAL INFO									LOW VOLTAGE INFO									
					POWER		CONNECTION TYPE															
QTY	ITEM #	DESCRIPTION	STATUS	EC CONNECTION BY	VOLTS	AMPS	SINGLE OUTLET	DUPLEX OUTLET	QUAD OUTLET	DIRECT WIRE	DEDICATED POWER	J-BOX	ELECTRICAL REMARKS	LV CONNECTION BY	2" EMPTY CONDUIT	3/4" EMPTY CONDUIT	1" EMPTY CONDUIT	1&3 WIRE	1&3 WIRE	J-BOX LV	CAT5e OR BETTER	MFG CABLE	MONITOR CABLE	LV REMARKS
4	1	DENTAL CHAIR	NW	EC	120v	7.0			•					EC	•									
4	19	REAR CABINET	NW	EC	120v	20.0		•					EC TO LEAVE MIN 3' FLEXIBLE CONDUIT	EC	•	•		•			•			RUN LOW VOTLTAGE WIRES AND OR CABLES TO LOCATIONS INDICATED ON PLANS
2	21	CENTRAL CABINET	NW	EC	120v	20.0			•				EC TO LEAVE MIN 3' FLEXIBLE CONDUIT	EC	•									RUN LOW VOTLTAGE WIRES AND OR CABLES TO LOCATIONS INDICATED ON PLANS
1	22	STERILIZATION CABINET	NW	EC	120v	20.0		•		•			EC TO LEAVE MIN 3' FLEXIBLE CONDUIT	EC										RUN LOW VOTLTAGE WIRES AND OR CABLES TO LOCATIONS INDICATED ON PLANS
1	22A	STERILIZATION CABINET CLEAN	NW	EC	120v	20.0		•		•			EC TO LEAVE MIN 3' FLEXIBLE CONDUIT	EC										RUN LOW VOLTAGE WIRES AND OR CABLES TO LOCATIONS INDICATED ON PLANS
2	30	INTRAORAL X-RAY	NW	EC	120	20.0					•	•		EC		•		•		•				
1	31	LAB CABINETS	NW	EC	120v	20.0		•		•			GC PROVIDED CABINET, ALL UTILITY LOCATIONS FOR DENTAL EQUIPMENT TO BE COORDINATED BY GC. VERIFY LOCATIONS WITH CABINET MFG, OWNER, AND PATTERSON EQUIPMENT SPECIALIST.	EC										GC PROVIDED CABINET, ALL UTILITY LOCATIONS FOR DENTAL EQUIPMENT TO BE COORDINATED BY GC. VERIFY LOCATIONS WITH CABINET MFG, OWNER, AND PATTERSON EQUIPMENT SPECIALIST.
1	36	DIGITAL PAN	NW	EC	120v	20.0		•			•			EC		•		•		•	•			
1	41	MODEL TRIMMER	NW	EC	120V	10.0		•																
1	51	STERILIZER	NW	EC	120v	12.0		•			•		DEDICATED POWER	EC										
1	52	ULTRASONIC CLEANER	NW	EC	120v	2.0		•			•			EC										
1	60	COMPRESSOR	NW	EC	220v	20.0		•			•		DEDICATED POWER, IF SERVICE IS ABOVE OR BELOW VOLT AGE INDICATED IN STALL A BUCK/BOOST TRANSFORMER AS REQUIRED. COORDINATE WITH EQUIPMENT SPECIALIST.	EC		•			•					
1	61	DRY VACUUM SYSTEM	NW	EC	208-230v	11.4		•			•		UNIT REQUIRES MIN 20.0 AMP BREAKER. UNIT REQUIRES THERMOSTATICALLY OPERATED EXAUST FAN (CONTINUOUS RUN) @ 800 CFM TO MAINTAIN ROOM TEMPATURE BETWEEN 40 AND 104 DEGREES.	EC		•		•						

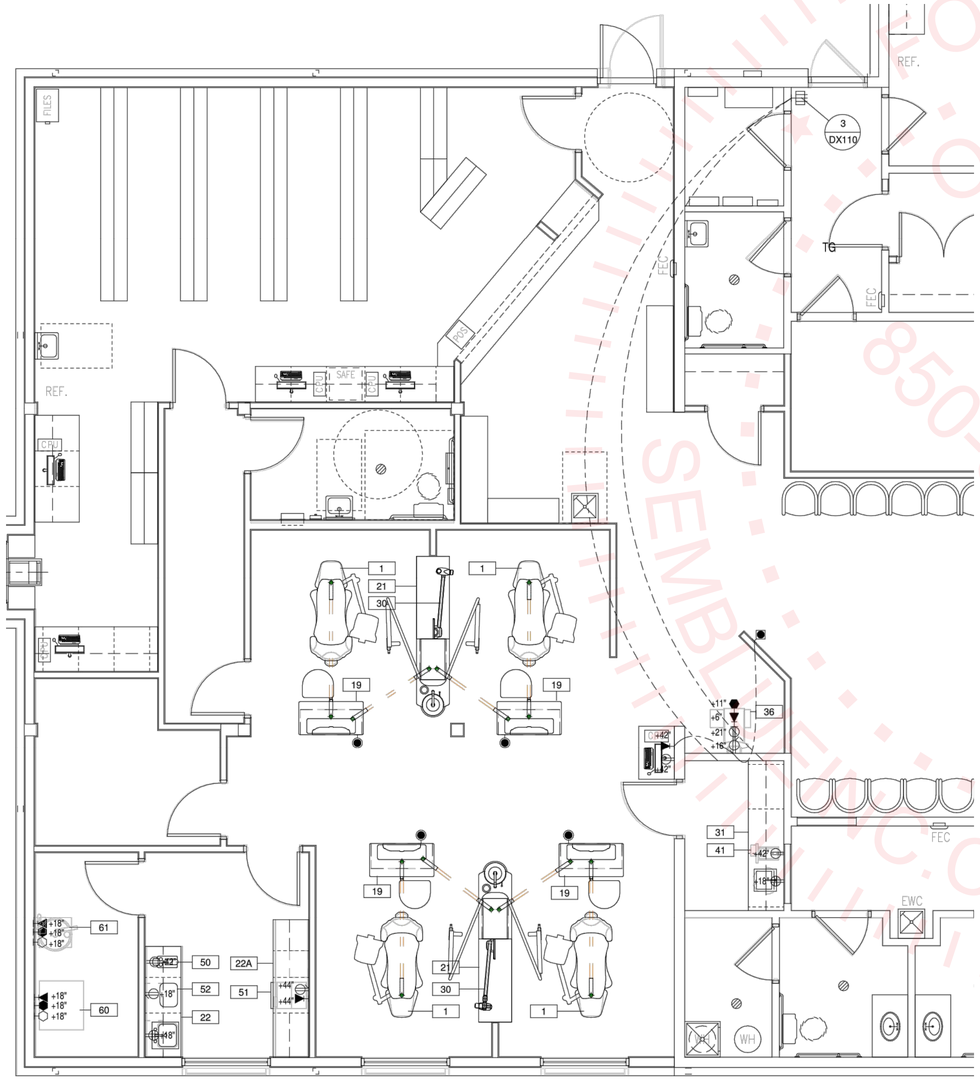

N 1 E101 DENTAL EQUIPMENT PLAN - NEW WORK

SCALE: N.T.S.

ELECTRICAL SYMBOLS

ALL DEVICES SHALL BE INSTALLED PER STATE AND LOCAL CODE.
ALL LOCATIONS SHOULD BE VERIFIED WITH PATTERSON REP OR OWNER PRIOR TO PLACEMENT.

+XX" – INDICATES HEIGHT FROM FINISHED FLOOR TO CENTER OF DEVICE UNLESS OTHERWISE NOTED BELOW, IF ITEM NOT TAGGED HEIGHT IS 18" A.F.F.

QTY.	SYM.	DESCRIPTION	PDSI_Vent And Exhaust Remarks	PDSI_Exhaust Comments
3		120v DUPLEX DEDICATED OUTLET WALL, IF TAG NOT PRESENT HEIGHT IS 18" A.F.F. TO CENTER OF DEVICE		
3		120v FLUSH DUPLEX OUTLET WALL, IF TAG NOT PRESENT HEIGHT IS 18" A.F.F. TO CENTER OF DEVICE		
2		120v QUAD OUTLET WALL, IF TAG NOT PRESENT HEIGHT IS 18" A.F.F. TO CENTER OF DEVICE		
1		220v SINGLE OUTLET WALL, IF TAG NOT PRESENT HEIGHT IS 18" A.F.F. TO CENTER OF DEVICE		
2		J-BOX WALL, IF TAG NOT PRESENT HEIGHT IS 18" A.F.F.		

LOW VOLTAGE SYMBOLS

ALL DEVICES SHALL BE INSTALLED PER STATE AND LOCAL CODE. ALL LOCATIONS SHOULD BE VERIFIED WITH PATTERSON REP OR OWNER PRIOR TO PLACEMENT.

+XX" - INDICATES HEIGHT FROM FINISHED FLOOR TO CENTER OF DEVICE UNLESS OTHERWISE NOTED BELOW, IF ITEM NOT TAGGED HEIGHT IS 18" A.F.F.

QTY.	SYM.	DESCRIPTION
1		DATA DEVICE WALL MOUNTED
4		DATA DEVICE WALL, IF TAG NOT PRESENT HEIGHT IS 18" A.F.F.
3		J-BOX WALL,LOW VOLTAGE, IF TAG NOT PRESENT HEIGHT IS 18" A.F.F
1		MASTER SWITCH WALL, IF TAG NOT PRESENT HEIGHT IS 60" A.F.F. TO CENTER
1		REMOTE PAN SWITCH IN WALL, IF TAG NOT PRESENT HEIGHT IS 60" A.F.F.
4		REMOTE X-RAY SWITCH IN CABINET, IF TAG NOT PRESENT HEIGHT IS 60" A.F.F.

ELECTRICAL LEGEND

	18/3 WIRE, CABLE RUN IN WALLS OR ABOVE FINISHED CEILING
	18/4 WIRE, WIRES RUN IN WALLS OR ABOVE FINISHED CEILING
	CAT5e OR BETTER CABLE, CABLE RUN IN WALLS OR ABOVE FINISHED CEILING
	MANUFACTURER CABLE, CABLE RUN IN WALLS OR ABOVE FINISHED CEILING
	ELECTRICAL CONDUIT UNDER FLOOR, SIZE AS INDICATED ON PLAN
	ELECTRICAL CONDUIT ABOVE CEILING, SIZE AS INDICATED ON PLAN

GENERAL NOTE(S) FOR ELECTRICAL CONTRACTOR:

–THIS SHEET IS SUPPLEMENTAL TO 'E–100' TO DENOTE ADD'L CLARIFICATION OF DENTAL VENDOR REQUIREMENTS. A COMPLETE SET OF DENTAL DRAWINGS (W/ DETAILS) WAS UNAVAILABLE DURING DESIGN.
REQUIRED RACEWAYS/BACKBOXES/JUNCTION BOXES, ETC...

–PRIOR TO CONSTRUCTION, ELECTRICAL CONTRACTOR SHALL COORDINATE WITH DENTAL EQUIPMENT VENDOR/DRAWINGS ALL REQUIRED REQUIRED RACEWAYS, JUNCTIONS BOXES, AND POWER/LV CONTROL FOR VENDOR FURNISHED DENTAL EQUIPMENT. PRIOR TO BID, ELECTRICAL CONTRACTOR SHALL ACQUIRE A COMPLETE SET OF DENTAL EQUIPMENT DRAWINGS FROM GC/ARCHITECT FOR COORDINATION AND DETAILS. NOT ALL RACEWAYS, J–BOXES, CONTROL WIRING, ETC... REQUIRED FOR DENTAL EQUIPMENT.

–REDUNDANT GROUNDING SHALL BE PROVIDED IN ALL PATIENT CARE AREAS AND EXAM ROOMS. REFER TO NEC 517.13 FOR ALL LOCATIONS REQUIRED AND ACCEPTABLE METHODS OF GROUNDING. 'MC' CABLE MAY BE USED IN APPLICABLE AREAS PER APPROVAL. IN EXISTING AREAS THAT REQUIRE REDUNDANT GROUNDING, EC SHALL PROVIDE REDUNANT GROUNDING WHERE REQUIRED PER NEC.

FOR REVIEW PURPOSES ONLY
ORDER BY SEMBLE INC. 850-671-2714

WATFORD ENGINEERING
4462 Clinton Street Marianna, Florida 32446
311 N. College St. Office 101B Auburn, AL 36830
Florida CA Number: 27825
Anthony L Davis, PE
Florida License Number: 57419
850.526.3447
Project Number: 2023-091
Checked By: ALD
Drawn By: KEF

© 2021 DAG ARCHITECTS, INC. ALL RIGHTS RESERVED. NO PART OF THIS DOCUMENT MAY BE COPIED, REPRODUCED OR TRANSMITTED BY ANY MEANS WITHOUT WRITTEN PERMISSION OF DAG ARCHITECTS, INC. THESE DRAWINGS AND SPECIFICATIONS ARE THE PROPERTY AND COPYRIGHT OF DAG ARCHITECTS, INC. AND SHALL NOT BE USED ON ANY OTHER PROJECT OR LOCATION EXCEPT AS DESCRIBED ON THE DRAWINGS, WITHOUT THE PRIOR WRITTEN AGREEMENT OF DAG ARCHITECTS.

DAG ARCHITECTS
DAG Architects AR0009694
455 Harrison Ave Suite 1 Panama City, FL 32401
850.387.1671
www.DAGarchitects.com

BID DOCUMENTS

PANCARE OF FLORIDA, INC.
RENOVATIONS & NEW CONSTRUCTION FOR PANCARE CHIPLEY
1440 MAIN ST, CHIPLEY, FL 32428

PANCARE OF FLORIDA, INC.

REVISIONS:

No.	Description	Date

DENTAL PLAN & DETAILS - NEW WORK

PROJECT NUMBER	23071
DATED	02/05/2024

E101

23071
PRELIMINARY REVIEW SET
08/01/2023

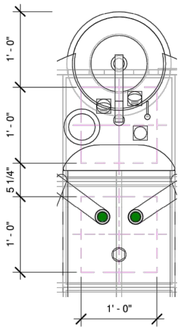

4 ENLARGED CENTRAL CABINET UTILITY ITEM #21
1" = 1'-0"

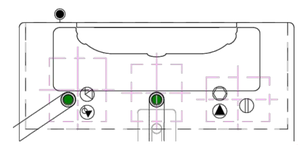

3 ENLARGED REAR TREATMENT UTILITY ITEM #19
1" = 1'-0"

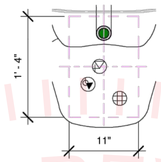

2 ENLARGED CHAIR UTILITY ITEM #1
1" = 1'-0"

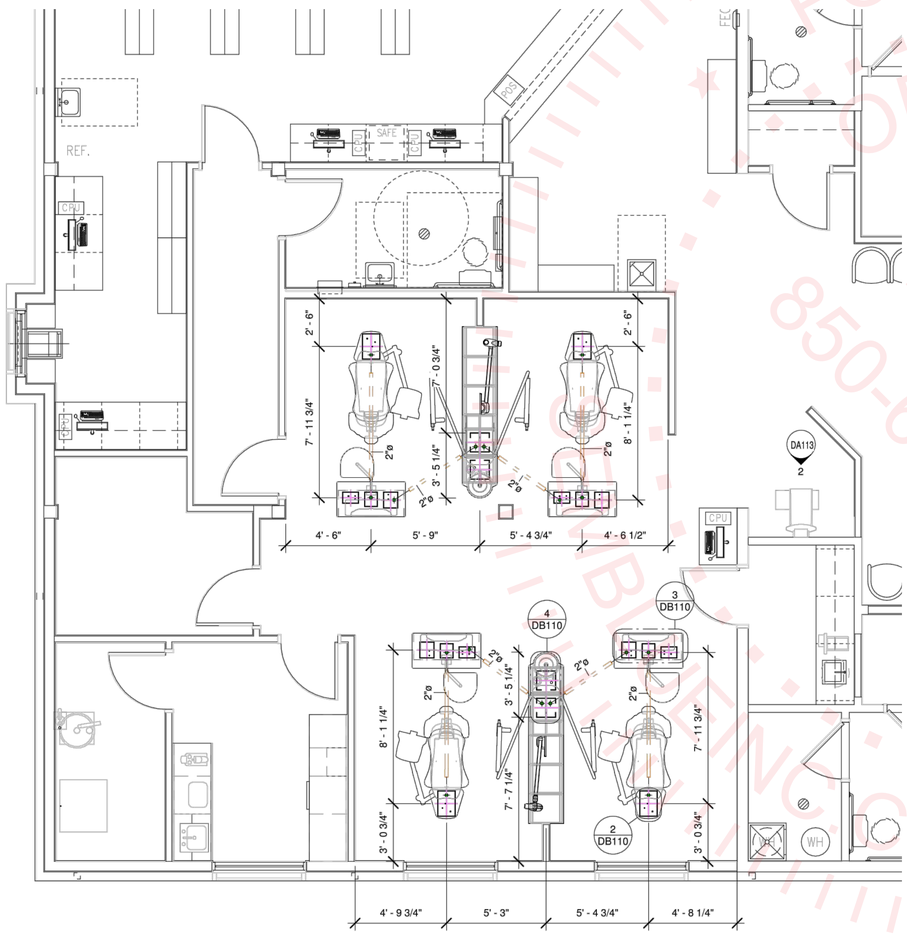

1 LVL 1 UNDER FLOOR UTILITY PLAN
1/4" = 1'-0"

1 N E101 DENTAL EQUIPMENT PLAN - NEW WORK
SCALE: N.T.S.

GENERAL NOTE(S) FOR ELECTRICAL CONTRACTOR:

–THIS SHEET IS SUPPLEMENTAL TO 'E–100' TO DENOTE ADD'L CLARIFICATION OF DENTAL VENDOR REQUIREMENTS. A COMPLETE SET OF DENTAL DRAWINGS (W/ DETAILS) WAS UNAVAILABLE DURING DESIGN.
REQUIRED RACEWAYS/BACKBOXES/JUNCTION BOXES, ETC...

–PRIOR TO CONSTRUCTION, ELECTRICAL CONTRACTOR SHALL COORDINATE WITH DENTAL EQUIPMENT VENDOR/DRAWINGS ALL REQUIRED REQUIRED RACEWAYS, JUNCTIONS BOXES, AND POWER/LV CONTROL FOR VENDOR FURNISHED DENTAL EQUIPMENT. PRIOR TO BID, ELECTRICAL CONTRACTOR SHALL ACQUIRE A COMPLETE SET OF DENTAL EQUIPMENT DRAWINGS FROM GC/ARCHITECT FOR COORDINATION AND DETAILS.
NOT ALL RACEWAYS, J–BOXES, CONTROL WIRING, ETC... REQUIRED FOR DENTAL EQUIPMENT.

–REDUNDANT GROUNDING SHALL BE PROVIDED IN ALL PATIENT CARE AREAS AND EXAM ROOMS. REFER TO NEC 517.13 FOR ALL LOCATIONS REQUIRED AND ACCEPTABLE METHODS OF GROUNDING. 'MC' CABLE MAY BE USED IN APPLICABLE AREAS PER APPROVAL. IN EXISTING AREAS THAT REQUIRE REDUNDANT GROUNDING, EC SHALL PROVIDE REDUNANT GROUNDING WHERE REQUIRED PER NEC.

FOR REVIEW PURPOSES ONLY
ORDER PLANS FROM:
850-671-2714
HIGHRISEBUILDING.COM

ELECTRICAL SYMBOLS IN FLOOR

ALL DEVICES SHALL BE INSTALLED PER STATE AND LOCAL CODE. ALL LOCATIONS SHOULD BE VERIFIED WITH PATTERSON REP OR OWNER PRIOR TO PLACEMENT.

+XX" - INDICATES HEIGHT FROM FINISHED FLOOR TO CENTER OF DEVICE UNLESS OTHERWISE NOTED BELOW, IF ITEM NOT TAGGED HEIGHT IS 18" A.F.F.

QTY.	SYM.	DESCRIPTION
4		120v DUPLEX OUTLET FLOOR, IF TAG NOT PRESENT HEIGHT IS 1" A.F.F. TO BOTTOM OF DEVICE
4		120v QUAD OUTLET FLOOR, MOUNTED ON FLOOR
6		J-BOX FLOOR, IF TAG NOT PRESENT HEIGHT IS 1" A.F.F.

LOW VOLTAGE SYMBOLS

ALL DEVICES SHALL BE INSTALLED PER STATE AND LOCAL CODE. ALL LOCATIONS SHOULD BE VERIFIED WITH PATTERSON REP OR OWNER PRIOR TO PLACEMENT.

+XX" - INDICATES HEIGHT FROM FINISHED FLOOR TO CENTER OF DEVICE UNLESS OTHERWISE NOTED BELOW, IF ITEM NOT TAGGED HEIGHT IS 18" A.F.F.

QTY.	SYM.	DESCRIPTION
16		CONDUIT FLOOR STUB OUT, IF TAG NOT PRESENT HEIGHT IS 1" A.F.F.
4		DATA DEVICE FLOOR, IF TAG IS NOT PRESENT HEIGHT IS 1" A.F.F.

PLUMBING SYMBOLS IN FLOOR

ALL DEVICES SHALL BE INSTALLED PER STATE AND LOCAL CODES. ALL LOCATIONS SHOULD BE VERIFIED WITH PATTERSON REP OR OWNER PRIOR TO PLACEMENT.

+XX" - INDICATES HEIGHT FROM FINISHED FLOOR TO CENTER OF DEVICE UNLESS OTHERWISE NOTED BELOW, IF ITEM NOT TAGGED HEIGHT IS 18" A.F.F.

QTY.	SYM.	DESCRIPTION
9		1/2" OD. TO 3/8" OD.SHUT OFF AIR CONNECTION FLOOR HEIGHT 3" A.F.F. TO CENTER UNLESS OTHERWISE NOTED
2		DIRECT DRAIN FLOOR
2		SHUT OFF VALVE COLD WATER FLOOR
2		SHUT OFF VALVE HOT WATER FLOOR
8		VACUUM PIPE CONNECTION FLOOR
1		VACUUM RISER FLOOR

ELECTRICAL LEGEND

	18/3 WIRE, CABLE RUN IN WALLS OR ABOVE FINISHED CEILING
	18/4 WIRE, WIRES RUN IN WALLS OR ABOVE FINISHED CEILING
	CAT5e OR BETTER CABLE, CABLE RUN IN WALLS OR ABOVE FINISHED CEILING
	MANUFACTURER CABLE, CABLE RUN IN WALLS OR ABOVE FINISHED CEILING
	ELECTRICAL CONDUIT UNDER FLOOR, SIZE AS INDICATED ON PLAN
	ELECTRICAL CONDUIT ABOVE CEILING, SIZE AS INDICATED ON PLAN

WATFORD ENGINEERING
4452 Clinton Street Marianna, Florida 32446
311 N. College St. Office 101B Auburn, AL 36830
Florida CA Number: 27825
Anthony L Davis, PE
Florida License Number: 57419
850.526.3447
Project Number: 2023-091
Checked By: ALD
Drawn By: KEF

DAG ARCHITECTS
DAG Architects AR0009694
455 Harrison Ave Suite I Panama City, FL 32401
850.387.1671
www.DAGarchitects.com

BID DOCUMENTS

PANCARE OF FLORIDA, INC.
RENOVATIONS & NEW CONSTRUCTION FOR PANCARE CHIPLEY
1440 MAIN ST, CHIPLEY, FL 32428

PANCARE OF FLORIDA, INC.

REVISIONS:

No.	Description	Date

DENTAL PLAN & DETAILS - NEW WORK

PROJECT NUMBER	23071
DATED	02/05/2024

E102

© 2021 DAG ARCHITECTS, INC. ALL RIGHTS RESERVED NO PART OF THIS DOCUMENT MAY BE COPIED, REPRODUCED OR TRANSMITTED BY ANY MEANS WITHOUT WRITTEN PERMISSION OF DAG ARCHITECTS, INC. AND SHALL NOT BE USED ON ANY OTHER PROJECT OR LOCATION EXCEPT AS DESCRIBED ON THE DRAWINGS. WITHOUT THE PRIOR WRITTEN AGREEMENT OF DAG ARCHITECTS. ARE THE PROPERTY AND COPYRIGHT OF DAG ARCHITECTS, INC.

23071
PRELIMINARY REVIEW SET
09/01/2023

GENERAL NOTE(S) FOR ELECTRICAL CONTRACTOR:

–REDUNDANT GROUNDING SHALL BE PROVIDED IN ALL PATIENT CARE AREAS AND EXAM ROOMS. REFER TO NEC 517.13 FOR ALL LOCATIONS REQUIRED AND ACCEPTABLE METHODS OF GROUNDING. 'MC' CABLE MAY BE USED IN APPLICABLE AREAS PER APPROVAL

KEYNOTES:

1. REFER TO ELECTRICAL LEGEND FOR REQUIRED 0–10V DIMMING CIRCUIT.
2. FOR SECURITY PURPOSES, FIXTURE TO BE WIRED FOR CONTINUOUS 24 HOUR OPERATION.
3. REFER TO 'ELECTRICAL LEGEND' FOR REQUIRED 0–10V 2–WIRE CIRCUIT FOR DIMMING.
4. EC SHALL RECONNECT EXISTING EMERGENCY FIXTURE AS SHOWN.
5. PER MECHANICAL DESIGN, EXHAUST FAN SHALL BE INTERLOCKED WITH LIGHTING FIXTURE SERVING AREA.
6. EC SHALL COORDINATE WITH MECHANICAL CONTRACTOR TO INTERLOCK EXHAUST FAN WITH HVAC CONTROLS.
7. DURING DEMOLITION PHASE, EC TO IDENTIFY WHICH BREAKERS ARE TO HAVE NO LOAD REMAINING. CONNECT NEW HOMERUN TO 20/1 BREAKER IN IN PANEL 'EP'. IF NO BREAKER IS AVAILABLE, INSTALL 20/1 BREAKER IN PANEL 'EP' AND CONNECT HOMERUN TO IT.
8. EC TO ENSURE EXISTING WALL/SIGN LIGHTING FIXTURES ARE CONNECTED AND OPERATIONAL TO EXTERIOR LIGHTING CIRCUIT.

1 E200 LIGHTING PLAN - NEW WORK

SCALE: 3/16" = 1'-0"

© 2021 DAG ARCHITECTS, INC. ALL RIGHTS RESERVED NO PART OF THIS DOCUMENT MAY BE COPIED, REPRODUCED OR TRANSMITTED BY ANY MEANS WITHOUT WRITTEN PERMISSION OF DAG ARCHITECTS, INC. THESE DRAWINGS AND SPECIFICATIONS ARE THE PROPERTY AND COPYRIGHT OF DAG ARCHITECTS, INC. AND SHALL NOT BE USED ON ANY OTHER PROJECT OR LOCATION EXCEPT AS DESCRIBED ON THE DRAWINGS, WITHOUT THE PRIOR WRITTEN AGREEMENT OF DAG ARCHITECTS.

WATFORD ENGINEERING
4452 Clinton Street Marianna, Florida 32446
311 N. College St. Office 101B Auburn, AL 36830

Florida CA Number: 27825
Anthony L Davis, PE
Florida License Number: 57419
850.526.3447
Project Number: 2023-091
Checked By: ALD
Drawn By: KEF

DAG ARCHITECTS
DAG Architects AR0009694
455 Harrison Ave Suite I Panama City, FL 32401
850.387.1671
www.DAGarchitects.com

BID DOCUMENTS

PANCARE OF FLORIDA, INC.
RENOVATIONS & NEW CONSTRUCTION FOR PANCARE CHIPLEY
1440 MAIN ST, CHIPLEY, FL 32428

PANCARE OF FLORIDA, INC.

REVISIONS:

No.	Description	Date

LIGHTING PLAN - NEW WORK

PROJECT NUMBER	23071
DATED	02/05/2024

E200

23071
PRELIMINARY REVIEW SET
08/01/2023

© 2021 DAG ARCHITECTS, INC. ALL RIGHTS RESERVED NO PART OF THIS DOCUMENT MAY BE COPIED, REPRODUCED OR TRANSMITTED BY ANY MEANS WITHOUT WRITTEN PERMISSION OF DAG ARCHITECTS, INC. THESE DRAWINGS AND SPECIFICATIONS ARE THE PROPERTY AND COPYRIGHT OF DAG ARCHITECTS, INC. AND SHALL NOT BE USED ON ANY OTHER PROJECT OR LOCATION EXCEPT AS DESCRIBED ON THE DRAWINGS, WITHOUT THE PRIOR WRITTEN AGREEMENT OF DAG ARCHITECTS.

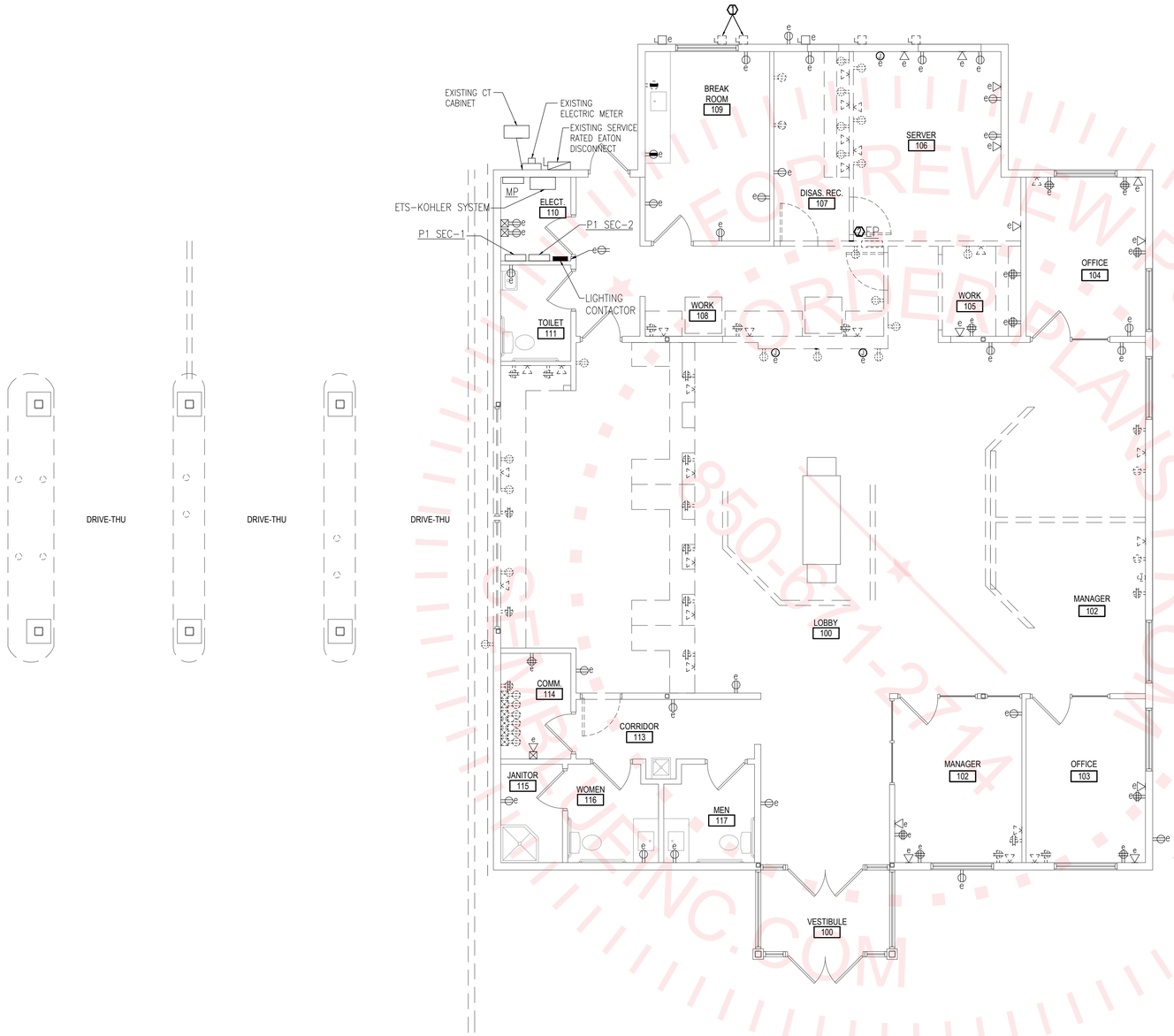

FOR REVIEW PURPOSES ONLY
NOT FOR BIDDING OR PERMITTING
CALL 850-871-2214 FOR PLANS
GENERALDESIGNINC.COM

N 1 ED100 POWER PLAN - DEMOLITION
SCALE: 3/16" = 1'-0"

ELECTRICAL DEMOLITION LEGEND (THIS SHEET ONLY)

WALL OUTLETS

- EXISTING DUPLEX RECEPTACLE TO REMAIN.
- EXISTING DUPLEX RECEPTACLE TO BE REMOVED.
- EXISTING COUNTERTOP DUPLEX RECEPTACLE TO REMAIN.
- EXISTING COUNTERTOP DUPLEX RECEPTACLE TO BE REMOVED.
- EXISTING SURFACE MOUNTED DUPLEX RECEPTACLE TO REMAIN.
- WP EXISTING DUPLEX RECEPTACLE WITH WEATHERPROOF BOX TO REMAIN.
- EXISTING QUADRAPLEX RECEPTACLE TO REMAIN.
- EXISTING QUADRAPLEX RECEPTACLE TO BE REMOVED.
- WP EXISTING 120V, 30A PLUG WITH WEATHERPROOF BOX TO REMAIN.
- EXISTING DATA OUTLET TO REMAIN.
- EXISTING DATA OUTLET TO BE REMOVED.
- EXISTING JUNCTION BOX TO BE REMAIN.
- EXISTING DISCONNECT TO REMAIN.

KEYNOTES:

1. EXISTING DISCONNECT FOR 'ODHP-1' PREVIOUSLY CONTAINED FEED-THROUGH CIRCUIT THAT SERVES EXISTING MECHANICAL UNIT 'MSAC-1'. 'ODHP-1' IS TO BE REPLACED WITH A LARGER UNIT. EC TO RECONNECT EXISTING CIRCUIT TO NEW 30/2/3R (FUSED 20A). EXISTING 'MSAC-1' TO BE RECONNECTED TO NEW DISCONNECT. REFER TO SHEET 'E100' FOR REQUIRED NEW CIRCUIT/DISCONNECT FOR NEW UNIT 'ODHP-1'.
2. EXISTING PANEL 'EP' IS RECESSED IN WALL BEING REMOVED. EC TO NOTE ALL EXISTING CIRCUITS THAT HAVE LOAD AND REMOVE ALL CIRCUITS BACK TO SOURCE. FOR RE-INSTALLATION SEE NEW WORK PLAN SHEET 'E100' FOR MORE INFORMATION.

WATFORD ENGINEERING
4452 Clinton Street Marianna, Florida 32446
311 N. College St. Office 101B Auburn, AL 36830
Florida CA Number: 27825
Anthony L Davis, PE
Florida License Number: 57419
850.526.3447
Project Number: 2023-091
Checked By: ALD
Drawn By: KEF

DAG ARCHITECTS
DAG Architects AR0009694
455 Harrison Ave Suite I Panama City, FL 32401
850.387.1671
www.DAGarchitects.com

BID DOCUMENTS

PANCARE OF FLORIDA, INC.
RENOVATIONS & NEW CONSTRUCTION FOR PANCARE CHIPLEY
1440 MAIN ST, CHIPLEY, FL 32428

PANCARE OF FLORIDA, INC.

REVISIONS:

No.	Description	Date

POWER PLAN - DEMOLITION

PROJECT NUMBER	23071
DATED	02/05/2024

ED100

23071
PRELIMINARY REVIEW SET
08/01/2023

© 2021 DAG ARCHITECTS, INC. ALL RIGHTS RESERVED NO PART OF THIS DOCUMENT MAY BE COPIED, REPRODUCED OR TRANSMITTED BY ANY MEANS WITHOUT WRITTEN PERMISSION OF DAG ARCHITECTS, INC. THESE DRAWINGS AND SPECIFICATIONS ARE THE PROPERTY AND COPYRIGHT OF DAG ARCHITECTS, INC. AND SHALL NOT BE USED ON ANY OTHER PROJECT OR LOCATION EXCEPT AS DESCRIBED ON THE DRAWINGS, WITHOUT THE PRIOR WRITTEN AGREEMENT OF DAG ARCHITECTS.

ELECTRICAL DEMOLITION LEGEND (THIS SHEET ONLY)

CEILING OUTLETS

- EXISTING RECESSED 2' X 4' FLUORESCENT/LED LIGHTING FIXTURE TO BE REMOVED.
- EXISTING RECESSED 2' X 4' FLUORESCENT/LED LIGHTING FIXTURE TO REMAIN.
- EXISTING RECESSED 1' X 4' FLUORESCENT/LED LIGHTING FIXTURE TO BE REMOVED.
- EXISTING SUSPENDED MOUNTED 6' STRIP FLUORESCENT/LED LIGHTING FIXTURE TO BE REMOVED.
- EXISTING SUSPENDED MOUNTED 4' STRIP FLUORESCENT/LED LIGHTING FIXTURE TO BE REMOVED.
- EXISTING SUSPENDED MOUNTED 4' STRIP FLUORESCENT/LED LIGHTING FIXTURE TO REMAIN.
- EXISTING RECESSED LIGHTING FIXTURE TO BE REMOVED.
- EXISTING CEILING MOUNTED EXIT LIGHT TO BE REMOVED.
- EXISTING EXTERIOR WALL PACK TO BE REMOVED.
- EXISTING EXTERIOR WALL/SIGN LIGHT TO REMAIN.

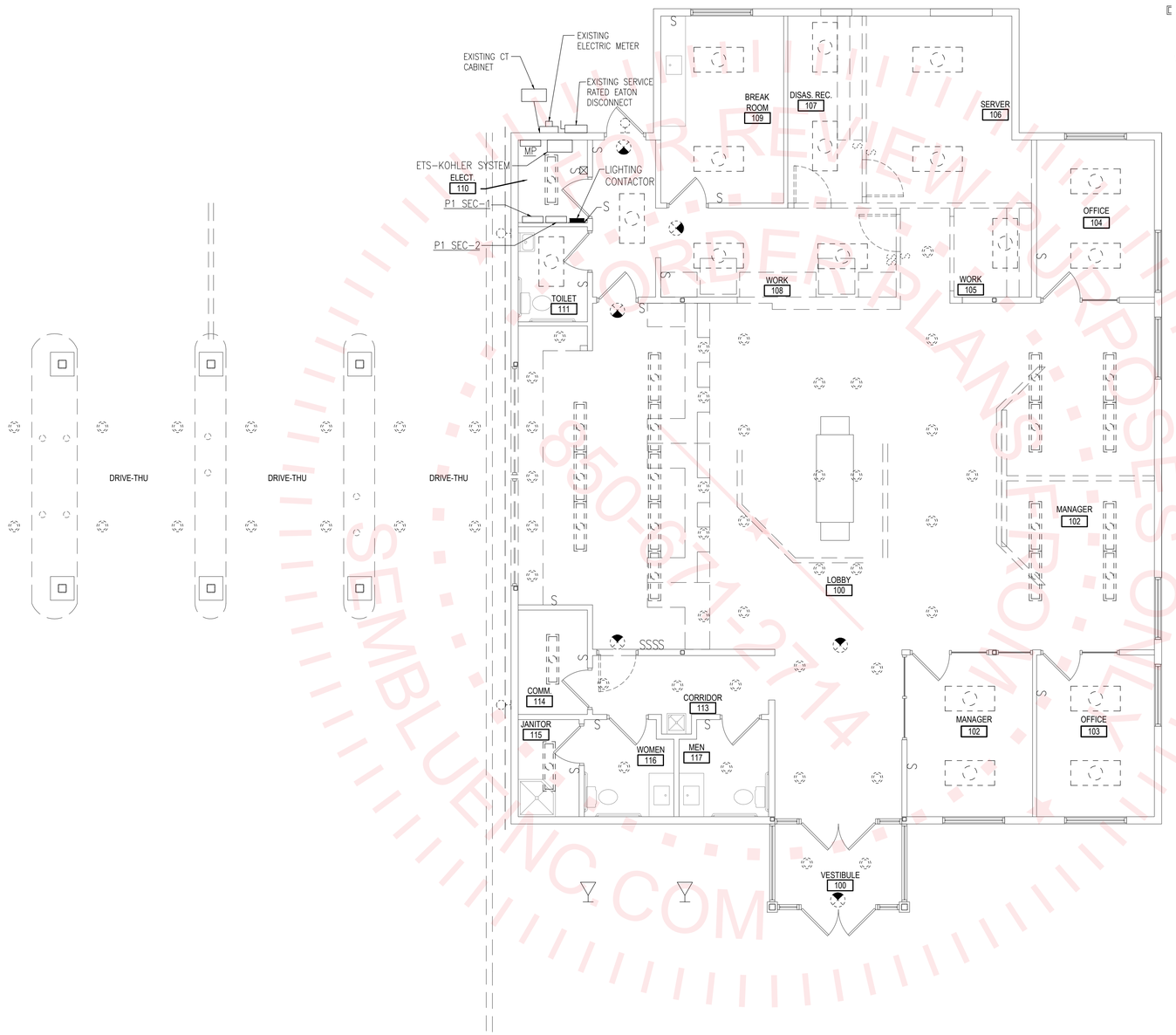

FOR REVIEW PURPOSES ONLY
NOT FOR CONSTRUCTION
SEMBLUE@GMAIL.COM
850-641-2714

N 1 ED200

LIGHTING PLAN - DEMOLITION

SCALE: 3/16" = 1'-0"

WATFORD ENGINEERING
4452 Clinton Street Marianna, Florida 32446
311 N. College St. Office 101B Auburn, AL 36830

Florida CA Number: 27825
Anthony L Davis, PE
Florida License Number: 57419
850.526.3447
Project Number: 2023-091
Checked By: ALD
Drawn By: KEF

DAG ARCHITECTS
DAG Architects AR0009694
455 Harrison Ave Suite I Panama City, FL 32401
850.387.1671
www.DAGarchitects.com

BID DOCUMENTS

PANCARE OF FLORIDA, INC.
RENOVATIONS & NEW CONSTRUCTION FOR PANCARE CHIPLEY
1440 MAIN ST, CHIPLEY, FL 32428

PANCARE OF FLORIDA, INC.

REVISIONS:

No.	Description	Date

LIGHTING PLAN - DEMOLITION

PROJECT NUMBER	23071
DATED	02/05/2024

ED200