General Description

The GH3038 is an ultra-small and low power AFE for PPG applications, such as HRM and SpO2 measurement. The device supports up to 4 LEDs and 2 drivers each with 8-bit current control which can get the maximum 320mA driver capability. The AFE supports a maximum of 4 PDs in single-ended or 2 PDs in differential inputs, as well as 1 receiver channels integrated with BG cancellation and DC cancellation module for high dynamic range respectively. Up to 8 time slots with flexible and simple configuration can help users to achieve high SNR data acquisition.

The GH3038 operates on a 1.9V-3.6V main supply voltage. The device supports both I2C and SPI compatible interface. The device has a large 256-samples built in FIFO. It is available in a compact WLCSP-25 package, 1.88mmx1.88mm size with 0.35mm pitch. Due to its low power consumption, compact size, ease and flexibility of use, it's ideal for a wide variety of PPG applications such as smart ring, earphone and wristband.

Applications

- Smart watches, fitness wristbands
- Smart hearable, smart ring
- Pulse Oximetry measurements
- Health monitoring medical accessories

Features

- Supports PPG acquisition of up to 8 time slots
- Support up to 4 LEDs, 4 PDs
- Low current for continuous HRM with a typical 20 µA @ 25 Hz, BGR=1, Tint=39µs
- Transmitter
  - Two 8-bit programmable LED drivers, support fire two drivers in parallel with independent per-phase current control
  - Each driver range from 20mA to 160mA, totally 320mA peak drive current
  - Low forward voltage: 0.3V@160mA to support LED supplied by VSYS from battery directly.
- Receiver
  - Support max 4 time-multiplexed PD inputs
  - 1 parallel receivers (1 sets of TIA/ADC)
  - Individual background (BG) light cancellation and DC cancellation 8-Bit DACs at each TIA input, each range from 32µA to 256µA
  - Input referred noise: 19.9 pArms@ Rf=500kΩ, Tints=39 µs, output data rate(ODR)=100Hz
  - Trans-Impedance gain: 10 kΩ to 1 MΩ
  - Peak system SNR of 108dB in 0.5Hz-5Hz to ensure accurate PPG monitoring
- Build-in functions
  - Automatic DC cancellation logic, max 64x dynamic range extension(DRE) benefit
- Supports SPI and I2C communications
- Supports external clock or internal oscillator
- Internal FIFO depth: 256 samples
- 1.88mm x 1.88mm WLCSP-25, 0.35mm pitch
- Supplies
  - AVDD: 1.9-3.6V
  - VLED: 3.0- 5.5 V
  - VDDIO: 1.62- 3.6V

Goodix Confidential For licensed customer only
Goodix Confidential

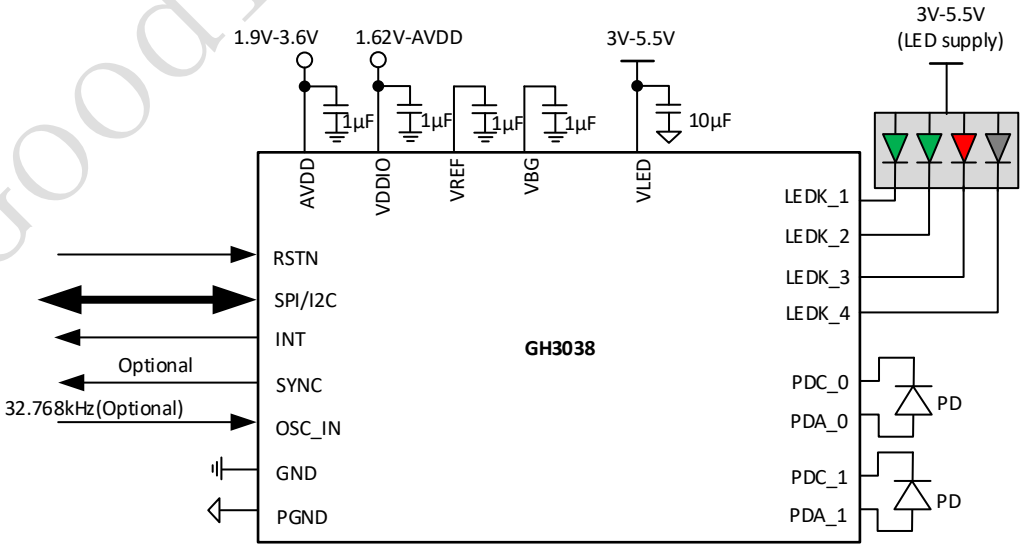

Typical Application

Copyright ©2025 Shenzhen Goodix Technology Co., Ltd

Contents

General Description **1**
Applications **1**
Features **1**
Revision History **2**
1 Pinout **3**
1.1 Pin Assignment 3
1.2 Pin Definition 3
2 Specifications **5**
2.1 Absolute Maximum Ratings 5
2.2 Recommended Operating Conditions 5
2.3 Power Consumption 5
2.4 Electrical Characteristics 5
2.4.1 Analog Circuit Parameters 5
2.4.2 Digital Circuit Parameters 6
2.5 Timing Parameters 6
2.5.1 Reset Management 6
2.5.2 SPI Timing 7
2.5.3 I^2C Timing 7
3 Package **9**
3.1 Package Drawing 9
3.2 Marking Rule 10
4 Storage and Soldering Information **11**
4.1 Storage Information 11
4.2 SMT Requirements 11
4.2.1 Pb-Free Reflow Temperature Profile 11
4.2.2 Requirements on SMT Equipment 12
4.3 Tape& Reel Information 12
5 Glossary and Abbreviations **13**
6 Legal& Contact Information **14**

Revision History

Revision	Date	Description
0.1	Apr. 22 2025	Initial version
1.0	Sept. 25 2025	Added figures and updated tables

Goodix Confidential For lierda_hd@lierda.com Only
Goodix Confidential

Copyright ©2025 Shenzhen Goodix Technology Co., Ltd

1 Pinout

1.1 Pin Assignment

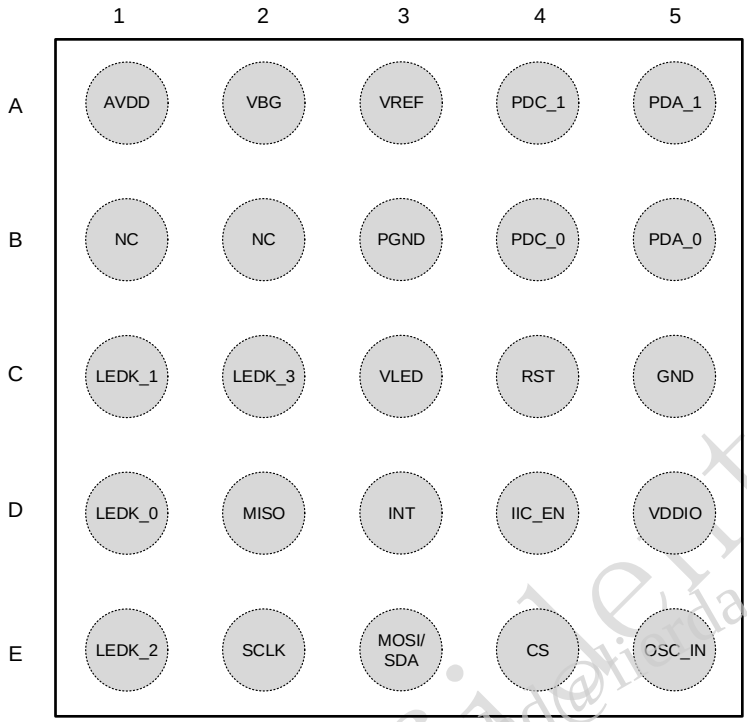

Figure 1-1 GH3038 pin assignment (Top View)

1.2 Pin Definition

Table 1-1 GH3038 Pin Definition

Pin Name	Ball No.	Type	Descriptions
AVDD	A1	PWR	Power supply. Requires an external decoupling capacitor(1μF) to GND
VDDIO	D5	PWR	IO power supply requires an external decoupling capacitor to GND
VLED	C3	PWR	Analog power supply for LED Driver, requires an 10μF decoupling capacitor
VREF	A3	PWR	Internal reference supply, requires an external decoupling 1μF capacitor. No external load or input is allowed.
VBG	A2	PWR	Internal bandgap supply, requires an external decoupling 1μF capacitor. No external load or input is allowed.
PGND	B3	GND	Power Ground
GND	C5	GND	System Ground
RST	C4	DIO	Chip reset or enters ultra-lower power mode
INT	D3	DIO	Interrupt output
OSC_IN	E5	DI	External 32.768kHz clock input/ SYNC_IN/ SYNC_OUT
MOSI	E3	DIO	SPI input/I2C data
MISO	D2	DO	SPI output
SCLK	E2	DI	SPI clock/ I2C clock
CS	E4	PWR	SPI chip select
IIC_EN	D4	GND	I2C mode selection when PoR stage: 0, SPI mode; 1, I2C mode SYNC_IN / SYNC_OUT GPIO
PDA_0	B5	PPG	PD0 input, negative end. Connect to Anode of the corresponding PD.
PDC_0	B4	PPG	PD0 input, positive end. Connect to Cathode of the corresponding PD.
PDA_1	A5	PPG	PD1 input, negative end. Connect to Anode of the corresponding PD.

Goodix Confidential For lierda_lide@lierda.com Only

Pin Name	Ball No.	Type	Descriptions
PDC_1	A4	PPG	PD1 input, positive end. Connect to Cathode of the corresponding PD.
LEDK_0	D1	PPG	LEDK0 sink drive. Connect to cathode of LED externally and to LED Driver internally.
LEDK_1	C1	PPG	LEDK1 sink drive. Connect to cathode of LED externally and to LED Driver internally.
LEDK_2	E1	PPG	LEDK2 sink drive. Connect to cathode of LED externally and to LED Driver internally.
LEDK_3	C2	PPG	LEDK3 sink drive. Connect to cathode of LED externally and to LED Driver internally.
NC	B2		NC
NC	B1		

Goodix Confidential
Goodix Confidential For lierda_hd@lierda.com Only

2 Specifications

2.1 Absolute Maximum Ratings

Table 2-1 GH3038 Absolute Maximum Ratings

Description	Symbol	Conditions	Min.	Typ.	Max.	Unit
Voltage Rating	AVDD		-0.3		3.9	V
	LEDK_[0:3]		-0.3		6.0	V
	VDDIO		-0.3		3.9	V
	VLED		-0.3		6.0	V
	DIO		-0.3		3.9	V
ESD	ESD_{HBM}	Human body model, JEDEC JS-001, all pins	±2			kV
	ESD_{CDM}	Charged device model, JESD22-C101, all pins	±0.5			
Temperature	T_J	Operating Junction temperature	-30		85	°C
	T_S	Storage temperature	-40		125	

Notes:

1. *Stresses above these ratings may cause permanent damage.*
2. *These are stress ratings only, and functional operation of the device at these or any other conditions beyond those specified is not implied.*
3. *Exposure to absolute maximum conditions for extended periods may degrade device reliability.*

2.2 Recommended Operating Conditions

Table 2-2 Recommended Operating Conditions

Description	Symbol	Conditions	Min.	Typ.	Max.	Unit
AVDD Supply	AVDD	AFE main power supply	1.9		3.6	V
TX Supply	VLED	LED Driver supply	3.0		5.5	V
I/O Power	VDDIO	VDDIO ≤ AVDD	1.62		3.6	V
	VREF	Internal Reference, no external load		1.8		V
	VBG	Internal Bandgap, no external load		0.9		V
	T_A	Ambient temperature	-30	25	85	°C

2.3 Power Consumption

AVDD=3.3V, VREF=1.8V, VLED=5V (Typ. T_J = 25°C, Max T_J =85°C), unless otherwise noted.

Table 2-3 Power Consumption at Different Mode

Description	Symbol	Conditions	Min.	Typ.	Max.	Unit
Sleep power	I_{AVDD}	Deep sleep, RSTN pulled low			1	μA
		Sleep mode, VCM_pulse_mode, FIFO powercut, AVDD=3.3V		8		
Wear on detection power		Optical mode, 5Hz, Tint=10μs, BGL=1		10		
Typical HRM Power		25Hz, 1-slot, Tint=39us, BGL=1		20		
Typical SpO2 Power		25Hz, 2-slot, Tint=39us, BGL=2		33		
Multimodal Power		25Hz, 4-slot, Tint=39us, BGL=2		52		

2.4 Electrical Characteristics

2.4.1 Analog Circuit Parameters

AVDD=3.3V, VREF=1.8V (Typ. T_J = 25°C, Max T_J =85°C), unless otherwise noted.

Table 2-4 PPG Signal Chains Parameters

Description	Symbol	Conditions	Min.	Typ.	Max.	Unit
PPG receiver						
PD input Channel				1	4	
PPG Channel		TIA and ADC sets		1		
TIA Gain	R_F		10	100	1000	kΩ
TIA Gain Error	R_{F_ERROR}		-5		+5	%

Goodix Confidential
Goodix Confidential For jierda_hd@jierda.com only

Description	Symbol	Conditions	Min.	Typ.	Max.	Unit
Integration Time	T_{INT}		9.8	39	316	µs
PD junction Capacitive	C_{PD}	programmable Capacitive loading capacity	50		400	pF
AC input current	I_{AC}	R_F=10kΩ		±90		µA
		R_F=250kΩ		±3.6		
		R_F=1MΩ		±0.9		
Input referred noise	I_{NOISE_RTI}	R_F=50kΩ, T_{INT} =158µs, C_{PD} =50pF		60.1		pA_{RMS}
		R_F=250kΩ, T_{INT} =39µs, C_{PD} =50pF		33.5		
		R_F=500kΩ, T_{INT} =39µs, C_{PD} =50pF		19.9		
Background current	I_{BG}	Maximum BG input, 0.125x mode, 8-bit		32		µA
		Maximum BG input, 0.25x mode, 8-bit		64		
		Maximum BG input, 0. 5x mode, 8-bit		128		
		Maximum BG input, full scale mode, 8-bit		256		
DC offset current	I_{OFFSET}	Maximum DC input, 0.125x mode, 8-bit		32		µA
		Maximum DC input, 0.25x mode, 8-bit		64		
		Maximum DC input, 0. 5x mode, 8-bit		128		
		Maximum DC input, full scale mode, 8-bit		256		
Signal to Noise Ratio (PD to LED loop)	SNR	I_{AC}=1µA, R_F=500kΩ, T_{INT} =79µs,BGL=2, ODR=100Hz, BW=0.5Hz~50Hz		85		dB
		I_{AC}=10µA, R_F=50kΩ, T_{INT} =158µs,BGL=2, ODR=100Hz, BW=0.5Hz~50Hz		96		
		I_{AC}=60µA, R_F=10kΩ, T_{INT} =158µs,BGL=2, PRF=1kHz, BW=0.5Hz~5Hz		107		
PRF frequency	f_{PRF}	Pulse repetition frequency, equal to ODR	0.25		4000	Hz
PPG transmitter						
LED Current range per driver(x2 for two drivers in parallel)	I_{DRV}	0.125 x mode			20	mA
		0.25x mode(default value)			40	
		0.5x mode			80	
		Full scale mode			160	
Headroom voltage	$V_{HEADROOM}$	160mA, single drive		340		mV
		80mA, single drive		281		
LED current resolution				8		Bits

2.4.2 Digital Circuit Parameters

AVDD=3.3V, VREF=1.8V (Typ. T_J = 25°C, Max T_J =85°C), unless otherwise noted.

Table 2-5 Digital Circuit Characteristics

Parameter	Symbol	Conditions	Min.	Typ.	Max.	Unit
Digital Input						
High-level input voltage	VIH	-	VDDIO x 0.8	VDDIO	-	V
Low-level input voltage	VIL	-	-	0	VDDIO x0.2	V
Pull down resistor	PDR	-	-	25	-	kΩ
Digital Output						
High-level output voltage	VOH		-	VDDIO	-	V
Low-level output voltage	VOL		-	0	-	V
Low-level output current	IOL	VIO = VDDIO x 0.2; VDDIO = 1.8 V	-	7.4	-	mA
High-level output current	IOH	VIO = VDDIO x 0.8; VDDIO = 1.8 V	-	5.3	-	mA
Clock Accuracy						
OSC 32 kHz	-	Operating temperature range	-	±1	-	%

2.5 Timing Parameters

2.5.1 Reset Management

The chip's hardware reset and power-on sequence require a specific delay before its operation. The specific delay time requirements are shown in the table.

Table 2-6 Reset Timing Parameters

Goodix Confidential For Hierda_hde@hierda.com Only

Parameter	Symbol	Conditions	Min.	Typ.	Max.	Unit
Hardware Reset						
Hardware reset time	t_{RST}		1	2		ms
Power on Reset						
Power on reset time	t_{POR}			4		ms

2.5.2 SPI Timing

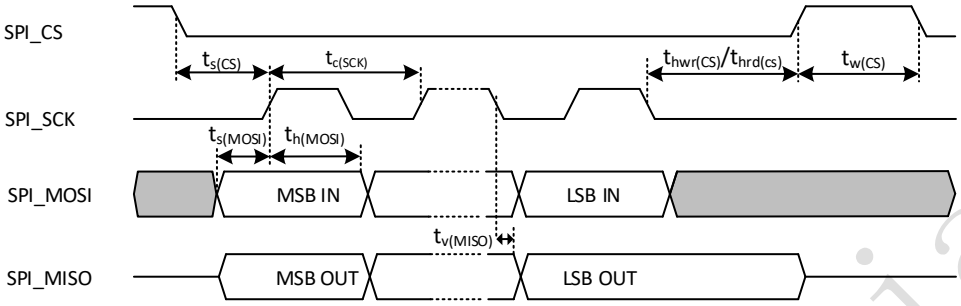

Figure 2-1 SPI timing diagram

If the driving capability of I/Os is configured to be "S1=1, S2=0", the timing parameters are as follows; if the driving capability of I/Os is enhanced, tv(MISO) will be improved accordingly.

AVDD=3.3V, VDDIO=1.8V, VREF=1.8V (Typ. T_J = 25°C, Max T_J =85°C), unless otherwise noted.

Table 2-7 SPI Timing Parameters

Parameter	Symbol	Conditions	Min.	Typ.	Max.	Unit
SPI_SCK clock duty cycle	$DuCy_{(SPI_SCK)}$		-	50	-	%
SPI_SCK clock speed	$1/tc_{(SCK)}$		-	4	12	MHz
SPI_CS setup time	$t_{s(cs)}$		62.5	-	-	ns
SPI_CS write operation hold time	$t_{hwr(cs)}$		0.5	-	-	µs
SPI_CS read operation hold time	$t_{hrd(cs)}$		62.5	-	-	ns
SPI_CS idle time	$t_{w(cs)}$		1	-	-	µs
Data input setup time	$t_{s(MOSI)}$		10	-	-	ns
Data input hold time	$t_{h(MOSI)}$		10			ns
Data output valid time	$t_{v(MISO)}$		-	6	10	ns

2.5.3 I²C Timing

The device features an I2C-compatible, 2-wire interface consisting of a serial-data line (SDA) and a serial-clock line (SCL). The SDA and SCL lines enable read and write communication between the IC and host at a rate of up to 1MHz. The IC is a slave device, relying on the host to generate the SCL signal. The host initiates data transfer on the bus and generates SCL to permit the transfer. Figure 2-2 shows the timing for the bus. The two bus lines (SDA and SCL) must be high when the bus is not in use. When in use, the port bits are toggled to generate the appropriate signals for SDA and SCL.

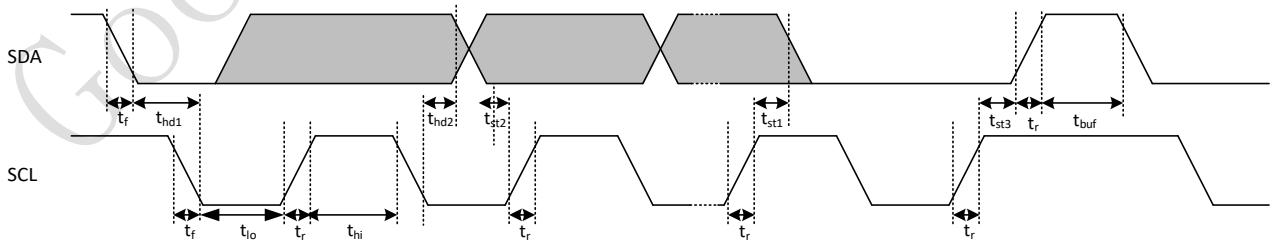

Figure 2-2 I2C timing diagram

Table 2-8 I2C Timing Parameters

Parameter	Symbol	Conditions	Min.	Typ.	Max.	Unit
Clock frequency	f_{SCL}		-		1	MHz
SCL low period	t_{lo}		0.5		-	µs
SCL high period	t_{hi}		0.4		-	µs
SCL setup time	t_{st1}	START condition	0.1		-	µs

Goodix Confidential For herda_hd@herda.com only

Parameter	Symbol	Conditions	Min.	Typ.	Max.	Unit
SCL setup time	t_{st3}	STOP condition	0.1		-	μs
SCL hold time	t_{hd1}	START condition	0.1		-	μs
SDA setup time	t_{st2}		0.1		-	μs
SDA hold time	t_{hd2}		0.1		-	μs
Bus free time	t_{buf}	Between a STOP and START condition	0.7			μs

The device monitors the bus continuously, waiting for a START condition followed by a slave address. There are a total of four possible slave addresses for the GH3038 and, therefore, a maximum of four GH3038 devices can be on the bus at one time.

Table 2-9 I2C Addresses

MISO	CS	Device Address (7 bits)	Write Address(8 bits)	Read Address(8 bits)
LOW	LOW	0x14	0x28	0x29
LOW	HIGH	0x15	0x2A	0x2B
HIGH	LOW	0x16	0x2C	0x2D
HIGH	HIGH	0x17	0x2E	0x2F

Goodix Confidential For lierda_hd@lierda.com Only
Goodix Confidential

3 Package

3.1 Package Drawing

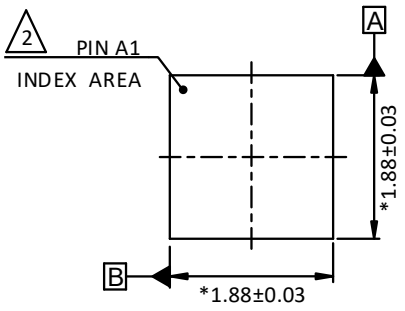

TOP VIEW

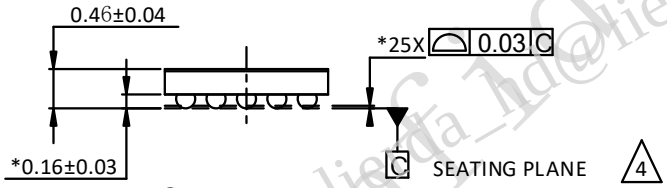

SIDE VIEW

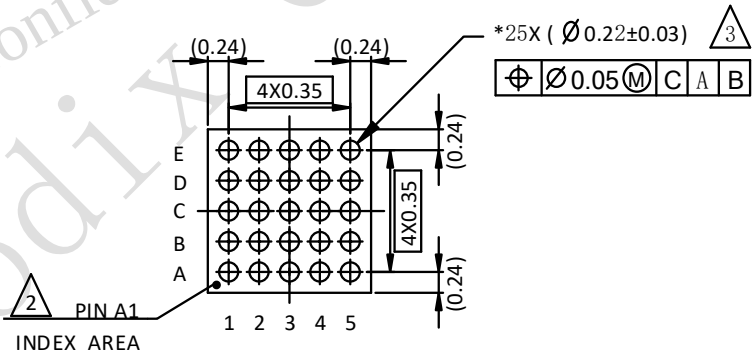

BOTTOM VIEW

Goodix Confidential
Goodix Confidential For lierda_hd@lierda.com Only

NOTES:

1. ALL DIMENSIONS IN MILLIMETERS.
2. PIN A1 FEATURE SHAPE, SIZE AND LOCATION MAY VARY.
3. MAXIMUM SOLDER BALL DIAMETER MEASURED PARALLEL TO DATUM C.
4. DATUM C, THE SEATING PLANE, IS DETERMINED BY THE SPHERICAL CROWNS OF THE SOLDER BALLS.
5. "*"IS KEY CONTROL DIMENSION.
6. THIS PACKAGE HAS A BACK SIDE COATING THICKNESS OF 0.025.

Copyright ©2025 Shenzhen Goodix Technology Co., Ltd.

3.2 Marking Rule

The products within the same batch feature the same marking information. The definition of the marking information is provided below:

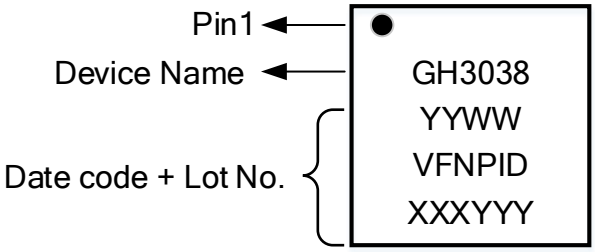

Figure 3-1 **Package marking sketch (Top View)**

Goodix Confidential
Goodix Confidential For lierda_hd@lierda.com Only

4 Storage and Soldering Information

4.1 Storage Information

GH3038 is classified as MSL1, not moisture-sensitive device. The device does not require special storage conditions provided that:

It is maintained at conditions equal to or less than 30°C/85% RH;

It is solder reflowed at a peak body temperature that does not exceed 260°C.

Note:
Moisture sensitivity level and body temperature are defined by IPC/JEDEC J-STD-020.

4.2 SMT Requirements

4.2.1 Pb-Free Reflow Temperature Profile

Follow the standard *J-STD-020D-01* of reflow and more particularly these parameters:

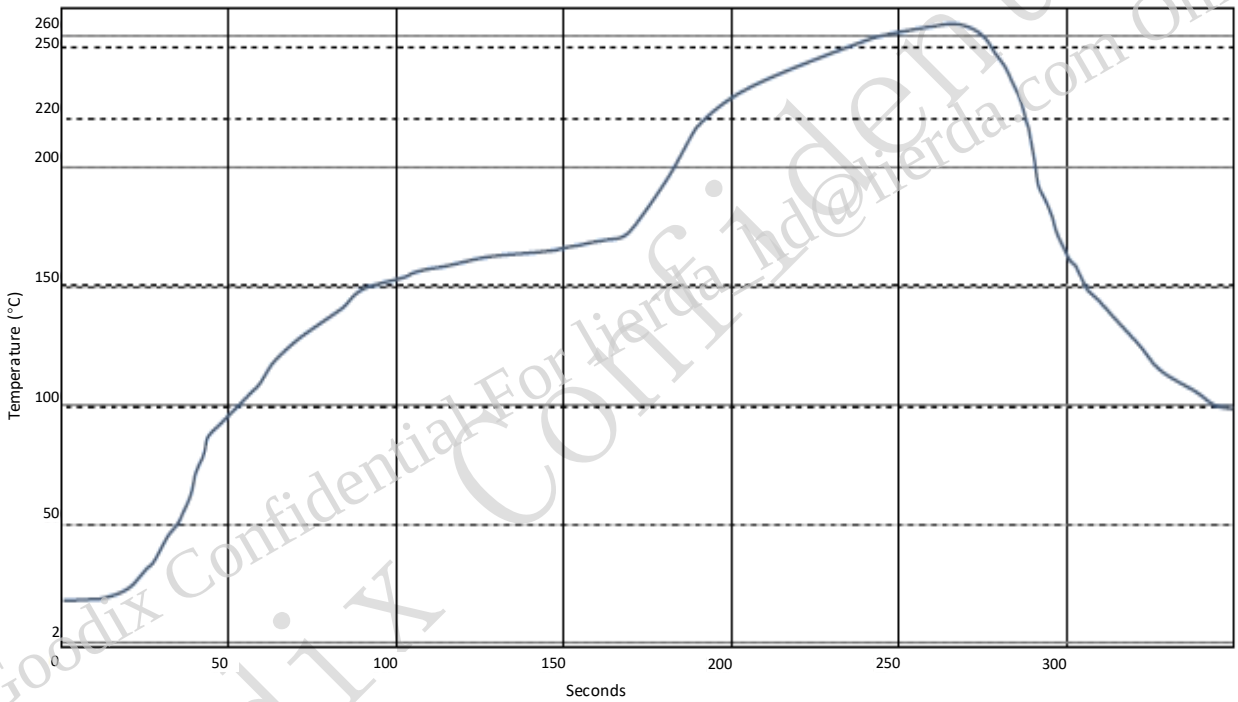

Figure 4-1 **Pb-free reflow temperature profile**

Table 4-1 Pb-free reflow Temperature Profile Parameters(Follow the standard J-STD-020D-01.)

Profile Feature				Pb-Free Assembly (For reference)		
Room temperature to peak temperature	A. Pre-heating zone (25°C–150°C)		Duration	80s–120s		The time spent on ramping up from room temperature to peak temperature should be less than 8 minutes.
			Ramp up rate	<3°C/s		
	B. Constant-temperature zone (150°C–200°C)		Duration	60s–120s (100s is recommended)		
			Ramp up rate	<1°C /s		
	Time above 217°C	C. 217°C–260°C	Duration	60s–85s	Time above 217℃: 60s–150s	
			Ramp up rate	<3°C/s		
		D. Peak Temp. (255°C–260°C)	Duration	20s–30s		
--		E. 260°C–217°C	Duration	60s–75s		--
			Ramp down rate	<6°C/s		--
--	F. Time below 217°C (cooling zone)		Ramp down rate	1°C/s–3°C/s		--

Goodix Confidential For lierda_hd@lierda.com Only

Notes:

1. *The peak temperature in the oven cannot exceed 260°C (refer to the reflow temperature profile of the specific solder paste); the temperature tolerance of the IC package material is less than 260°C, therefore, the SMT temperature must be lower than 260°C.*
2. *Rework is not recommended; if rework is inevitable, do not use a heat gun or soldering iron; rework station is recommended and make sure the temperature is lower than 260°C.*
3. *Number of thermal shocks: number of soldering (Reflow solder + Wave solder +Rework) passes: ≤ 3.*

4.2.2 Requirements on SMT Equipment

The chip mounter should be able to identify the pad location and offset tolerance (generally, the offset tolerance should be less than 50 µm; the chip must be located by identifying the pads on the bottom of the chip instead of identifying the chip outline). Microscope/SPI/AOI/X-Ray inspection equipment is used to check the alignment accuracy and whether there is a risk of short circuit or pseudo soldering.

A manual printer is not recommended (a fully-automatic printer is recommended and the automatic printer should be able to identify the mark on PCB/FPC). First piece inspection is required in printing.

4.3 Tape& Reel Information

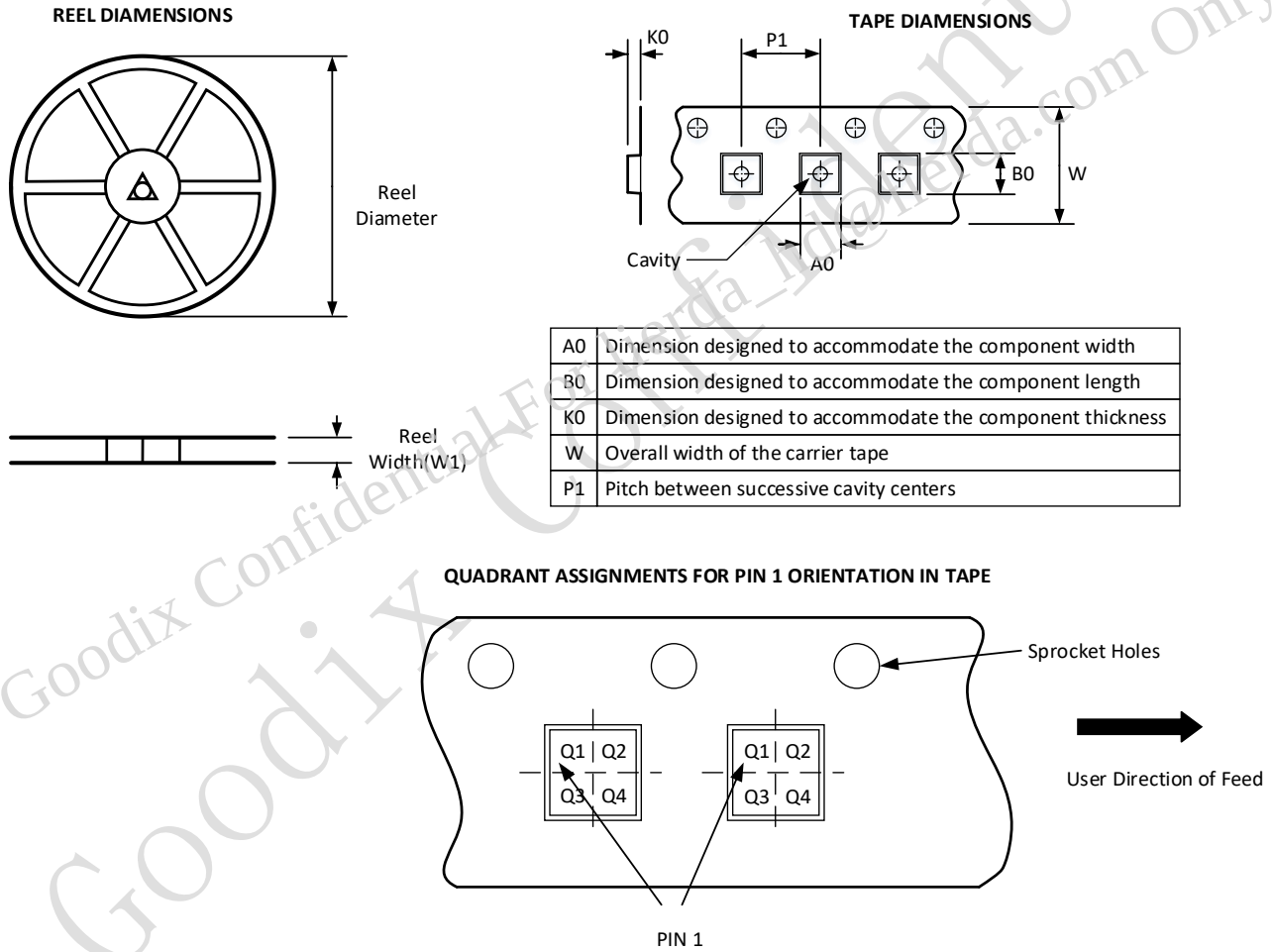

A0	Dimension designed to accommodate the component width
B0	Dimension designed to accommodate the component length
K0	Dimension designed to accommodate the component thickness
W	Overall width of the carrier tape
P1	Pitch between successive cavity centers

Figure 4-2 Tape and reel information

Table 4-2 Tape and Reel parameters

Device	Package Type	MPQ	Reel Diameter (mm)	Reel Width W1(mm)	A0 (mm)	B0 (mm)	K0 (mm)	P1 (mm)	W (mm)	Pin1 Quadrant
GH3038	WLCSP	3k	178±2.0	11.4	2.05	2.05	0.75	4	8	Q1

Goodix Confidential Goodix Confidential For sarta_lin@lenda.com Only

5 Glossary and Abbreviations

Name	Definitions
DI	Digital input
DO	Digital output
DIO	Digital input/output
AI	Analog input
PWR	Power
GND	Ground
DRE	Dynamic Range Extension
PD	Photodiode
PPG	Photoplethysmography
HRM	Heart Rate Measurment
SPO2	Percutaneous Oxygen Saturation
I2C	Inter integrated circuit
RMS	Root Mean Square
WLCSP	Wafer level chip scale package
PCB	Printed Circuit Board

Goodix Confidential For lierda_hd@lierda.com Only
Goodix Confidential

6 Legal& Contact Information

Copyright

Copyright © 2025 Shenzhen Goodix Technology Co., Ltd. All rights reserved.

This document contains information that is proprietary to Shenzhen Goodix Technology Co.,Ltd. ('GOODIX'). The holder of this document shall treat all information contained herein as confidential, shall use the information only for its intended purpose, and shall not duplicate, disclose, or disseminate any of this information in any manner unless GOODIX has provided express, written permission otherwise.

Trademarks

"汇顶", "汇顶科技", "GOODiX" are trademarks or registered trademarks of Shenzhen Goodix Technology Co., Ltd. or its affiliates.

Disclaimer

This document conveys no express or implied licenses to any intellectual property rights belonging to GOODIX. GOODIX assumes no liability whatsoever for any use of the information contained in this document or for the consequences arising from such use by the holder of this document. Unless there is an express written agreement with GOODIX, GOODIX makes no warranties of non-infringement of intellectual property rights.

The information contained in this document is only provided for convenience to the holder of this document, and GOODIX may, from time to time and at its sole option, update the information contained in this document without notice. GOODIX makes no representations or warranties, express or implied, written or oral, legal or otherwise, with respect to the information contained in this document, including, but not limited to, any representations or warranties with respect to its use, quality, performance, merchantability or fitness for a particular purpose. The holder of this document shall ensure that the information contained in this document is used in accordance with technical specifications. Without an express, written permission provided by GOODIX, it is not permitted to use GOODIX products as critical components in life support systems.

Any source code (software and/or firmware) contained in this document is proprietary to GOODIX, and the source code may not be reproduced, modified, converted, compiled, or demonstrated without express written permission of GOODIX.

Any solution data if involved in this document pertain to design value or typical value, and any control value of mass production represents the control solution or data for current production line. Delivery standard is based on the current control value, and final definition after verification by both parties shall prevail.

Goodix Confidential
Goodix confidential for internal use only

Shenzhen Goodix Technology Co., Ltd.

Headquarters: 26F, Goodix Headquarters, No.1 Meikang Road, Futian District, Shenzhen, China

TEL: +86-755-33338828

Website: http://www.goodix.com