GOODIX\zhengshengkun 2024-09-12 15:40:33

Host Interface

Communication Interface Selection

This application scheme supports both SPI and IIC communication interfaces which can be selected by configuring IICEN pin status.

Select	Communication Interface
IICEN is connected to GND	SPI
IICEN is connected to VDDIO	IIC

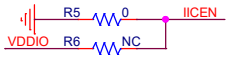

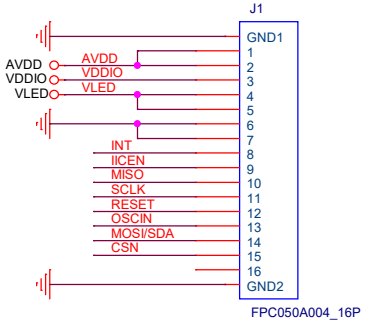

Note: When IIC interface is selected, IIC addresses can be configured through MISO and CSN; the MISO and CSN pins are left floating by default.

GH3036

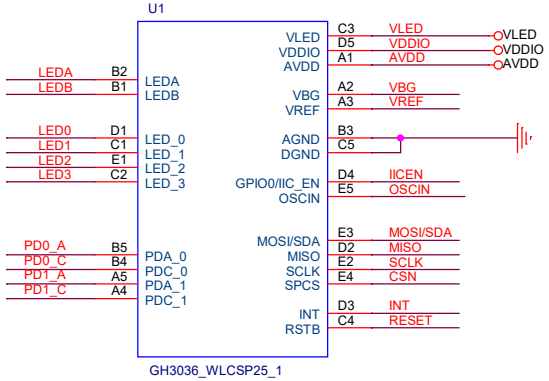

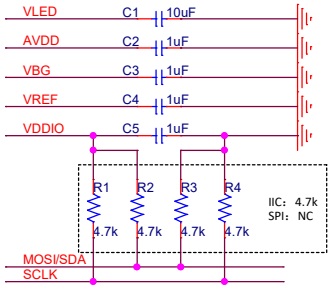

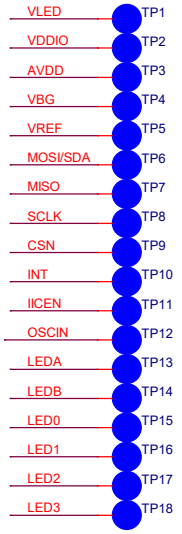

LED&PD

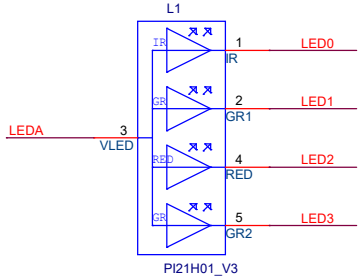

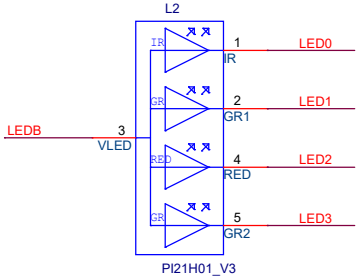

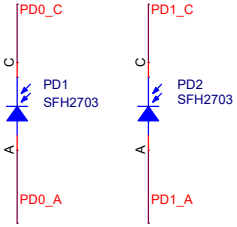

Note: LED channals can be selected from LED[0:3] according to the layout requirements.

System Power Supply Scheme

	AVDD Power Supply	VDDIO Power Supply	Notes
Scheme	2.7-5.5V ≥20mA	1.8-3.3V ≥20mA	1. Requirement on power supply noise: <100mVpp @0-1MHz bandwidth.

VLED Power Supply Scheme

	VLED Power Supply	Remark:
Scheme	3.3V-5V ≥400mA	1. The relationship between LED voltage drop and VLED power supply are as follows: 25mA application scenario: LED voltage drop Vf ≤ VLED voltage-0.35V. 50mA application scenario: LED voltage drop Vf ≤ VLED voltage-0.40V. 100mA application scenario: LED voltage drop Vf ≤ VLED voltage-0.50V. 200mA application scenario: LED voltage drop Vf ≤ VLED voltage-0.70V. 2. 4.5V power supply is recommended.

Note: If VLED is powered by the battery, evaluation on whether the voltage/current is able to meet the application requirements when the battery power is low should be implemented.

Cap sensor

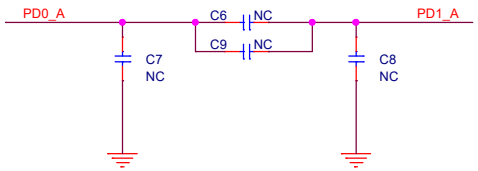

Disclaimer

Information contained in this document is intended for your convenience only and is subject to change without prior notice.
It is your responsibility to ensure its application complies with technical specifications.
Shenzhen Goodix Technology Co., Ltd. (hereafter referred to as "Goodix") makes no representation or guarantee for this information, express or implied, oral or written, statutory or otherwise, including but not limited to representation or guarantee for its application, quality, performance, merchantability or fitness for a particular purpose.
Goodix shall assume no responsibility for this information and relevant consequences arising out of the use of such information.
Under the protection of Goodix intellectual property rights, no license may be transferred implicitly or by any other means.

GOODIX 深圳市汇顶科技股份有限公司 Shenzhen Goodix Technology Co.,Ltd.

Size	Project Name	Rev
Custom	GH3036 Schematic	1.0

Date: Thursday, September 05, 2024 Sheet 1 of 1