Downloaded from SAE International by University of British Columbia, Sunday, September 23, 2018

LIBRARY

SOCIETY OF AUTOMOTIVE ENGINEERS, INC.
485 Lexington Avenue, New York, N. Y. 10017

# Effect of Variables on Surface Appearance of Fiberglass Reinforced Plastics

**Neil A. Carter**
Owens-Corning Fiberglas Corp.

SOCIETY OF AUTOMOTIVE ENGINEERS

**Automotive Engineering Congress**
**Detroit, Mich.**
**January 8-12, 1968**

680060

Downloaded from SAE International by University of British Columbia, Sunday, September 23, 2018

680060

# Effect of Variables on Surface Appearance of Fiberglass Reinforced Plastics

**Neil A. Carter**
Owens-Corning Fiberglas Corp.

THE SURFACE APPEARANCE of a reinforced plastic part is quite often a very significant characteristic. There are many theories regarding the effect of certain variables on the surface appearance of fiberglass reinforced plastics (FRP), but these theories are not dealt with in this report. The purpose of this report is to make you aware of the results of several experiments conducted in Owens-Corning Fiberglas Corp.'s Reinforced Plastics Laboratory. An explanation of the experiments, as well as the results, are reported.

In the Appendix is a glossary of terms, test procedures for surface appearance measurements, and pertinent photographs.

## RELATIONSHIP OF GLOSS-TO-MICROINCH FINISH-TO-LONG TERM WAVINESS

Because of confusion resulting from visual inspection of an FRP part, we decided to compare several materials on the basis of gloss, microinch finish, and long term waviness. Table 1 is a presentation of the data from this comparison. It is apparent that the material used to mold the part has a direct effect on the surface appearance. Notice also that all three properties are necessary to define the surface; none of the three properties can be directly related to the others. The fact that there are three separate surface characteristics is the explanation of why one person thinks a part looks better than another, while the next person thinks just the opposite. Some people look at gloss, others look at fiber pattern (microinch finish), while still others look at long term waviness.

## FIBROUS GLASS CONTENT VERSUS LONG TERM WAVINESS

Since the physical property requirements of FRP vary, we tested the effect of fibrous glass content on long term waviness. At about the same time we were concerned with the performance of heavy weight mat, so the two experiments were combined. All laminates except the one used as the experimental control were made with one ply of reinforcing mat. All laminates were molded using a conventional isophthalic polyester resin (Formula 1 in Appendix).

The important results of these experiments are:

1. In the reasonable range of fibrous glass contents, there is no significant difference in surface appearance. (See Table 2.)
2. When the fibrous glass content is very low, the long term waviness is very poor.
3. Another important point is that a heat treatment of 250 F for 45 minutes did not change the long term waviness.

ABSTRACT

Three surface characteristics: gloss, microinch finish (fiber pattern), and long term waviness, are discussed. Almost all variables have an effect on at least one of these characteristics. The main variables are molding temperature, cure time, glass type, glass content, filler type, filler content, resin, catalyst, surface mat, and post molded condition. The properties of the resin are most significant.

With proper selection of resin, filler, and glass, and using proper molding conditions, laminates with excellent surface appearance can be made.

Downloaded from SAE International by University of British Columbia, Sunday, September 23, 2018



Table 1 - Comparison of Three Surface Appearance Characteristics

| Material | Gloss 60 deg | Gloss 85 deg | Microinch* Finish | Long Term** Waviness Rating (Kralovec Scale) |
|---|---|---|---|---|
| Sheet Molding Compound (typical United States) | 61 | 78 | 650 | E |
| Sheet Molding Compound (typical European) | 67 | 82 | 360 | D |
| Low Profile Resin FRP Laminate | 23 | 69 | 250 | B+ |
| Typical Isophthalic FRP Laminate | 14 | 28 | 900 | C+ |

*Measured on "as molded" parts
**Measured on painted parts

Table 2 - Surface Appearance Versus Fibrous Glass Content

| Mat Weight per sq ft per Laminate, oz | No. of Plys | Microinch Finish | Long Term Waviness Rating: As Molded | Long Term Waviness Rating: After Post Cure of 45 Min. @ 250 F | Flexural Strength, psi × $10^3$ |
|---|---|---|---|---|---|
| 2 | 1-2 oz | 780 | D- | -- | 16 |
| 3.5 | 1-3.5 oz | 850 | C+ | C+ | 32 |
| 3.75 | 1-3.75 oz | 875 | C+ | C+ | 34 |
| 4 | 2-2 oz | 900 | C+ | C+ | 36 |
| 4 | 1-4 oz | 900 | B- | B- | 36 |
| 5 | 1-5 oz | 900 | B- | B- | 38 |

## SURFACING MAT WEIGHT VERSUS SURFACE APPEARANCE

Surfacing mat is used to minimize fiber prominence and to provide a sanding surface for prepaint dry sanding. Both microinch finish and long term waviness were measured on two different constructions. The test specimens were production laminates with only the weight of surfacing mat varied. The long term waviness was the same for both 0.030 in. surfacing mat and 0.015 in. surfacing mat. The microinch finish was only slightly affected. (See Table 3.)

Table 3 - Effect of Surfacing Mat Thickness on Surface Appearance

| Surfacing Mat, in. | Microinch Finish | Long Term Waviness Rating |
|---|---|---|
| 0.030 | 730 | C+ |
| 0.015 | 760 | C+ |

## USP 245* CATALYST VERSUS BPO CATALYST

A very short experiment was run to determine if USP 245 catalyst had any effect on the surface appearance of an FRP laminate. There was reason to suspect it might, since there were definite advantages to using USP 245 in the molding operation. There was no measurable difference in long term waviness, but the microinch finish was improved from 900 to 600 when going from BPO to USP 245 in our standard isophthalic formula (Formula 1). In further work with several resins, the microinch finish was improved, but not enough work has been done to report quantitatively.

*U. S. Peroxygen Corp., 2, 5 dimethylhexane - 2, 5 peroctoate

## EFFECT OF DRY SANDING

Dry sanding is used primarily to eliminate fiber pattern on the exterior surfaces that are to be painted. As would

Downloaded from SAE International by University of British Columbia, Sunday, September 23, 2018



Table 4 - Effect of Dry Sanding

| Laminate Type | Long Term Waviness Rating: No Sanding | Slight Degree of Dry Sanding | Excessive Degree of Dry Sanding |
|---|---|---|---|
| Isophthalic | Not applicable | C+ | C* |
| Low Profile | B | B+ | Not applicable |

*With improper sanding techniques, excessive degrees of dry sanding can cause more serious degradation of long term waviness than is indicated here

Table 5 - Summary of Bond Burn Study

| FRP Material | Bond Strip | Type Bond | Thickness of Adhesive, in. | Degree of Bond Burn* |
|---|---|---|---|---|
| Low Profile | FRP | Polyester | 0.010 | 2 |
| | | | 0.050 | 2 |
| | | Fast Cure Epoxy | 0.010 | 3 |
| | | | 0.050 | 2 |
| | | Urethane A | 0.010 | 1 |
| | | | 0.050 | 1 |
| | Steel | Polyester | 0.010 | 2 |
| | | | 0.050 | 3 |
| | | Fast Cure Epoxy | 0.010 | 2 |
| | | | 0.050 | 2 |
| | | Urethane A | 0.010 | 1 |
| | | | 0.050 | 1 |
| | | Urethane B | 0.010 | 2 |
| | | | 0.050 | 2 |
| Standard Isophthalic | FRP | Polyester | 0.010 | 2 |
| | | | 0.050 | 4 |
| | | Fast Cure Epoxy | 0.010 | 2 |
| | | | 0.050 | 3 |
| | | Urethane A | 0.010 | 1 |
| | | | 0.050 | 2 |
| | Steel | Polyester | 0.010 | 3 |
| | | | 0.050 | 4 |
| | | Fast Cure Epoxy | 0.010 | 2 |
| | | | 0.050 | 2 |
| | | Urethane A | 0.010 | 2 |
| | | | 0.050 | 2 |
| | | Urethane B | 0.010 | 2- |
| | | | 0.050 | 3 |

*Evaluated by visual inspection - 1 is excellent, 4 is bad.

be expected, the sanding can significantly reduce the surface roughness (microinch finish), but what happens to long term waviness? Since our test for LTW requires a smooth and shiny reflective surface, standard isophthalic panels cannot be tested without any dry sanding; so with this system it is a matter of comparing degrees of dry sand. Some of the newer resin systems (commonly called low profile resins) make laminates that can be painted to a shiny reflective surface without dry sanding. Our experiments were as follows:

1. Standard isophthalic laminates were dry sanded a very

Downloaded from SAE International by University of British Columbia, Sunday, September 23, 2018



minimum and others were dry sanded excessively. The laminates were then painted and tested for long term waviness.

2. Low profile laminates (see Formula 2 in Appendix) were painted with no sanding and others were painted after a slight degree of dry sanding.

The results of this experimentation are summarized in Table 4. With proper dry sanding there is no detrimental effect on surface appearance.

## EFFECT OF ADHESIVE BONDING (BOND BURN)

When a reinforcing structure is bonded to a surface part, there is often an image of the reinforcing structure transferred to the surface part. This image transfer is called "bond burn" and is frequently detrimental to the appearance of the part. As part of an extensive program on bonding, a study of bond burn was made. The test specimen for this work was a 12 in. × 18 in. flat sheet FRP panel with a bonding strip applied to the back side. The bond material thickness was controlled to 0.010 in. and 0.050 in. and several bond materials were evaluated. After the bond strip was applied, the specimens were painted by a typical painting sequence. The test specimens were evaluated by visual inspection and rated by degree of bond burn. Table 5 is a summary of the results of part of this study. Urethane "A" was the best adhesive tested as far as bond burn is concerned.

## MOLD IRREGULARITIES

It is very difficult to determine the effect of mold irregularities in an experiment because of the other variables. The mold can be tested for long term waviness by making an epoxy lay up on the surface in question, if the mold surface itself cannot be easily tested. Naturally any irregularities in the surface of the mold will end up in the part being molded. Even if the back side of the molded part has irregularities, it is probable that the front of the part will show some effect.

As for microinch finish and gloss, it is safe to say that the part will not be any better than the mold surface.

## SUMMARY AND CONCLUSIONS

The surface appearance of FRP can be affected by the influence of several variables. The type of resin used is probably the most important variable to consider. With proper selection of materials and good control of process variables, FRP parts can be made with excellent surface appearance.

## ACKNOWLEDGMENTS

R. J. Gelin for suggesting a method for testing LTW; W. M. Kralovec for developing a test for LTW and assistance in preparing the paper; and J. M. Maxel for his experimentation.

## APPENDIX A

### GLOSSARY OF TERMS

FRP - Abbreviation for Fiberglas* reinforced plastic. Refers to the family of materials that can be made by various combinations of thermosetting resin, fibrous glass reinforcement, fillers, and additives.

Microinch Finish - Surface roughness as measured by instrument such as the Microcorder (Mfg. by Micrometrical Div. of the Bendix Corp.). In FRP this is usually a measure of fiber prominence.

Long Term Waviness, LTW - Surface irregularities of larger period (nominally 3/4 in.) and varying depths (usually less than 0.002 in.) which are disagreeable primarily from an appearance standpoint.

Sheet Molding Compound - The resin, filler, additives, and so forth, are precombined to give a sheet form of molding compound. Normally the resin has been gelled so that the sheet can be handled.

Low Profile Resin - A new type of resin that blends a thermoset with a thermoplastic to give very low shrinkage in molding.

Isophthalic Polyester Resin - Typical polyester resin normally used for automotive applications.

Surfacing Mat - A filamentized mat that is normally very bulky and light weight. Its purpose is to impart a resin rich surface to a match die molded FRP part.

*T. M. O. C. F. C.

## APPENDIX B

Formula 1 - Standard Isophthalic

| | |
|---|---|
| Koplac #6101-25 (Koppers Co., Inc.) | 100 parts |
| Styrene Monomer | 5 parts |
| McNamee Clay Filler (Dixie Clay Co.) | 70 parts |
| Zelac UN (E. I. DuPont de Nemours Co.) | 0.52 parts |
| Mapico Black Pigment (Columbia Carbon) | 0.75 parts |
| BPO | 1.05 parts |

Formula 2 - Low Profile

| | |
|---|---|
| Paraplex P340 (Rohm and Haas Co.) | 100 parts |
| Paraplex P674 | 56 parts |
| ASP 400 Clay Filler (Minerals and Chemicals Philipp Corp.) | 104 parts |
| Zelac UN (E. I. DuPont de Nemours Co.) | 0.80 parts |
| TBO | 1.60 parts |

Downloaded from SAE International by University of British Columbia, Sunday, September 23, 2018



APPENDIX C

LONG TERM WAVINESS TEST

TEST SET UP - The test setup developed for the optical system appears in Figs. 1 and 3. It is composed of a fluorescent light bank, a simple grid pattern, a reflecting surface, and a camera. The position of the light bank, panel, and camera are fixed with respect to each other to insure reproducibility.

The fluorescent light bank is used to project the grid pattern on the reflecting surface. The grid pattern presently being used is composed of 3/4 in. wide horizontal lines on 1-3/4 in. centers and 3/32 in. wide vertical lines on 1/2 in. centers. (See Fig. 2)

The part to be evaluated is used as a reflecting surface similar to a mirror. Since the surface of the part being tested

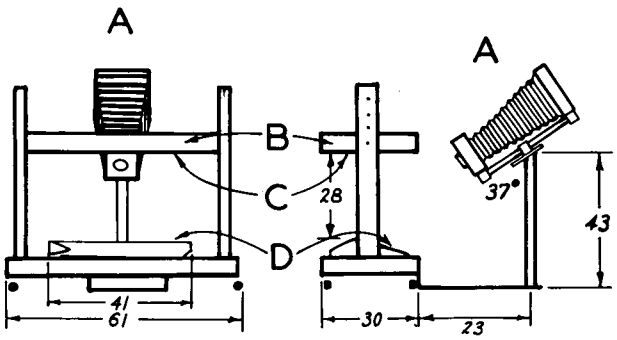


A-CALUMET 4X5 VIEW CAMERA MODEL CC-400

B-FLUORESCENT LIGHT BANK

C-GRID (SEE FIG. 2)

D-CORVETTE DOOR PANEL

Fig. 1 - Schematic of LTW test set-up

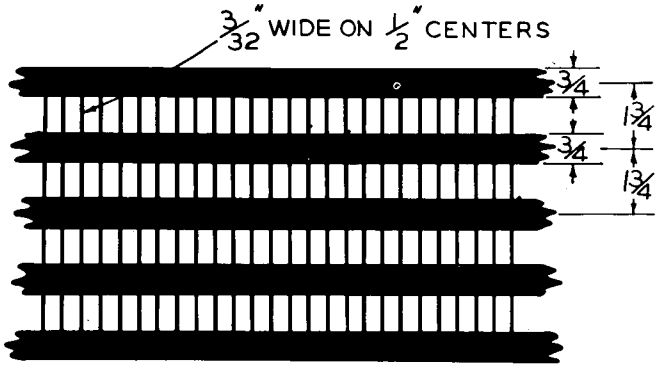


Fig. 2 - Dimensions of grid on diffuser panel for LTW test set-up

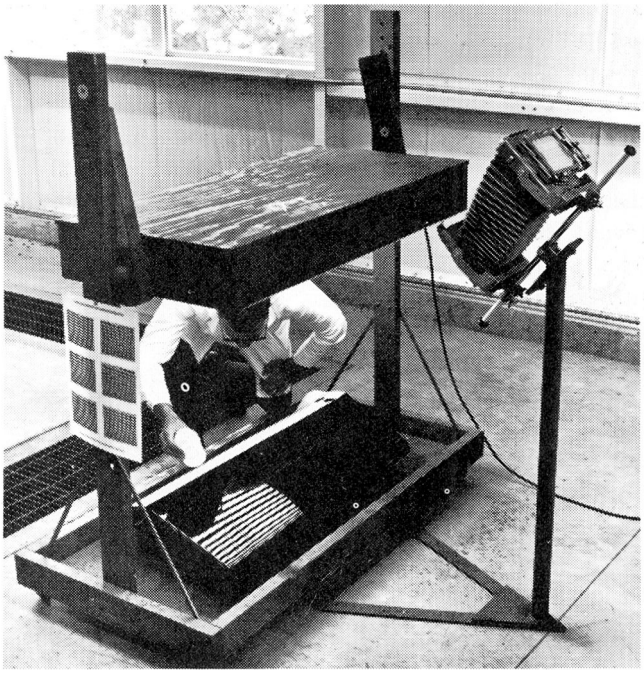

Fig. 3 - LTW set-up

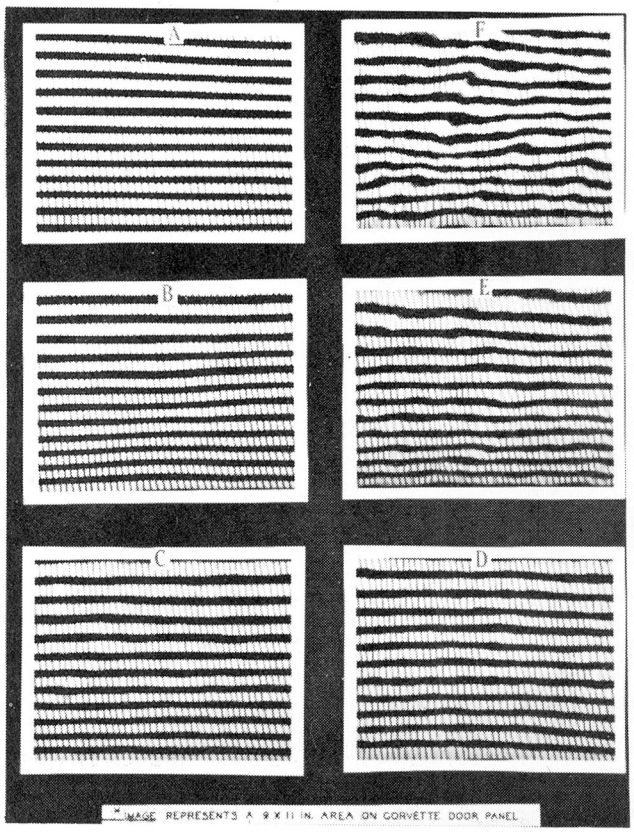


Fig. 4 - Kralovec scale for ranking LTW

Downloaded from SAE International by University of British Columbia, Sunday, September 23, 2018



is usually not planar, the reflected image will be distorted. The distortion will be caused by the combined effect of the overall panel contour and the superimposed long term waviness (LTW). The camera is used for recording the reflected image for both permanent record and direct evaluation. The camera is a Calumet 4 × 5 view camera Model CC-400 with a Calumet No. L-115 lens (12 in. 305 mm F:6.3).

PANEL PREPARATION - Panels are normally prepared in the finishing sequence for FRP which is 100% dry sand, prime, (oven cured), wet sand of prime, and an oven dry color coat. The 100% dry sand is omitted on those formulations with negligible fiber pattern.

TEST PROCEDURE - The panel to be evaluated is mounted in the rigid fixture below the fluorescent light banks. The shutter speed and aperture opening is set at 1/5 sec and F:16 when using Polapan Type 52 film. The picture is taken, and the sample number and date are recorded on it.

EVALUATION - A standard set of photographs has been prepared which represent varying degrees of surface waviness. (See Fig. 4.)

The evaluation is made by comparing the photograph of a panel's reflected image with any of the standard set of photographs. The ranking is also given either a plus or minus depending upon its deviation from a standard waviness level.

This paper is subject to revision. Statements and opinions advanced in papers or discussion are the author's and are his responsibility, not the Society's; however, the paper has been edited by SAE for uniform styling and format. Discussion will be printed with the paper if it is published in SAE Transactions. For permission to publish this paper in full or in part, contact the SAE Publications Division and the authors.

Society of Automotive Engineers, Inc.

8 page booklet. Printed in U.S.A.