ARTICLE IN PRESS

Optical Materials xxx (2013) xxx–xxx

Contents lists available at SciVerse ScienceDirect

Optical Materials

journal homepage: www.elsevier.com/locate/optmat

Keto-enol tautomerism and nonlinear optical properties in β-diketones containing [2.2]paracyclophane

Elena V. Sergeeva [a], Lada N. Puntus [a,b,*], Francois Kajzar [c,d,*], Ileana Rau [c], Bouchta Sahraoui [d], Irina S. Pekareva [b], Kyrill Yu. Suponitsky [a], Ivan S. Bushmarinov [a], Konstantin A. Lyssenko [a]

[a] Russian Academy of Sciences, A.N. Nesmeyanov Institute of Organoelement Compounds, 28 Vavilova str., 119991 Moscow, Russia
[b] Kotel'nikov Institute of Radioengineering and Electronics, Russian Academy of Sciences, 11-7 Mokhovaya str., 125009 Moscow, Russia
[c] Faculty of Chemistry and Materials Science, Politehnica University of Bucharest, Polizu str. 1, Bucharest, Romania
[d] Lunam Université, Université d'Angers, CNRS UMR 6200, Laboratoire Moltech-Anjou, 2 bd Lavoisier, 49045 Angers cedex, France

ARTICLE INFO

Article history:
Available online xxxx

Keywords:
[2.2]Paracyclophane
β-Diketone
Keto-enol tautomerism
NLO
SHG
Molecular hyperpolarizability calculations

ABSTRACT

Nonlinear optical properties of [2.2]paracyclophane (pCp) derived β-diketones containing functional groups with different donor–acceptor properties, bounded to the dicarbonyl fragment, have been studied. Two polymorphic modifications, one of which is characterized by the polar space group $Pca2_1$ while the other one is centrosymmetric (space group *Pbca*) were obtained for β-diketone substituted by thiophene group depending on the crystal growth procedure. All molecules studied exhibit second harmonic generation ability, the efficiency of which was measured by the powder technique at 1064 nm fundamental wavelength. The NLO susceptibility for the compounds studied is analyzed taking into account the structural peculiarities and theoretical calculations.

© 2013 Elsevier B.V. All rights reserved.

1. Introduction

In the search for effective materials for application in devices exploiting second-order nonlinear optical (NLO) materials organic molecules have appeared to be very interesting candidates (for a historical review see Kajzar and Zyss [1]). These materials exhibit large first and second hyperpolarizabilities, are versatile and can be optimized on molecular (molecular engineering) and macroscopic (material engineering) levels.

In this work we present the results of the investigation of the second-order NLO properties of a series of β-diketones substituted by functional groups with different donor–acceptor properties and exhibiting a spatial charge transfer [2]. Objects of this research, namely: ([2.2]paracyclophane derived β-diketones 1-([2.2]paracyclophane-4-yl)-3-phenylpropane-1,3-dione (PPPD, **1**), 1-([2.2]paracyclophane-4-yl)butane-1,3-dione (PBD, **2**), 4,4,4-trifluoro-1-([2.2]paracyclophane-4-yl)butane-1,3-dione (TFPBD, **3**) and 1-([2.2]paracyclophane-4-yl)-3-(thiophene-2-yl)propane-1,3-dione (THPBD, **4**) are presented in the Scheme 1.

2. Experimental part

2.1. Synthesis of β-diketones

β-Diketones PPPD **1**, PBD **2** [3], TFPBD **3** and THPBD **4** were obtained as described for PPPD [4] via Claisen condensation of 4-acetyl[2.2]paracyclophane with methyl benzoate, ethyl acetate, ethyl trifluoroacetate and ethyl 2-thiopheneecarboxylate, respectively, in the presence of NaH as a base in DMSO [5]. Analytical data are in a good agreement with with calculated values for all β-diketones.

2.2. Single crystal X-ray analysis

The single crystals of PPPD were obtained by crystallization of this β-diketone from EtOH. Depending on the crystal growth procedure the THPBD could crystallize in two polymorphic forms. The single crystals THPBD-I were obtained by crystallization of the β-diketone from pentane, while the single crystals of THPBD-II were grown by slow evaporation method from the aq. EtOH solution containing the europium chloride and THPBD. The samples for SHG measurements were grown by the method similar to THPBD-I.

The data collections for all crystals were carried out at the Bruker SMART APEX2 CCD diffractometer [λ(Mo Kα) = 0.71072 Å, ω-scans]. The structures were solved by direct method and refined by the full-matrix least-squares technique against F^2 in the

* Corresponding authors. Addresses: Russian Academy of Sciences, A.N. Nesmeyanov Institute of Organoelement Compounds, 28 Vavilova str., 119991 Moscow, Russia (L.N. Puntus), Faculty of Chemistry and Materials Science, Politehnica University of Bucharest, Polizu str. 1, Bucharest, Romania (F. Kajzar).

E-mail addresses: ladapuntus@gmail.com (L.N. Puntus), frkajzar@yahoo.com (F. Kajzar).

0925-3467/$ - see front matter © 2013 Elsevier B.V. All rights reserved.
http://dx.doi.org/10.1016/j.optmat.2013.05.018

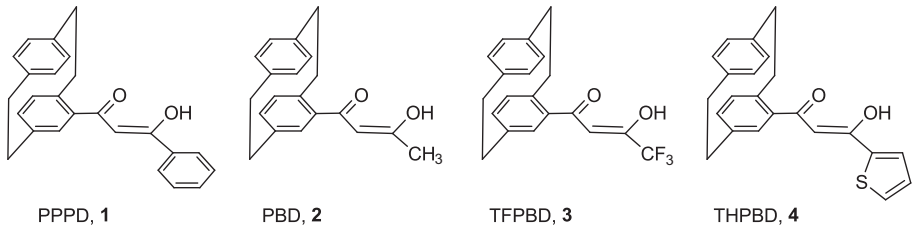

Scheme 1. Chemical structures of studied molecules **1**–**4**.

Table 1
Crystal data and structure refinement parameters.

Compound	PPPD	THPBD-I	THPBD-II
Formula	$C_{25}H_{22}O_2$	$C_{23}H_{20}O_2S$	$C_{23}H_{20}O_2S$
Fw	354.43	360.45	360.45
T	100	100	100
Cryst syst	Orthorhombic	Orthorhombic	Orthorhombic
Space group	$Pca2_1$	$Pca2_1$	$Pbca$
a (Å)	7.4846(6)	7.5231(8)	13.9261(8)
b (Å)	11.3092(9)	11.2928(12)	12.7262(7)
c (Å)	20.7711(16)	20.516(2)	19.8767(11)
V (Å^3)	1758.2(2)	1742.9(3)	3522.7(3)
Z(Z′)	4(1)	4(1)	8(1)
Mu	0.83	2.01	1.98
$F(000)$	752	760	1520
D_{calcd} (g cm^{-1})	1.339	1.374	1.359
$2\theta_{max}$ < (deg)	58	56	58
Reflns measured	9890	16763	40809
Undependent reflns [R_{int}]	2402 [0.0390]	4181 [0.0499]	4681 [0.0519]
Obsd reflns [$I > 2\sigma(I)$]	2192	3505	3665
Final $R(F_{hkl})$: R_1	0.0378	0.0468	0.0452
$wR2$	0.0955	0.1279	0.1421
GOF	1.020	0.968	1.053
$\Delta\rho_{max}/\Delta\rho_{min}$ (e·Å^{-3})	0.274/−0.235	0.428/−0.189	0.635/−0.509

anisotropic–isotropic approximation. The hydrogen atom in the O—H···O bridge for all three structures was located using the Fourier synthesis of electron density and refined in the isotropic approximation while all other hydrogens were placed in calculated positions and refined in the riding model. All calculations were carried out using the SHELXTL software [6]. The crystallographic data and refinement details are listed in Table 1. The analysis of the Fourier electron density synthesis in THPBD-I have revealed the presence of disorder – the superposition of two orientations of thiophene ring with respect to the keto-enol ring with the occupancies for *s-cis* and *s-trans* conformers equal to 0.85 and 0.15, respectively. The atoms of thiopene ring for minor position were refined with DFIX constraints on C—C and C—S bond lengths (Fig. S1).

2.3. Powder X-ray measurements

Because of polymorphism of THPBD and taking into account that nonlinear properties can be observed only for non-centrosymmetric samples, we have carried out powder X-ray study to ensure that samples used for SHG consist of pure non-centrosymmetric form. The powder patterns for THPBD-I and THPBD-II were obtained in transmission mode, with the studied compounds deposited on sticky tape (providing the wide halo in the range of 10–30° 2θ). The measurements were performed on a Bruker D8 Advance diffractometer (Vario geometry) equipped with a Kα_1 Ge(1 1 1) focusing monochromator and a LynxEye 1D position-sensitive detector. The measurement range was 6–60° 2θ, with step size of 0.02° 2θ [7]. The modeling of powder patterns performed in TOPAS 4.2 [7] using the known crystal structures has shown that THPBD_I and II consist of pure non-centrosymmetric and centrosymmetric polymorphs, respectively (Figs. S2, S3).

2.4. Computational details

All the calculations were carried out with the GAUSSIAN09 program [8]. Based on our recent studies [9,10] M052X/6-31 + G(d) approximation was used throughout this work. For the considered molecules the geometry optimization followed by calculation of the first hyperpolarizability (β) were carried out. The latter was estimated as negative third derivative of the energy with respect to the applied electric field and reported as vectorial part

$$\beta_{vect} = (\beta_x^2 + \beta_y^2 + \beta_z^2)^{1/2}, \quad \text{where } \beta_j = \frac{1}{3}\sum_{i=1}^{3}(\beta_{jii} + \beta_{iji} + \beta_{iij}), \quad i,j = x,y,z. \tag{1}$$

2.5. Powder second harmonic generation measurements

The second order NLO properties of the studied molecules were determined by the powder optical second harmonic generation technique, introduced originally by Kurtz and Perry [11]. It is a relatively simple technique which allows a relative comparison of NLO properties of materials, provided that molecules crystallize in a noncentrosymmetric reference frame. The NLO susceptibilities were calculated taking account of small differences in the sample mass as well the used fundamental beam attenuation filters.

The experimental arrangement used is shown schematically in Fig. 1. The infrared light source is a pulsed Q switched Neodymium doped Yttrium Aluminium Garnet (Nd:YAG) laser (Quantel, model Brillant B), operating at 1064 nm fundamental wavelength with 5 ns pulse duration and 10 Hz operating rate. The optical absorption cutoff for the studied molecules is of 400 nm [5] and so both fundamental (1064 nm) and harmonic (532 nm) waves are in the transparency range. For SHG measurements a small amount of powder (*ca* 3 mg) is pressed between two glass slides and sealed. The sample is illuminated with the IR beam with diameter

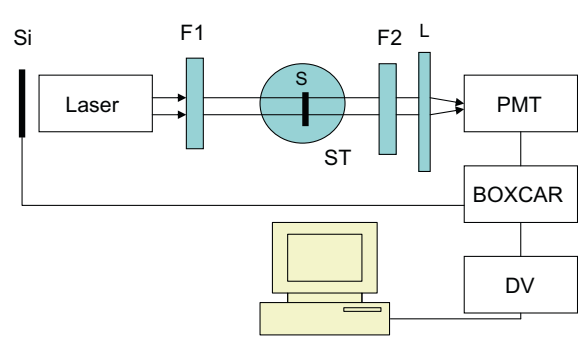

Fig. 1. Schematic representation of the experimental set-up for powder second harmonic generation measurements. F1 and F2 are filters, L is a slightly focusing lens and DV is digital voltmeter, S is sample and ST is the sample stage.

(9 mm), larger than the sample diameter (7 mm). The initial laser power was diminished by using neutral density filters. So in the experiments the power density on sample was of 33 MW/cm^2 for molecules with the lowest quadratic susceptibility (PBD (**2**), TFPBD (**3**), THPBD-I (**4**)) and about 10 times lower for NPP and PPPD (**1**). This power densities are several orders of magnitude below the dielectric breakdown for organic molecules (>GW cm^2 for ns pulses). As all studied molecules are transparent at fundamental wavelength no light absorption was present which would cause a significant thermoheating of studied samples.

The measured SHG intensity was averaged for a few hundreds of laser pulses. The SHG intensity is calibrated with the similar measurements on a standard, done at the same conditions. As standard the molecule NPP (N-(4-nitrophenyl)-(L)-prolinol), characterized for its second order NLO properties by electric field induced optical second harmonic generation (EFISH) and by third harmonic generation (THG) as well as by theoretical calculations by finite-field perturbational approach [12]. The use of unfocused large diameter beam allows measuring the SHG intensity from the whole sample volume. It decreases also the light scattering by crystallites. The SHG intensities were corrected for the small mass differences in used samples.

3. Results and discussion

3.1. Second order nonlinear optical properties

The linear optical properties of [2.2]paracyclophane-derived β-diketones have been analyzed previously [5] and the absorption λ_{max} of compounds **1, 2, 3** and **4** is ~355, 317, 350 and 367 nm, respectively. The results obtained for second order NLO properties are given in Table 2. The second column shows the measured SHG intensities, uncorrected for used attenuation filters and for small mass differences. The two values for NPP powder, measured in few months interval, show a very good stability of the experimental set up. The second-order NLO susceptibilities were calculated taking account of small differences in the sample mass as well the used fundamental beam attenuation filters. As already mentioned the studied molecules do not absorb at fundamental and nor at harmonic wavelength. So no absorption losses are present. The only ones originating from light scattering are difficult to measure and they are assumed in this technique to be roughly in the powder material used for calibration, i.e. NPP in our case, as the SHG measurements are done at the same conditions.

The $<\chi^{(2)}(-2\omega;\omega,\omega)>$ values are average over all crystallites orientations. From Table 2 one can see that the averaged quadratic susceptibility of **1** compound (PPPD) is the highest one and is the same order of magnitude as that of NPP, being a little smaller. In the case of compounds **2–4** the averaged quadratic susceptibility is quite similar and relatively low. To understand the values obtained we have performed both a detailed analysis of X-ray data and theoretical calculation of hyperpolarizability for the compounds **1–4**.

Table 2
SHG intensity and the relative values (with respect to NPP $<\chi^{(2)}_{NPP}(-2\omega;\omega,\omega)>$) of quadratic susceptibilities for the studied compounds.

Compound	SHG intensity (arb. units)	$<\chi^{(2)}_{compound}(-2\omega;\omega,\omega)>$ / $<\chi^{(2)}_{NPP}(-2\omega;\omega,\omega)>$
NPP	1902[a]	1[a]
PPPD (**1**)	95	0.22
PBD (**2**)	81	0.009
TFPBD (**3**)	41	0.013
THPBD-I (**4**)	58	0.014
NPP	1860	1[a]

The SHG intensities are not normalized to small differences in mass as well as for attenuation filters.
[a] Used as standard. Values for studied compounds are relative to $<\chi^{(2)}(-2\omega;\omega,\omega)>$ for NPP.

3.2. Molecular and crystal structures

Only for two compounds (PPPD and THPBD) out of four considered in this study, the single crystals of suitable quality were obtained and their structures were characterized by the X-ray diffraction. According to X-ray diffraction data (XRD), the racemic PPPD crystallizes in noncentrosymmetric space group *Pca2*$_1$ (Z = 4, Z′ = 1) that is important for the design of molecules appropriate for 2nd order NLO materials. The bond lengths in pCp core are rather close to those observed in isolated pCp (Fig. 2) [13]. At the same time the presence of the β-diketone moiety leads to some elongation of the C(4)—C(5) bond (1.401(3) Å) in comparison to those in the unsubtituted ring (av. 1.392 Å of pCp ring). Both rings are characterized by the boat conformation with the deviation of the C(3), C(6) and C(11), C(14) atoms by 0.14 and 0.18 Å, respectively. The twist angle (pseudotorsion angle C(1)—C(2)—C(9)—C(10)) is equal to 9.9°. In its turn, the bond length distribution and the strength of the intramolecular H-bond are almost identical to those in dibenzoylmethane [14]. The hydrogen bond is asymmetric with the H(2O) atom located in the vicinity of the O(2) attached to the phenyl ring. The O(1)···O(2) separation, which can serve as a measure of the O—H···O bonds strength in PPPD is 2.449(2) Å (in dibenzoylmethane it is 2.460(2) Å).

Analysis of crystal packing (Fig. 3) revealed that all intermolecular contacts such as the H···H and H···C correspond to normally observed van-der-Waals interactions.

As it was mentioned above, two polymorphic modifications, one of which is characterized by the polar space group *Pca2*$_1$ (THPBD-I) while the other one is centrosymmetric (space group *Pbca*) (THPBD-II) were obtained for THPBD (see experimental details, Table 1). The estimation of the relative energy of two polymorphs was carried out upon the using of the empirical "UNI" pair potential parameters [15] by means of the Mercury 2.4 program package. It appears that packing energies for THPBD-II and THPBD-I are −178.18 and −184.66 kJ/mol, respectively, indicating that THPBD-I is thermodynamically more stable. Taking into account that interatomic interactions correspond to the weak Van-der-Walls interactions in both polymorphs [16] this result well coincides with higher density of THPBD-I (Table 1).

It should be also noted that PPPD and THPBD-I not only crystallize in the same space group but also characterized by nearly the same unit cell dimensions (Table 1). Therefore one expects the role of crystal packing i.e. the polarity of the medium as well as influence of any specific intermolecular interactions in these systems to be merely equal or at least quite close. As the consequence it was reasonable to propose that the variation observed of crystal nonlinear susceptibility can be explained by some intrinsic features of molecules.

If one considered solely the pCp fragment the PPPD and both polymorphic modifications of THPBD are nearly identical (Table 3). Furthermore, based on the C(4)—C(17) bond length (1.480(1)–1.481(3) Å) and torsion angle (C(3)C(4)C(17)O(1)) (36.3–38.6°) values one can propose that the degree of conjugation of [2.2]paracyclophane with central keto-enol cycle is also nearly the same. The same is true for the geometric parameters that formally characterize the conjugation of thiophene and keto-enol moieties with the only principle difference that is observed for mutual disposition of the S(1) atom in respect to the oxygen atoms of the keto-enol cycle. In THPBD-II the S(1) is located in *cis* position, while in THPBD-I there is the superposition of the s-*cis* and s-*trans* conformers in the ratio of 85÷15.

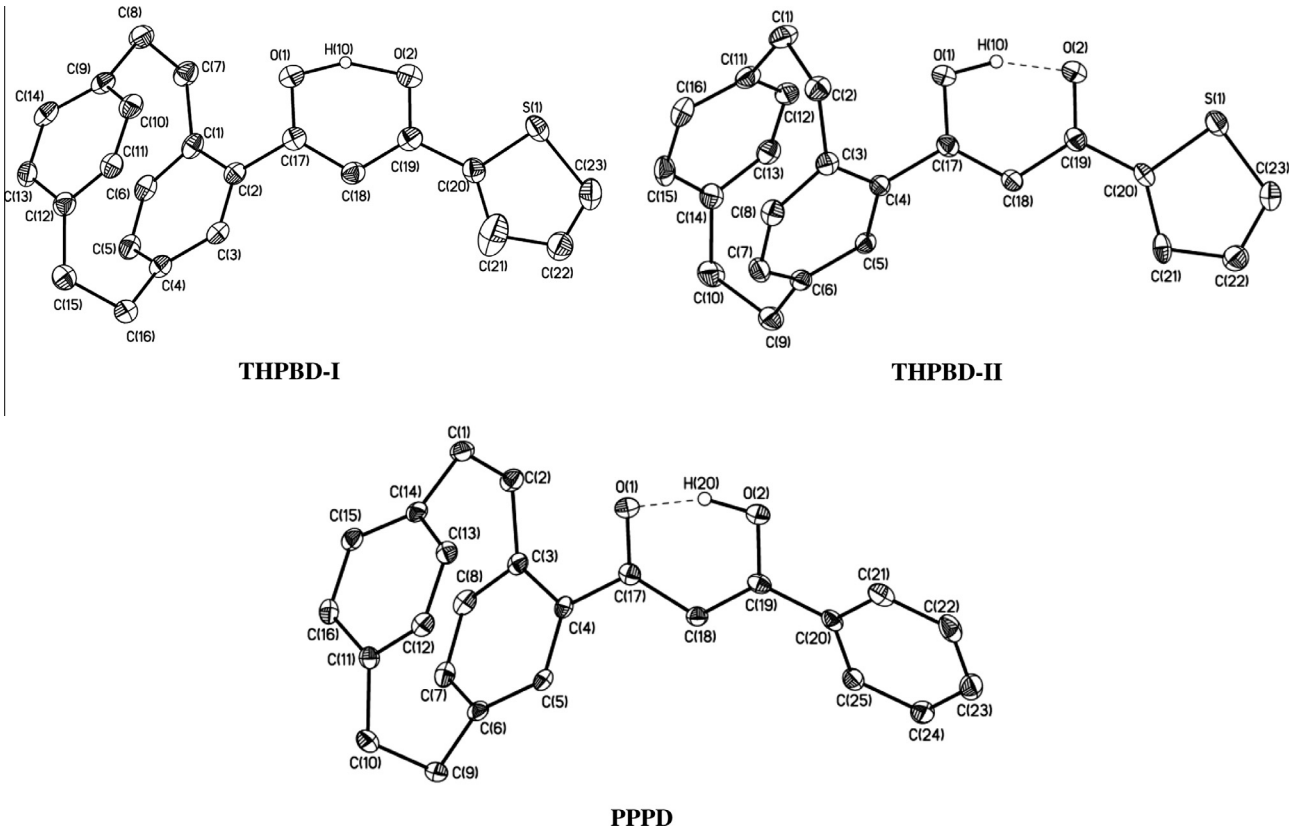

Fig. 2. The general view of THPBD-I, THPBD-II and PPPD in the representation of atoms by thermal ellipsoids (p = 50%). The disorder in THPBD-I is omitted for clarity.

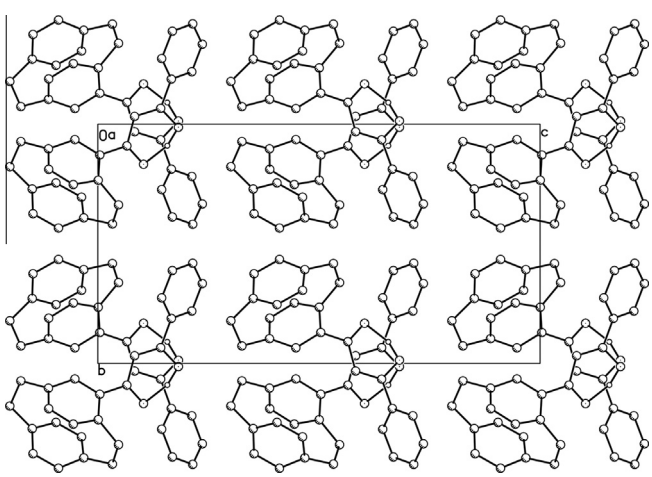

Fig. 3. Fragment of crystal packing illustrating the arrangement of molecules along polar axis 2_1 in the crystal of PPPD.

Table 3
Selected bond length (**Å**) and torsion angles (°) according to X-ray diffraction analysis.

Bond lengths and angles	PPPD	THPBD-I	THPBD-II
C(4)—C(17)	1.480(3)	1.481(3)	1.483(3)
C(3)C(4)C(17)O(1)	36.3	37.2	38.6
C(19)—C(20)	1.476(3)	1.460(3)	1.465(3)
O(2)C(19)C(20)C(21)	24.7(1)	12.9(1)	6.1(1)
O(1)—C(17)	1.265(3)	1.285(3)	1.319(2)
O(2)—C(19)	1.324(3)	1.296(3)	1.266(2)
C(17)—(C18)	1.439(3)	1.404(3)	1.385(2)
C(18)—C(19)	1.375(3)	1.395(3)	1.431(2)
C(4)—C(5)	1.402(3)	1.397(3)	1.403(2)
C(7)—C(8)	1.386(3)	1.387(3)	1.384(2)
C(5)—C(6)	1.393(3)	1.393(3)	1.395(2)
C(6)—C(7)	1.397(3)	1.393(3)	1.396(2)
C(4)—C(3)	1.416(3)	1.410(3)	1.415(2)
Intramolecular H—bond			
O(1)···O(2)	2.460(3)	2.473	2.488
O(1)H	1.49(1)	1.18(1)	1.09(1)
O(2)H	1.02(1)	1.36(1)	1.45(1)

In contrast to pCp fragment the bond length distribution in the keto-enol fragment for two polymorphs of THPBD is significantly different. It is well-known that in keto-enols due to the formation of strong intramolecular hydrogen O—H···O bond the π-density in the O=C—C=C—OH fragment is delocalized. From structural point of view this delocalization is manifested in the proximity of formally single C—C and double C=C bond lengths as well as C—O and C=O bond lengths in hydrogen-bonded 6-membered cycle. As the measure of such delocalization it was proposed to use the difference d_1-d_2=d_{cc} and d_4—d_3=d_{co} (Scheme 2) as well as their sum (Q value) [17]. The Q value is clearly interconnected with the O···O separation (i.e. the parameter reflecting the O—H···O bond strength) as well as with the electronic and steric parameters of the substituents in keto-enol cycle. Taking this in mind, it was reasonable to suggest that Q value in two polymorphs of THPBD as well as in PPPD would be comparable, in spite of differences mentioned above. Indeed the O···O separations in PPPD and in two polymorphs of THPBD are rather close (see Table 3). Furthermore the shortest O···O separation is observed in PPPD therefore one can expect the most pronounced delocalization in the latter. In contrast the Q value attains its minimum for THPBD_1 (0.02 Å) while in PPPD (0.123(3) Å) and THPBD-II (0.099(3) Å) it is merely equal. This finding assuming that PPPD and THPBD-I are isostructural is unlikely to be interconnected with the crystal packing effects and is likely to be the consequence of superposition of two

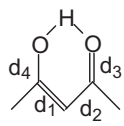

Scheme 2. Hydrogen-bonded 6-membered cycle in keto-enols.

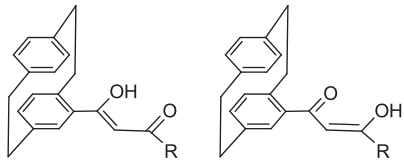

enol-keton (EK) **keton-enol (KE)**

Scheme 3. General view of two tautomeric forms.

tautomers. The additional indication to the presence of such disorder comes from the position of hydrogen atom in the O—H···O bridge. In THPBD-II and PPPD the hydrogen bond is significantly asymmetrical with hydrogen atom located near the atom O(1) and O(2) respectively, while in THPBD-I the H(1O) is located almost in the middle of O-H···O bridge. In such way PPPD and THPBD-II correspond to the different types of tautomers, while in THPBD-I the superposition of two tautomers is realized. It should be noted that such type of disorder is well-known for various keto-enols [18] and can persist even at extremely low temperatures [19].

Assuming that PPPD and THPBD in solid differ only by the type of tautomer and/or the presence of tautomers equilibrium in the latter the study of the degree of delocalization and hyperpolarizability values as the function of tautomer type were undertaken.

3.3. Theoretical calculations

Two tautomer forms enol-keton (EK) and keton-enol (KE) are possible in the all compounds considered (Scheme 3). According to M052X/6-31 + G(d) calculations for all compounds, the difference in tautomer energy is nearly absent. The maximum difference is observed for PPPD where KE form (which is observed in its crystal structure) is more stable by only ~1 kkcal/mol while for all the other compounds, the same difference varies in the range of 0.02–0.7 kcal/mol. It is rather reasonable to suggest that both tautomers for all considered compounds can in general coexist in the solid state, and as a consequence, one would always measure a response from a superposition of both forms. To some extent, this finding is in an agreement with the presence of tautomer superposition in THPBD-I even at 100 K.

Taking into account that the degree of delocalization plays the decisive role in the hyperpolarizibility of compounds the geometric parameters d_{cc}, d_{co}, Q were summarized in Table 4 along with values of β and ΔE. Concerning the molecular geometry, two keto-enol tautomers in general are characterized by slightly different bond length distribution. Despite of proximity of energy of tautomers the O···O separation as well as d_{cc}, d_{co} and Q values for them are significantly different. Furthermore one can see that the lower energy of tautomer not always coincide with higher degree of delocalization and/or stronger intramolecular H-bond. Indeed in all compounds the pCp—C bond length in **EK** is systematically shorter (1.471–1.476 A) that in **KE** (1.483–1.486 A). The same is true for Ph and thiophene groups in PPPD and THPBD for which the C—C bonds in tautomer **KE** were shorter that those in **EK**. Thus for two groups which can formally participate in conjugation with keto-enol cycle the degree of conjugation will be more pronounced for group attached from "enol side". Furthermore this degree of conjugation is reflected in an increase of β value that is clearly

Table 4
The relative energy (ΔE, kcal/mol), selected bond lengths and parameters of intramolecular H-bond (**Å**) as well as hyperpolarizabilities (au) for the studied compounds according to M052X/6-31 + G(d) calculations.

	PPPD		PBD		TFPBD		THPBD	
	EK	KE	EK	KE	EK	KE	EK	KE
O···O	2.5	2.527	2.543	2.529	2.589	2.54	2.523	2.521
d_{cc}[a]	0.061	0.07	0.07	0.079	0.046	0.11	0.06	0.069
Dco	0.071	0.074	0.083	0.074	0.09	0.075	0.074	0.073
Q	0.132	0.144	0.153	0.153	0.136	0.185	0.134	0.142
ΔE[b]		−0.964		−0.346			−0.0283	
pCp—C	1.476	1.487	1.476		1.471	1.483	1.475	1.486
R—C[c]	1.493	1.478					1.469	1.457
β	1052	643	573	56	729	97	971	1025

[a] For the definition of d_{cc} and d_{co} values see Scheme 3.
[b] The relative energy difference for tautomers was calculated with the account of zero-potential energy.
[c] R—C corresponds to Ph—C bond in the case of PPPD and thiophene ring for THPBD.

observed upon the comparison of **KE** and **EK** tautomers for PBD and TFPBD. In both molecules tautomer **EK** is characterize by higher β value (~ in 10 times) indicating that pCp—C—C=C—C=O chain plays the main role in the determination of β value.

In addition to the "route of conjugation" the hyperpolarizability trends are undoubtedly determined by electron donating/withdrawing features of the substituents. Central keto-enol fragment can be considered as Donor(OH)-π-system(C=CH—C)-Acceptor(=O) system. Indeed in the malonaldehyde, the charges obtained by us by means of the integration of atomic basins within the Baders "Atoms in Molecules" theory for carbon atoms attached to OH and =O groups are equal to 0.64 and 0.97e, respectively. In the **EK** form of PBD, keto-enol is connected to pCp (which is characterized by π-electron-donating properties) by its donor end, and pCp can be considered as auxiliary donor [20] which leads to increase of β. In the **KE** form, keto-enol is connected to pCp by acceptor carbonyl group which loses its acceptor ability thereby leading to a significant decrease of its withdrawing effect. Exchange of methyl substituent with the trifluoromethyl doesn't lead to sizable changes in β in the comparison to PBD. Increase of β for the **EK** form is explained by acceptor properties of the CF_3 group which acts as auxiliary acceptor for the carbonyl group. Increase of β for the **KE** form again is explained by acceptor ability of the CF_3 group which is, in this case, directly connected to hydroxy group. When tautomer **KE** is excited by the electric field, some portion of electron density is transferred from the OH- to CF_3-group thereby resulting in increase of β.

In the case of phenyl- and thiophene-containing molecules (PPPD and THPBD), difference in the β's for tautomers is less pronounced. This is due to interplay of two simultaneous effects. The first one is related to D/A properties of aromatic cycles: Ph group is very weak π-donor while thiophene is strong π-donor. The second effect is the elongation of overall π-conjugation system. Increase of β for both forms in PPPD is probably related to the latter effect while results obtained for THPBD are due to contribution of both effects.

The qualitative correlation between nonlinear crystal susceptibility χ values obtained from Kurts powder measurements and calculated β_{vect} values for PPPD, PBD and TFPBD is observed. However experimental quite low susceptibility for THPBD does not agree with molecular properties. One can suggest that the disorder observed for THPBD-I in its crystal structure might be responsible for the low value of $\chi^{(2)}$. The low barrier of proton transfer between two oxygen atoms makes π-system of the keto-enol fragment in THPBD-I to emulate "fully delocalized" one in the time scale of hyperpolarizability measurement [18]. On the other side the

correlation between d_{cc} and β values (Table 3) is closely resemble the correlation between β and bond length alternation (BLA) for polyenes [21]. It was shown that upon decrease of BLA (that is in fact d_{cc} value in our case) hyperpolarizability is increased then reach maximum, and after that become zero when BLA is equal to zero (which correspond to full delocalization of the π-system: the lengths of formally double bonds become equal to the lengths of formally single bonds).

Assuming that unexpected low value of χ for THPBD-I cannot be explained either by intrinsic features of molecular structure, crystal packing effects or polymorphism phenomenon it is most likely that the main reason of the χ reduction – effective equalization of C—C bonds in keto-enol ring caused by dynamic disorder in the THPBD-I crystal.

4. Conclusions

Four new representatives of [2.2]paracyclophane-derived β-diketones with different donor–acceptor groups were synthesized and characterized by X-ray crystallography, powder SHG study and quantum chemical calculations. All compounds were obtained as racemates however the presence of SHG activity ensures their noncentrosymmetric structure. For PPPD and THPBD-I it was confirmed by single crystal X-ray investigation. The observed tendency to crystallize in noncentrosymmetric space groups (even being racemates) makes this family of substituted paracylophanes to be promising candidates for potential nonlinear optical applications. Further optimization of the molecules of this family is possible by using stronger donating and accepting groups.

The powder SHG measurements show that the measured average second order NLO susceptibility for studied compounds follows well the theoretical calculation except for PPPD. These results were analyzed and higher average susceptibility for PPPD was explained by the presence of dynamic disorder of the keto-enol fragment. At the same time, keto-enol equilibrium (or in other words the asymmetry of the intramolecular H-bond potential) can be tuned, at least in part, by pecularities of supramolecular organization in the solid state [18] that can be regarded as an additional way to modify NLO properties of a crystal.

Acknowledgments

Lada N. Puntus and Konstantin A. Lyssenko are grateful to Russian Foundation for Basic Research for the financial support (Grant Nos. 14-03-91165, 12-03-00612, 13-03-33107, 13-03-01041) and by the Council on Grants at the President of Russian Federation (Program for State Support of Young Doctors of Science, Project MD-1020.2012.3). Francois Kajzar and Ileana Rau acknowledge the support of EU through the POS CEE ID_634/12575 project at Politehnica University of Bucharest. All authors contributed equally to this work.

Appendix A. Supplementary material

Supplementary data associated with this article can be found, in the online version, at http://dx.doi.org/10.1016/j.optmat.2013.05.018.

References

[1] F. Kajzar, J. Zyss, organic nonlinear optics: historical survey and current trends[1], Nonl. Opt. Quant. Opt. 43 (2012) 31–95.
[2] J. Zyss, I. Ledoux, S. Volkov, V. Vladimir Chernyak, S. Mukamel, G.P. Bartholome, G. Bazan, through-space charge transfer and nonlinear optical properties of substituted paracyclophane, J. Am. Chem. Soc. 122 (48) (2000) 11956–11962.
[3] A.A. Ashraf, A.A. Hassan, A.-F.E. Mourad, H. Hopf, Synthesis of biologically active [2.2]paracyclophanes, Arch. Pharm. Weinheim 325 (1992) 625–628.
[4] V. Rozenberg, N. Dubrovina, E. Vorontsov, E. Sergeeva, Yu Belokon', New chiral β-diketones based on [2.2]paracyclophane, Tetrahedron: Asymmetry 10 (1999) 511–517.
[5] L.N. Puntus, E.V. Sergeeva, D.Yu. Antonov, I.S. Pekareva, K.A. Lyssenko, F. Kajzar, The substituted [2.2]paracyclophanes as versatile platform for a design of new optical materials, Pros. of SPIE, Int. Soc.Opt. Eng. 8189B (2011) 46.
[6] G.M. Sheldrick, Acta Crystallogr. A64 (1) (2008) 112.
[7] Bruker, TOPAS 4.2 user manual, Bruker AXS GmbH, Karlsruhe, Germany, 2009.
[8] M.J. Frisch, G.W. Trucks, H.B. Schlegel, G.E. Scuseria, M.A. Robb, J.R. Cheeseman, J.A. Montgomery, T. Jr Vreven, K.N. Kudin, J.C. Burant, J.M. Millam, S.S. Iyengar, J. Tomasi, V. Barone, B. Mennucci, M. Cossi, G. Scalmani, N. Rega, G.A. Petersson, H. Nakatsuji, M Hada, M. Ehara, K. Toyota, R. Fukuda, J. Hasegawa, M. Ishida, T. Nakajima, Y. Honda, O. Kitao, H. Nakai, M. Klene, X. Li, J.E. Knox, H.P. Hratchian, J.B. Cross, V. Bakken, C. Adamo, J. Jaramillo, R. Gomperts, R.E. Stratmann, O. Yazyev, A.J. Austin, R. Cammi, C. Pomelli, J.W. Ochterski, P.Y. Ayala, K. Morokuma, G.A. Voth, P. Salvador, J.J. Dannenberg, V.G. Zakrzewski, S. Dapprich, A.D. Daniels, M.C. Strain, O. Farkas, D.K. Malick, A.D. Rabuck, K. Raghavachari, J.B. Foresman, J.V. Ortiz, Q. Cui, A.G. Baboul, A,S. Clifford, J. Cioslowski, B.B. Stefanov, G. Liu, A. Liashenko, P. Piskorz, I. Komaromi, R.L. Martin, D.J. Fox, T. Keith, M.A. Al-Laham, C.Y. Peng, A. Nanayakkara, M. Challacombe, P.M.W. Gill, W. Johnson, B. Chen, M.W. Wong, C. Gonzalez, J.A. Pople, Gaussian 03, Revision E.01, Gaussian, Inc., Wallingford CT, 2004.
[9] K.Y. Suponitsky, S. Tafur, A.E. Masunov, J. Chem. Phys. 129 (2008) 044109.
[10] K.Y. Suponitsky, Y. Liao, A.E. Masunov, J. Phys. Chem. A 113 (2009) 10994.
[11] S.K. Kurtz, T.T. Perry, A powder technique for the evaluation of nonlinear optical materials, J. Appl. Phys. 39 (1968) 3798.
[12] M. Barzoukas, P. Fremaux, D. Josse, F. Kajzar, J. Zyss, Quadratic and cubic nonlinearities in solution of intramolecular charge transfer aromatics molecules: a quantum two-level approach, in: A.J. Heeger, J. Orenstein, D.R. Ulrich (Eds.), vol. 109, Nonlinear Optical Properties of Polymers, Mater Research Society Symposium Proceed, 1988, p. 171.
[13] K.A. Lyssenko, M. Yu Antipin, D.Yu. Antonov, Chem. Phys. Chem. 8 (2003) 817–823.
[14] L.H. Thomas, A.J. Florence, C.C. Wilson, New J. Chem. (2009) 2486.
[15] A. Gavezzotti, Acc. Chem. Res. 27 (1994) 309–314;
A. Gavezzotti, Crystallogr. Rev. 7 (1998) 5–121.
[16] Yu.V. Nelyubina, I.V. Glukhov, M.Yu. Antipin, K.A. Lyssenko, Chem. Commun. 46 (2010) 3469–3471.
[17] P. Gilli, V. Bertolasi, V. Ferretti, G. Gilli, J. Am. Chem. Soc. 116 (1994) 909–915;
P. Gilli, G. Gilli, J. Mol. Struct. 552 (2000) 1–15.
[18] K.A. Lyssenko, M.Yu. Antipin, Russ. Chem. Bull. 55 (2006) 1–15.
[19] G.K.H. Madsen, G.L. McIntyre, B. Schiott, F.K. Larsen, Chem.– A Europ. J. 13 (2007) 5539–5547.
[20] I.D.L. Albert, T.J. Marks, M.A. Ratner, J. Am. Chem. Soc 119 (1997) 6575–6582;
V.P. Rao, A.K.-Y. Jen, J. Chandrasekhar, I.N.N. Namboothiri, A. Rathna, J. Am. Chem. Soc 118 (1996) 12443–12448;
E.M. Breitung, C.-F. Shu, R.J. McMahon, J. Am. Chem. Soc 122 (2000) 1154–1160.
[21] S.R. Marder, D.N. Beratan, L.T. Cheng, Science 252 (1991) 103–106.