Optical Materials 33 (2011) 882–887

Contents lists available at ScienceDirect

Optical Materials

journal homepage: www.elsevier.com/locate/optmat

Pump-power tunable white upconversion emission in lanthanide-doped hexagonal $NaYF_4$ nanorods

J.J. Li [a], L.W. Yang [a,c,*], Y.Y. Zhang [a], J.X. Zhong [a], Chang Q. Sun [b], Paul K. Chu [c]

[a] Laboratory for Quantum Engineering and Micro-Nano Energy Technology and Faculty of Materials and Optoelectronic Physics, Xiangtan University, Hunan 411105, China
[b] School of Electrical and Electronic Engineering, Nanyang Technological University, Singapore 639798, Singapore
[c] Department of Physics and Materials Science, City University of Hong Kong, Tat Chee Avenue, Kowloon, Hong Kong, China

ARTICLE INFO

Article history:
Received 6 November 2010
Received in revised form 31 December 2010
Accepted 18 January 2011
Available online 21 February 2011

Keywords:
Hexagonal $NaYF_4$ nanorods
Photoluminescence
Nonlinear optics

ABSTRACT

Pump-power tunable white upconversion (UC) emission under the excitation of a 980 nm laser diode from lanthanide-doped hexagonal $NaYF_4$ nanorods synthesized by a hydrothermal method is reported. The calculated color coordinates reveal that the UC white color output from both the Yb^{3+}–Ho^{3+}–Tm^{3+} and Yb^{3+}–Er^{3+}–Tm^{3+} triply-doped systems can be fine-tuned for a wide range of pump-power densities, but each has its own superiority. The former has a broader response scope to pump-power densities for white emission and the simulated white color output can be tuned more precisely, whereas the latter has a much broader range of white color output under the same pump-power densities. These desirable properties make these Ln^{3+} doped hexagonal $NaYF_4$ nanostructures promising in applications such as miniaturized solid-state light sources, multicolor three-dimensional display devices, optical processing sensors and multicolor labels for bioprobe and bioimaging.

© 2011 Elsevier B.V. All rights reserved.

1. Introduction

Frequency upconversion (UC) in lanthanide (Ln^{3+}) doped nanocrystals has been investigated intensively in the past decade due to their applications in solid-state blue–green lasers [1], three-dimensional color displays [2], solar cells [3], and especially fluorescent biolabels [4–6]. Recently, white UC emission from Ln^{3+}-doped nanocrystals has attracted increasing attention because of many potential applications [7–17]. Firstly, these nanocrystals can serve as lighting sources in nano-optical devices or as backlight sources, especially in three-dimensional backlighting for color displays. Secondly, the use of white UC nanocrystals as fluorescent biolabels can offer more simultaneous detection channels compared to UC or conventional biolabels, thereby facilitating probing of protein folding via the frequency resonant energy-transfer (ET) technique or allowing molecular fluorescence detection independent of the solution color [11]. Very recently, inspired by the report on white light simulation [16] in triply doped fluoride glass host, white UC emission under the excitation of a 980 nm laser diode (LD) has been achieved from Yb^{3+}–Er^{3+}–Tm^{3+} or Yb^{3+}–Ho^{3+}–Tm^{3+} doped glass ceramics containing $Pb_{1-x}Cd_xF_2$ [7] or YF_3 nanocrystals [8,9], Y_2O_3 nanocrystals [10,11], $Lu_3Ga_5O_{12}$ nanocrystals [12], Lu_2O_3 nanocrystals [13], cubic $NaYF_4$ nanocrystals [14], dielectric $BaTiO_3$ nanocrystals [15], and cubic $KGdF_4$ nanocrystals [17]. However, there have been few investigations on white UC emission in hexagonal $NaYF_4$(β-$NaYF_4$) nanostructures [18], which are identified as the most efficient host materials for UC emission [19–29]. On the other hand, although the luminescent spectra of Ln^{3+} doped nanocrystals vary little from host to host, the population densities of the donor and the acceptor states can be manipulated by precise control of the dopant concentration or pump-power densities as well as the size of nanocrystals, which influences the relative intensities of the different emission bands leading to changes in the color output from the Ln^{3+}-doped $NaYF_4$ nanostructures [14,20,30,31]. For example, Wang et al. have presented an approach to fine-tune the UC emission color from visible to NIR under 980 nm excitation in cubic $NaYF_4$ nanoparticles by precisely controlling the combination of Ln^{3+} ions and concentration [14]. Schietinger et al. have reported that the UC properties of single $NaYF_4$ nanocrystals co-doped with Yb^{3+} and Er^{3+} strongly depend on their size [31]. Owing to both the confinement effect on the spatial distribution of phonon modes and a reduced spectral density of phonon states in $NaYF_4$ nanocrystals, an increase of the ratio between the intensities of green and red emission bands was observed with a decrease of their size. In our previous work [20], we observed novel UC luminescent switching between 450, 480, and 800 nm from Yb^{3+}–Tm^{3+} co-doped β-$NaYF_4$ nanorods by adjusting the pump-power densities of 980 nm LD. Unfortunately, little is known about the influence of the pump-power densities on the white color output in the triply-doped $NaYF_4$ nanostructures

* Corresponding author at: Laboratory for Quantum Engineering and Micro-Nano Energy Technology and Faculty of Materials and Optoelectronic Physics, Xiangtan University, Hunan 411105, China. Tel.: +86 731 58292 113; fax: +86 731 58292 468.
E-mail address: ylwxtu@xtu.edu.cn (L.W. Yang).

0925-3467/$ - see front matter © 2011 Elsevier B.V. All rights reserved.
doi:10.1016/j.optmat.2011.01.016

[18]. In this investigation, we fabricate Yb^{3+}–Ho^{3+}–Tm^{3+} (YHT) and Yb^{3+}–Er^{3+}–Tm^{3+} (YET) triply-doped hexagonal $NaYF_4$ nanorods with bright white UC emission via a hydrothermal method. The dependences of the white color output on the pump-power densities in the two systems under the excitation of a 980 nm LD are investigated in detail.

2. Experimental details

Hexagonal $NaYF_4$ nanorods with optimal Ln^{3+} doping were synthesized by a hydrothermal method using oleic acid as a stabilizing agent under basic conditions similar to those reported by Zhang et al. [27] and the details of the experimental procedures have been reported elsewhere [17,18]. In the typical preparation, 0.7 g (17.5 mmol) of NaOH, 14.2 g (45.2 mmol) of oleic acid (90 wt.%), and 10.0 g of ethanol were mixed to obtain a white viscous solution. 12 ml (7.2 mmol) of a 0.58 M NaF solution was added under vigorous stirring until a translucent solution was obtained. Then 1.5 ml (1.2 mmol) of the 0.80 M $Y(NO_3)_3$ with an optimal Ln^{3+} doping content was poured into the solution under vigorous stirring. Before transferring to a Teflon-lined autoclave with an internal volume of 25 mL, the solution was aged for 20 min at room temperature. The hydrothermal reaction was conducted in an electrical oven at 190 °C for 20 h. After the reaction, the white products harvested by centrifugation were thoroughly washed with deionized water and dried at 60 °C for 48 h. The crystal structures of the samples were determined by X-ray diffraction using copper Kα radiation. The morphologies and microstructures of the synthesized samples were characterized using field emission scanning electron microscopy (FE-SEM) and high-resolution transmission electron microscopy (TEM, JEOL 2100) equipped with selected area electron diffraction. The UC spectra were recorded on a spectrophotometer (R-500) under excitation by a 980 nm LD. The dependence of the UC emission intensities on pumping power densities was obtained by changing the excitation power. The fluorescence spot of the parallel laser beam on the samples was about 0.4 cm in diameter and all the measurements were performed at room temperature.

3. Results and discussion

Fig. 1a shows the typical TEM image of the Ln^{3+}-doped $NaYF_4$ nanorods, revealing a morphology with a diameter of about 55 nm and length of about 300 nm. Fig. 1b shows the electron diffraction pattern (SAED) of single nanorod demonstrating unambiguously the single-crystalline nature. Fig. 1c is the high-resolution TEM (HRTEM) image of a nanorod showing lattice fringes with the *d*-spacing of 3.05 and 2.82 Å. The SAED pattern and HRTEM image can be readily indexed to the hexagonal phase of $NaYF_4$. The results are well consistent with the XRD results shown in Fig. 1d, in which the diffraction peaks are well indexed to β-$NaYF_4$ (JCPDS 16-0334). Further energy-dispersive X-ray analysis (EDS) confirms that the main elemental components are Na, Y, F and Yb (not shown here), being consistent with their real elemental components.

Our investigation chasing RGB emission and white light generation commences with the study of UC emission in binary dopant systems. Fig. 2a depicts the typical UC spectra acquired from the Yb^{3+}/Er^{3+} (25:0.2 mol%) co-doped sample under excitation by a 980 nm LD. The spectra show strong green emission centered at 540 nm and 525 nm and red UC one at 650 nm as well as weak violet and infrared emissions at 407 nm and 800 nm. They can be attributed to the $^2H_{11/2}/^4S_{3/2} \rightarrow {}^4I_{15/2}$, $^4F_{9/2} \rightarrow {}^4I_{15/2}$, $^2H_{9/2} \rightarrow {}^4I_{15/2}$, and $^4I_{9/2} \rightarrow {}^4I_{15/2}$ transitions of Er^{3+}, respectively. Fig. 2b shows the typical UC spectra from the Yb^{3+}/Ho^{3+} (25:0.2 mol%) co-doped sample under excitation by a 980 nm LD. Strong green and red UC emission bands centered at 540 nm and 650 nm are shown, together with weak blue and near-infrared emission around 485 nm and 750 nm. These bands can be respectively assigned to the $^5F_5 \rightarrow {}^5I_8$, $^4S_2/^5F_4 \rightarrow {}^5I_8$, $^5F_3 \rightarrow {}^5I_8$, and $^5I_4 \rightarrow {}^5I_8$ transitions of Ho^{3+} ions. The populations of the Er^{3+} or Ho^{3+} excited levels to emit the aforementioned UC bands can be readily achieved through successive ET processes from Yb^{3+} to Er^{3+} ions or Ho^{3+} [1], as demonstrated in Fig. 3. Fig. 2c shows the typical UC spectra of the Yb^{3+}/Tm^{3+} (25:0.25 mol%) co-doped sample. The intense blue emission bands at 451 and 478 nm correspond to the $^1D_2 \rightarrow {}^3F_4$ and $^1G_4 \rightarrow {}^3H_6$ transitions of Tm^{3+} ions, respectively. The populations of the $^1D_2$ and $^1G_4$ levels are accomplished respectively by three-step sequential ETs from the excited Yb^{3+} to Tm^{3+} and cross relaxation(CR) of $^3F_2 + {}^3H_4 \rightarrow {}^3H_6 + {}^1D_2$ between the Tm^{3+} ions (CR-I), which is a four-photon UC process [8]. Besides blue emissions, red emissions at 650 and 696 nm assigned to $^3F_2/^3F_3 \rightarrow {}^3H_6$ or $^1G_4 \rightarrow {}^3H_4/^3H_5$ transitions of Tm^{3+} ions which intensely depend on pump-power densities in the following, and intense near-infrared emission at 800 nm corresponding to $^3H_4 \rightarrow {}^3H_6$ transitions of Tm^{3+} ions are also recorded in this sample. It is worth mentioning that the RGB light color is readily visible to the naked eyes, even for pump-power as low as 10 mW. This is indicative of the high UC efficiency of the co-doped $NaYF_4$ nanorods.

Based on the generation of RGB light color from the different co-doped samples, it is possible to produce white emission by appropriate triple doping of Yb^{3+}, Tm^{3+}, and Er^{3+}or Ho^{3+} of the $NaYF_4$ nanorods. Fig. 2d displays the UC spectra of YHT (Yb^{3+}:Ho^{3+}:Tm^{3+} = 25:0.75:1) and YET (Yb^{3+}:Er^{3+}:Tm^{3+} = 25:0.25:1) triply-doped $NaYF_4$ nanorods showing bright white emission (see the inset photographs) under excitation by a 980 nm LD. Compared to the spectra of the binary dopant systems, it is easy to assign the origin of all the emission bands in the triple-doped $NaYF_4$ nanorods. The blue emission around 475 and 450 nm and the red emission at 696 nm can be assigned to the intra-4*f* electronic transitions of Tm^{3+} ions, and the green emission around 540 nm to the Ho^{3+} ions or Er^{3+} ions. For the red emission at 650 nm, it should include the contributions from both Tm^{3+} and Ho^{3+} ions or Er^{3+} according to the change of fine spectral shape in the red band.

Fig. 4a shows the UC spectra and corresponding CIE chromaticity diagram of 1931 together with the calculated color coordinates of the YET-triply-doped $NaYF_4$ nanorods under excitation by a 980 nm LD with various outputs. The calculated color coordinates range from (0.396, 0.395) to (0.264, 0.281), which correspond to the laser pump-power densities from 1.75 W/cm^2 to 16.13 W/cm^2. The arrow shown in the inset indicates the changing trends of the color coordinates with increasing pump-power densities. These color coordinates fall exactly within the white region of 1931 CIE diagram. In particular, the color coordinates at a pump-power density of 5.34 W/cm^2 is very close to the standard color coordinates (0.33, 0.33), suggesting their potential use in standard white light sources. At high pump-power densities, the color coordinates shift towards the blue region due to the fact that the intensity of the blue emission increases faster than the green and red UC ones. These results indicate that the simulated white color output can be modulated by adjusting the pump-power densities of the LD. Fig. 4b shows the UC spectra and corresponding CIE chromaticity diagram of 1931 together with the calculated color coordinates of the YHT-triply-doped $NaYF_4$ nanorods under excitation by a 980 nm LD with various outputs ranging from 1.78 W/cm^2 to 16.54 W/cm^2. Similar dependence of the color coordinates on pump-power densities can be observed. However, compared to the results obtained from the YET-triply-doped system, there are two obvious differences. The first is that the range of the calculated color coordinates is much narrower than that in the former under the same pump-power densities. The second one is that the pump-power density at which the calculated color coordinates are very

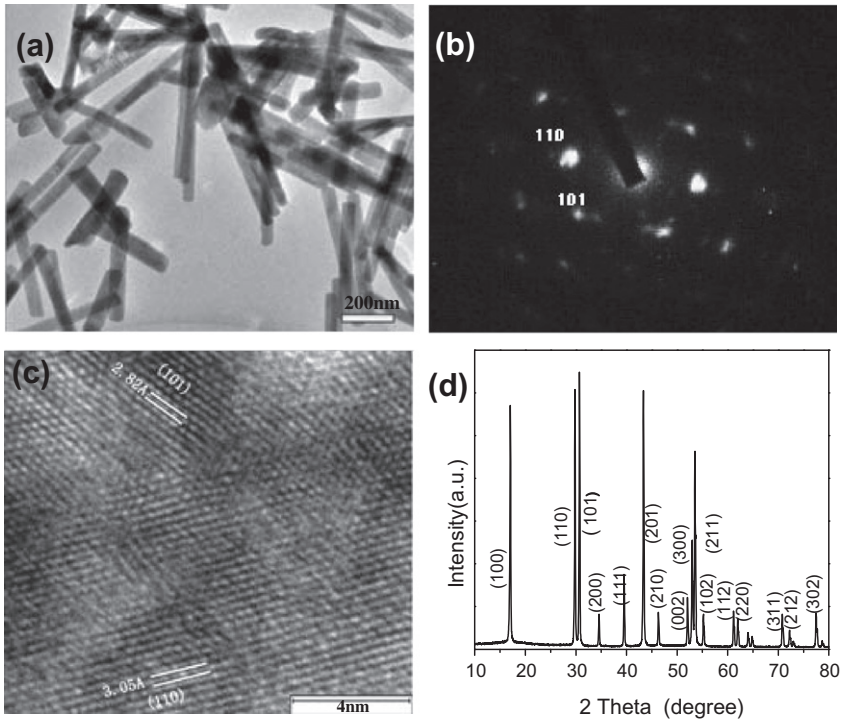

Fig. 1. (a) Typical TEM image obtained from the Ln^{3+}-doped $NaYF_4$ nanorods; (b) and (c) Typical SAED pattern and HRTEM image of single nanorod; (d) XRD patterns of Ln^{3+}-doped $NaYF_4$ nanorods.

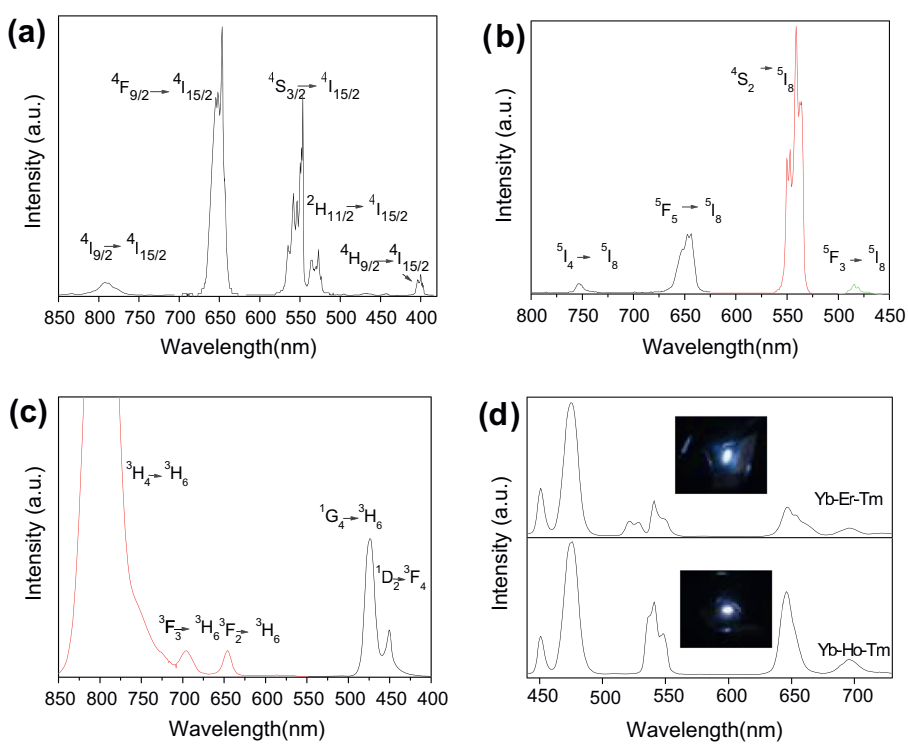

Fig. 2. Room temperature UC spectra under excitation by the 980 nm LD: (a) Yb^{3+}/Er^{3+} co-doped $NaYF_4$, (b) Yb^{3+}/Ho^{3+} co-doped $NaYF_4$, (c) Yb^{3+}:Tm^{3+} co-doped $NaYF_4$, and (d) $Yb^{3+}/Er^{3+}/Tm^{3+}$ and $Yb^{3+}/Ho^{3+}/Tm^{3+}$ triply-doped $NaYF_4$ nanorods. The insets are the corresponding digital photographs.

close to the standard color ones is 11.05 W/cm^2 is higher than that in the YET-triply-doped system. The results imply that the response scope to the pump-power densities for white emission from the YHT-triply-doped system is much broader than that from the YET-triply-doped system and the simulated white color output can be tuned even precisely. Therefore, promising applications would be expected for the white emission of the YHT-triply-doped $NaYF_4$ nanostructures. Furthermore, our results suggest a new

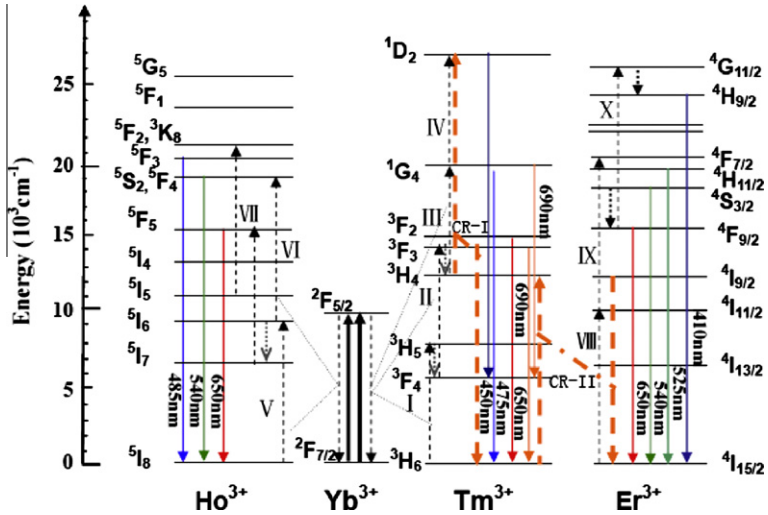

Fig. 3. Energy level diagrams of Tm^{3+}, Ho^{3+}, Er^{3+} and Yb^{3+} ions together with the proposed UC mechanism to produce the blue, green and red emissions. The thick black-full, dashed, dotted, thick orange-dashed, and thin color-full arrows represent photon excitation, energy transfer, multi-phonon relaxation, cross relaxation and emission processes, respectively. (For interpretation of the references to color in this figure legend, the reader is referred to the web version of this article.)

strategy to fine-tune the UC emission, different from that by precisely controlling the combinations of Ln^{3+}doping kinds and concentration [14] or by changing the size of $NaYF_4$ nanocrystals [31].

To further clarify the UC mechanism and dependence of the calculated color coordinates on the pump-power densities, the power dependent UC behaviors of the five visible emission bands are systematically investigated. Fig. 5a shows the log–log plot of the UC emission intensity versus pump-power densities for the YHT-triply-doped $NaYF_4$ nanorods. The slopes of the linear fits are 3.11, 2.14, 1.53, 1.48, and 1.34 for the five observed UC bands under low pump-power densities. The results indicate that two pump photons are necessary to produce the UC emission bands centered at 650, 540 and 696 nm, while three and four photons are needed to produce the blue UC emission bands at 475 and 450 nm. They are consistent with previous reports concerning cubic $NaYF_4$,Y_2O_3 and $BaYF_5$ nanocrystals [10,14,32]. Furthermore, the slopes of the blue and green UC bands as well as red emission band at 650 nm tend to decrease. This saturation effect can be attributed to the two factors [33–35]. The first one is saturation of Yb^{3+} absorption at high pump-power and the second may be related to the saturation of the excited states of $Tm^{3+}(^3F_4)$, $Ho^{3+}(^5I_6)$, and $Ho^{3+}(^5I_7)$ due to the efficient ET processes from Yb^{3+} to Tm^{3+} or Ho^{3+} ions [33,34]. However, the slope of the red emission band at 696 nm changes abnormally. For the abnormal change, we consider that it would originate from that at the low pump-power densities, it comes mainly from the $^3F_3 \rightarrow {}^3H_6$ transitions, which is a two-phonon process, but at high pump-power densities it does from the $^1G_4 \rightarrow {}^3H_5$ transition of the Tm^{3+}, which is a three-phonon process. Fig. 5b shows the log–log plot of the UC emission intensity versus the pump-power obtained from the YET-triply-doped $NaYF_4$ nanorods. Compared with the results in the YHT-triply-doped $NaYF_4$ nanorods, saturation-effect-induced decrease of slope values for blue and green emissions, and high pump-power-induced transition from $^3F_2 \rightarrow {}^3H_6$ to $^1G_4 \rightarrow {}^3H_5$ to emit 696 nm photon also exist. Here, we specifically focus on the photon number for blue emission at low pump-power densities. The slopes of 1.89 and 2.66 indicate that the two and three pump-photon processes are necessary to produce the UC emissions at 475 and 450 nm, which is inconsistent with the results in the YHT-triply-doped systems. The results imply that the pump condition for the excited states of $^3H_4$ being saturated can be realized more readily in the YET-triply-doped systems. Considering that the ratio of Yb^{3+} and Tm^{3+} are same implying that the ET rate between Yb^{3+} and Tm^{3+} would be equal in both systems, we suggest that the CR between Er^{3+} and Tm^{3+} play a key role.

There are many resonant CR processes for the Tm^{3+} and Er^{3+} ions. Previously, Chen et al. [9] found that by controlling the CR processes between the Tm^{3+} and the Er^{3+} ions, the red UC emission of Er^{3+} could be enhanced while blue UC emission of Tm^{3+} from transparent glass ceramics embedded with YET triply-doped YF_3 nanocrystals was reduced. It is believed that the nearly resonant CR process of $Tm^{3+}{:}^3H_6 + Er^{3+}{:}^2I_{9/2} \rightarrow Tm^{3+}{:}^3H_4 + Er^{3+}{:}^4I_{15/2}$ (CR-II in Fig. 3) is responsible for the saturation-effect inducing decrease in the required photon number to emit blue emissions at 450 nm and 475 nm since this CR process will increase the population of the Tm^{3+} $^3H_4$ excited states to make it saturated more easily. As a result, the intensity of blue emissions relative to the green and red UC ones from the YET-triply-doped systems increases rather faster than that from the YHT-triply-doped systems. It should be pointed out that the CR-II process increases the lifetime of the $Tm^{3+}{:}^3H_4$ state in the YET-triply-doped system compared to the Yb^{3+}–Tm^{3+} co-doped system. It has been confirmed very recently in the YET-triply doped dielectric $BaTiO_3$ nanocrystals [15].

Here, we also compare our results about UC white emission to the previously reported from other hosts such as glass ceramics containing $Pb_{1-x}Cd_xF_2$ or YF_3 nanocrystals, Y_2O_3 nanocrystals, $Lu_3Ga_5O_{12}$ nanocrystals, Lu_2O_3 nanocrystals, cubic $NaYF_4$ nanocrystals, and dielectric $BaTiO_3$ nanocrystals. In our experiments, we observe strong UC emission at 450 nm of Tm^{3+} ions and this has seldom been observed from these aforementioned hosts. Generally, the UC process to populate the upper excited $^1D_2$ level of Tm^{3+} ions for the 450 nm emission occurs with a small probability because it involves a four-photon process. Therefore, it can be inferred that the UC efficiency in hexagonal $NaYF_4$ should be higher than that reported for these various hosts. Moreover, the range of the white color output should be broader due to the contribution of the blue emission at 450 nm from hexagonal $NaYF_4$ nanorods.

4. Conclusion

Lanthanide-doped hexagonal $NaYF_4$ nanorods have been synthesized by a hydrothermal method. Bright white UC emission consisting of the blue UC radiation at 450 nm and 475 nm, green

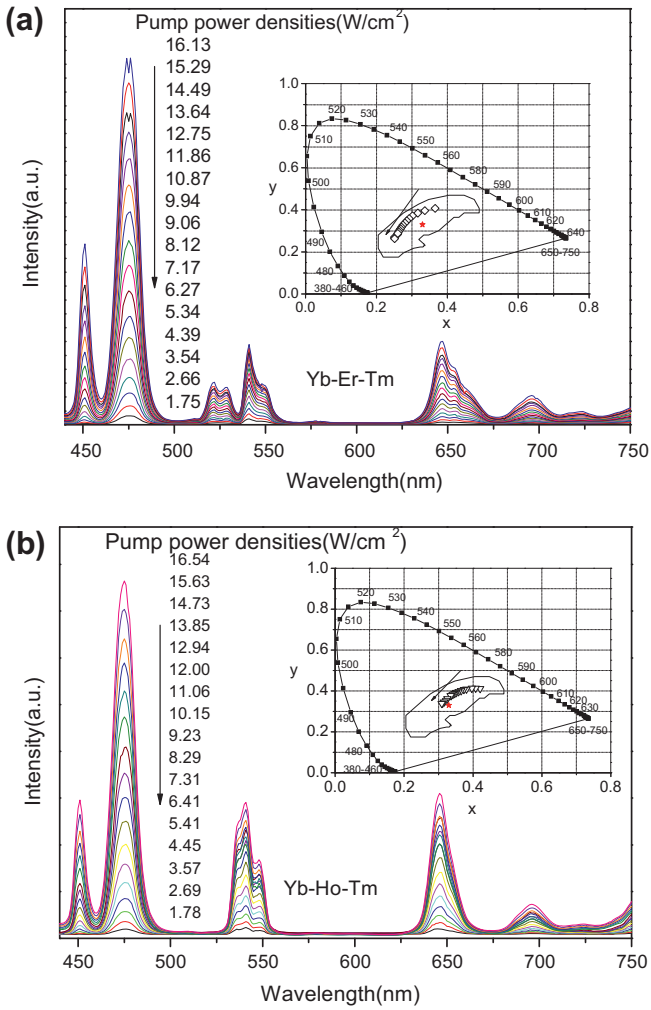

Fig. 4. Room temperature UC spectra and corresponding CIE chromaticity diagram (see the inset) of 1931 together with the calculated color coordinates in: (a) $Yb^{3+}/Er^{3+}/Tm^{3+}$ and (b) $Yb^{3+}/Ho^{3+}/Tm^{3+}$ triply-doped $NaYF_4$ nanorods under excitation by a 980 nm LD with various outputs. The arrows in the insets indicate the variation trends of the color coordinates with increasing pump-power densities. (For interpretation of the references to color in this figure legend, the reader is referred to the web version of this article.)

band at 545 nm, and red bands at 650 nm and 695 nm is observed in the YHT- and the YET-triply-doped $NaYF_4$ nanorods under excitation by a 980 nm LD. The calculated color coordinates reveal that the UC white color output from these two systems can be fine-tuned over a wide range of pump-power densities, but each has its own superiority. The former has broader response range to the pump-power densities for white emission and the simulated white color output can be tuned precisely. In comparison, the latter has a much broader range of white color output under the same pump-power densities. The origin can be attributed to the stronger saturation effect of the Tm^{3+}:$^3H_4$ state due to the resonant CR process of the Tm^{3+}:$^3H_6$ + Er^{3+}:$^2I_{9/2}$ → Tm^{3+}:$^3H_4$ + Er^{3+}:$^4I_{15/2}$ in the YET-triply-doped $NaYF_4$ nanorods. These phenomena are also expected from other hexagonal $NaYF_4$ nanostructures such as nanotubes, nanoplates, and water-soluble nanocrystals. Owing to their unique luminescence and chemical flexibility, hexagonal $NaYF_4$ nanostructures are potentially useful in miniaturized solid-state light sources, multicolor three-dimensional display devices, optical processing sensors and multicolor labels for bioprobe and bioimaging.

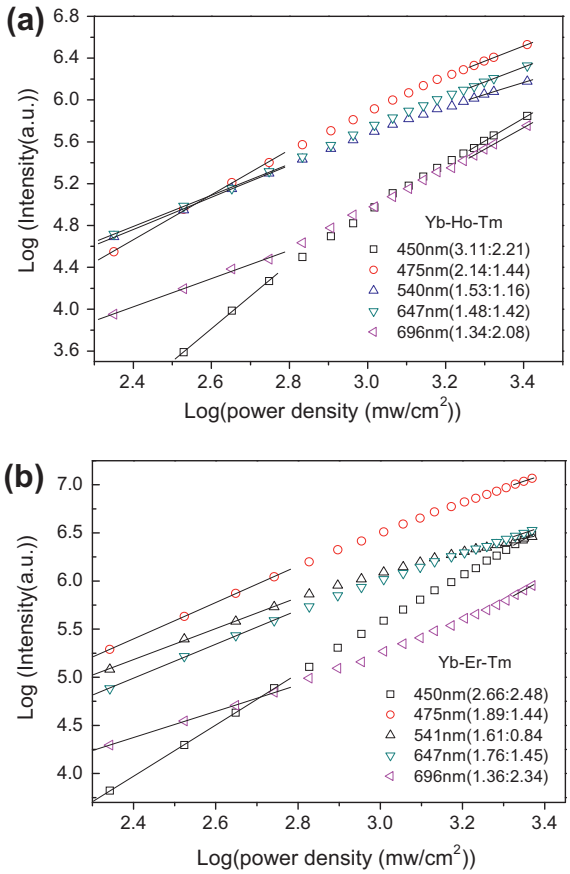

Fig. 5. Log–log plots of the UC emission intensity versus the pump-power densities in triply-doped $NaYF_4$ nanorods under excitation by the 980 nm LD: (a) $Yb^{3+}/Ho^{3+}/Tm^{3+}$ and (b) $Yb^{3+}/Er^{3+}/Tm^{3+}$.

Acknowledgments

This work was supported by the Grants from National Natural Science Foundation of China (Nos. 10802071 and 10772157) and Hong Kong Research Grants Council (RGC) Special Equipment Grant (SEG) No. SEG_CityU05. Partial support was also provided by the Chang Jiang Scholars Program, Ministry of Education, China.

References

[1] F. Auzel, Chem. Rev. 104 (2004) 139–173.
[2] E. Downing, L. Hesselink, J. Ralston, R. Macfarlance, Science 273 (1996) 1185.
[3] E.D. Rosa, P. Salas, H. Desirena, C. Angeles, R.A. Rodríguez, Appl. Phys. Lett. 87 (2005) 241912.
[4] F. Van de Rijke, H. Zijlmans, S. Li, T. Vail, A.K. Raap, R.S. Niedbala, H.J. Tanke, Nat. Biotechnol. 19 (2001) 273.
[5] L. Wang, R. Yan, Z. Huo, L. Wang, J. Zeng, J. Bao, X. Wang, Q. Peng, Y.D. Li, Angew. Chem. Int. Ed. 44 (2005) 6054.
[6] F. Wang, X. Liu, Chem. Soc. Rev. 38 (2009) 976.
[7] F. Ĺahoz, I.R. Martín, J.M. Calvilla-Quintero, Appl. Phys. Lett. 86 (2005) 051106.
[8] D. Chen, Y. Wang, Y.K. Zheng, T. Guo, Y. Yu, P. Huang, Appl. Phys. Lett. 91 (2007) 251903.
[9] D. Chen, Y. Wang, Y. Yu, P. Huang, F. Weng, J. Solid State Chem. 181 (2008) 2763.
[10] G.Y. Chen, Y. Liu, Y.G. Zhang, G. Somesfalean, Z.G. Zhang, Q. Sun, F.P. Wang, Appl. Phys. Lett. 91 (2007) 133103.
[11] G. Glaspell, J. Anderson, J.R. Wilkins, M.S. El-Shall, J. Phys. Chem. C 112 (2008) 11527.
[12] V. Mahalingam, F. Mangiarini, F. Vetrone, V. Venkatramu, M. Bettinelli, A. Speghini, J.A. Capobianco, J. Phys. Chem. C 112 (2008) 17745.
[13] J. Yang, C. Zhang, C. Peng, C. Li, L. Wang, R. Chai, J. Lin, Chem. Eur. J. 15 (2009) 4649.
[14] F. Wang, X. Liu, J. Am. Chem. Soc. 130 (2008) 5642.
[15] Y. Liu, W.A. Pisarski, S. Zeng, C. Xu, Q.B. Yang, Opt. Express 17 (2009) 9089.
[16] J.E.C. Da Silva, G.F. De Sá, P.A. Santa-Cruz, J. Alloys Compd. 344 (2002) 260.

[17] L.W. Yang, Y.Y. Zhang, J.J. Li, Y. Li, J.X. Zhong, P.K. Chu, Nanoscale 2 (2010) 2805.
[18] L.W. Yang, H.L. Han, Y.Y. Zhang, J.X. Zhong, J. Phys. Chem. C 113 (2009) 18995.
[19] S.J. Zeng, G.Z. Ren, W. Li, C.F. Xu, Q.B. Yang, J. Phys. Chem. C 114 (2010) 10750.
[20] Y.Y. Zhang, L.W. Yang, H.L. Han, J.X. Zhong, Opt. Commun. 282 (2009) 2857.
[21] S. Heer, K. Kömpe, H.U. Güdel, M. Haase, Adv. Mater. 16 (2004) 2102.
[22] J.F. Suyver, A. Aebischer, D. Biner, P. Gerner, J. Grimm, S. Heer, K.W. Krämer, C. Reinhard, H.U. Güdel, Opt. Mater. 27 (2005) 1111.
[23] J.C. Boyer, F. Vetrone, L.A. Cuccia, J.A. Capobianco, J. Am. Chem. Soc. 128 (2006) 7444.
[24] J.C. Boyer, L.A. Cuccia, J.A. Capobianco, Nano Lett. 7 (2007) 847.
[25] H.X. Mai, Y.W. Zhang, R. Si, Z.G. Yan, L.D. Sun, L.P. You, C.H. Yan, J. Am. Chem. Soc. 128 (2006) 6426.
[26] L. Wang, Y.D. Li, Nano Lett. 6 (2006) 1645.
[27] F. Zhang, Y. Wan, T. Yu, F.Q. Zhang, Y.F. Shi, S.H. Xie, Y.G. Li, L. Xu, B. Tu, D.Y. Zhao, Angew. Chem. 119 (2007) 8122.
[28] R. Kumar, M. Nyk, T.Y. Ohulchanskyy, C.A. Flask, P.N. Prasad, Adv. Funct. Mater. 19 (2009) 853.
[29] Y.Y. Zhang, L.W. Yang, C.F. Xu, J.X. Zhong, C.Q. Sun, Appl. Phys. B 98 (2010) 243.
[30] Y. Sun, Y. Chen, L. Tian, Y. Yu, X. Kong, J. Zhao, H. Zhang, Nanotechnology 18 (2007) 275609.
[31] S. Schietinger, L.S. Menezes, B. Lauritzen, O. Benson, Nano Lett. 9 (2009) 2477.
[32] A. Santana-Alonso, J. Méndez-Ramos, A.C. Yanes, J. del-Castillo, V.D. Rodríguez, Opt. Mater. 32 (2010) 903.
[33] M. Pollnau, D.R. Gamelin, S.R. Luthi, H.U. Güdel, M.P. Hehlen, Phys. Rev. B 61 (2000) 3337.
[34] C. Jacinto, M.V.D. Vermelho, E.A. Gouveia, M.T. de Araujo, P.T. Udo, N.G.C. Astrath, M.L. Baesso, Appl. Phys. Lett. 91 (2007) 071102.
[35] W.F. Silva, G.S.N. Eliel, P.V. dos Santos, M.T. de Araujo, M.V.D. Vermelho, P.T. Udo, N.G.C. Astrath, M.L. Baesso, C. Jacinto, J. Chem. Phys. 133 (2010) 034507.