Symmetric Terabit WDM Pre-DFT OFDM access network using PCF-supercontinuum

Bo Liu,[1,2] Lijia Zhang,[1,2,*] Xiangjun Xin,[1,2] and Jianjun Yu[1,3]

[1]*State Key Laboratory of Information Photonics and Optical Communications, Beijing University of Posts and Telecommunications, Beijing 100876, China*
[2]*School of Electronic Engineering, Beijing University of Posts and Telecommunication, Beijing 100876, China*
[3]*ZTE USA Inc., Iselin, NJ, 08834, USA*
[*]*zhanglijiabupt@gmail.com*

Abstract: We have proposed a novel WDM Terabit access network based on pre-DFT orthogonal frequency division multiplexing (OFDM) and single photonic crystal fiber (PCF) supercontinuum (SC) light source. Duplex access with source-free ONUs is realized in this architecture. The single SC source can be shared with a number of ONUs and simplifies the network configuration, which can allow the realization of high-reliability as well as low-cost. The pre-DFT technology can help to mitigate the fiber nonlinearity of OFDM signal. A 2.5THz wide frequency comb which is potential to support symmetric 2.56Tb/s WDM pre-DFT OFDM access over 60 km with 1600 supported ONUs was demonstrated in the experiment. The demonstrated architecture may be viewed as one promising for future terabit optical metro/access.

©2012 Optical Society of America

OCIS codes: (060.0060) Fiber optics and optical communications; (060.4250) Networks; (060.4370) Nonlinear optics, fibers.

References and links

1. D. Breuer, F. Geilhardt, R. Hülsermann, M. Kind, C. Lange, T. Monath, and E. Weis, "Opportunities for next-generation optical access," IEEE Commun. Mag. **49**(2), s16–s24 (2011).
2. J. Chen, L. Wosinska, C. Machuca, and M. Jaeger, "Cost vs. reliability performance study of fiber access network architectures," IEEE Commun. Mag. **48**(2), 56–65 (2010).
3. F. J. Effenberger, "The XG-PON system: cost effective 10 Gb/s access," J. Lightwave Technol. **29**(4), 403–409 (2011).
4. H. L. Zhang, G. W. Pickrell, Z. Morbi, Y. Wang, M. Ho, K. A. Anselm, and W. Y. Hwang, "32-channel, injection-locked WDM-PON SFP transceivers for symmetric 1.25 Gbps operation," i*n Proc.*OFC, USA, paper.NTuB4 (2011).
5. Z. Li, L. Yi, Y. Zhang, Y. Dong, S. Xiao, and W. Hu, "Compatible TDM/WDM PON using a single tunable optical filter for both downstream wavelength selection and upstream wavelength generation," IEEE Photon. Technol. Lett. **24**(10), 797–799 (2012).
6. D. Z. Hsu, C. C. Wei, H. Y. Chen, W. Y. Li, and J. Chen, "Cost-effective 33-Gbps intensity modulation direct detection multi-band OFDM LR-PON system employing a 10-GHz-based transceiver," Opt. Express **19**(18), 17546–17556 (2011).
7. Y. Ma, Q. Yang, Y. Tang, S. Chen, and W. Shieh, "1-Tb/s single-channel coherent optical OFDM transmission over 600-km SSMF fiber with subwavelength bandwidth access," Opt. Express **17**(11), 9421–9427 (2009).
8. D. Qian, T. T. Kwok, N. Cvijetic, J. Hu, and T. Wang, "41.25 Gb/s real-time OFDM receiver for variable rate WDM-OFDMA-PON transmission," in *Proc.OFC'10*, paper.PDPD9 (2010).
9. N. Cvijetic, M. Cvijetic, M. F. Huang, E. Ip, Y. K. Huang, and T. Wang, "Terabit optical access networks based on WDM-OFDMA-PON," J. Lightwave Technol. **30**(4), 493–503 (2012).
10. J. Zhang, J. Yu, N. Chi, Y. Shao, L. Tao, J. Zhu, and Y. Wang, "Stable optical frequency-locked multi-carriers generation by double recirculating frequency shifter loops for Tb/s communication," J. Lightwave Technol. (forthcoming).
11. P. Domachuk, N. A. Wolchover, M. Cronin-Golomb, A. Wang, A. K. George, C. M. B. Cordeiro, J. C. Knight, and F. G. Omenetto, "Over 4000 nm bandwidth of mid-IR supercontinuum generation in sub-centimeter segments of highly nonlinear tellurite PCFs," Opt. Express **16**(10), 7161–7168 (2008).
12. L. Zhang, X. Xin, B. Liu, Y. Wang, J. Yu, and C. Yu, "OFDM modulated WDM-ROF system based on PCF-Supercontinuum," Opt. Express **18**(14), 15003–15008 (2010).
13. J. L. Wei, E. Hugues-Salas, R. P. Giddings, X. Q. Jin, X. Zheng, S. Mansoor, and J. M. Tang, "Wavelength reused bidirectional transmission of adaptively modulated optical OFDM signals in WDM-PONs incorporating SOA and RSOA intensity modulators," Opt. Express **18**(10), 9791–9808 (2010).

#175754 - $15.00 USD Received 6 Sep 2012; revised 5 Oct 2012; accepted 5 Oct 2012; published 10 Oct 2012

14. E. Hugues-Salas, R. P. Giddings, X. Q. Jin, Y. Hong, T. Quinlan, S. Walker, and J. M. Tang,"REAM intensity modulator-enabled 10Gb/s colorless upstream transmission of real-time optical OFDM signals in a single-fiber-based bidirectional PON architecture," Opt. Express **20**(19), 21089–21100 (2012).

1. Introduction

Future passive optical network (PON) is envisioned to support 100 + Gb/s data rates, high count of optical network unit (ONU) and content rich services such as cloud center services, all of which subject to strict cost and energy efficiency targets in PON [1–3]. It is also desirable to simplify the network system and increase the flexibility of the services allocation. Great efforts have been dedicated to meet the above features in the past few years [4–6]. A promising solution is WDM-based architecture with high capacity, large coverage and easy upgradeability. Inducing orthogonal frequency division multiplexing (OFDM) technique into WDM-PON can further increase the flexibility of the network as well as upgrading to long-reach metro access. It has been intensively investigated by many research groups recent years [6–9]. The dynamic subcarrier allocation and variable QAM mapping can provide flexible bandwidth allocation in WDM-PON. Besides, the parallel subcarrier transmission and adoption of cyclic prefix can offer the signal good resistance to fiber dispersion, which is one of the major impairments in long-reach access. However, for WDM optical access network, it needs huge number of light sources at the optical line terminal (OLT) which would result in a high-cost system. Recently, a wavelength multi-carrier generation by recirculating frequency shifter (RFS) has been proposed for WDM application [10]. Yet a high optical power is required for the RFS loop to produce the multi-carrier source, and the accumulated noise of EDFA in the RFS loop restricts the channel number of the source. A supercontinuum (SC) light source has been developed as a multi-carrier light source to realize low-cost WDM system. Bandwidth up to 4000nm can be achieved with SC, which could even support all-wavelength communication in a cost-efficient way [11].

Recently, we have proposed an OFDM modulated ROF system with photonic crystal fiber (PCF) SC source and it can choose mm-wave carriers at any space from the frequency comb [12]. The PCF-SC is can easily generate a stable SC due to its higher nonlinearity and controllable dispersion curve. In this paper, we propose a novel scheme for future Terabit WDM-PON supporting duplex access and source-free ONU, where a single PCF-SC is adopted for shared light source. The pre-discrete Fourier transform (pre-DFT) OFDM modulation is further utilized for fiber nonlinearity mitigation. A maximum of 2.5Tb/s symmetric WDM pre-DFT OFDM access system is demonstrated over 60km single mode fiber.

2. System configuration

The detailed diagram of the proposed Terabit WDM pre-DFT OFDM access network with PCF-SC source is depicted in Fig. 1. At the OLT, a broadband SC source with the space of f_P is generated through a pico-second pulse laser with a repetition rate of f_P plus an 80m-long high nonlinear PCF, which is shown as inset (i) of Fig. 1. The PCF gets a slight negative dispersion and a nonlinear coefficient of 11 ($W^{-1}\cdot km^{-1}$), the detailed structure has been illustrated in our previous work [12]. After a booster amplifier, the PCF broadens the incident pulse through self-phase modulation (SPM). As the input power increases, the fission of higher-order solitons and four wavelength mixing (FWM) attribute to the generation of SC. A programmable wavelength selective switch (WSS) equalizes the power of all optical wavelengths and separates them into even and odd wavelength channels. The even channels are used for the OFDM downstream modulated through the Mach-Zehnder modulators (MZMs), and the blank odd channels are reserved for OFDM upstream. The peak-to-average power ratio (PAPR) is one of the major drawbacks of optical OFDM signal, which would lead to large nonlinear effects in optical fiber link and limits the transmitted optical power at the OLT. However, large power budget is needed in future large split network which requires higher transmitted optical power compared with the conventional PON. On the other hand, the dense wavelength access puts forward more severe requirement on the nonlinear

#175754 - $15.00 USD Received 6 Sep 2012; revised 5 Oct 2012; accepted 5 Oct 2012; published 10 Oct 2012
(C) 2012 OSA

interference between OFDM subcarriers. The pre-discrete Fourier transform (pre-DFT, or DFT-precoded) OFDM can reduce the PAPR of OFDM signal and mitigate the nonlinearity of the OFDM signal. The modulation and demodulation blocks of pre-OFDM signal are shown in inset (ii) in Fig. 1. For M-point pre-DFT OFDM signal, the operation spreads data over the entire bandwidth of the subcarriers through K-point inverse fast Fourier transform (IFFT), where K is the total number of OFDM subcarriers.

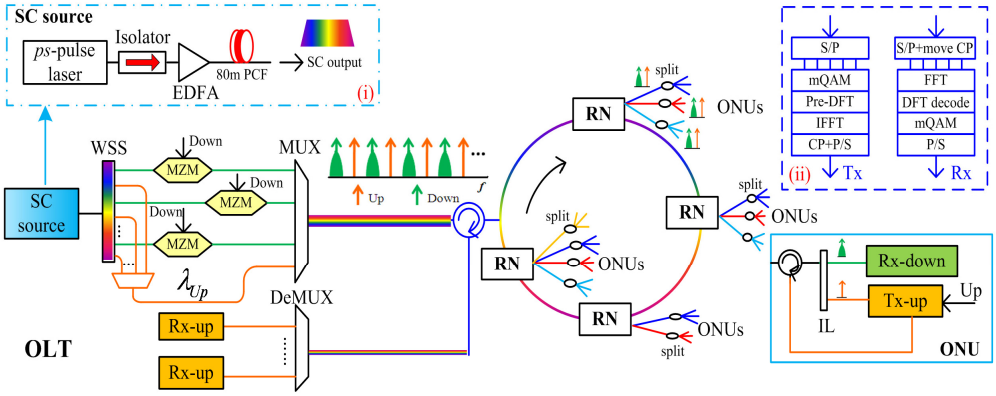

Fig. 1. Proposed Terabit WDM pre-OFDM access network architecture with a single PCF-SC source (PCF: photonics crystal fiber; SC: supercontinumm; WSS: wavelength selective switch; MZM: Mach-Zehnder modulator; MUX/DeMUX: multiplexer/demultiplexer; RN: remote node; IL: interleaver).

The SC source could produce large number of wavelengths as to sustain converged access-metro ring network. The remote node (RN) is responsible for the adding and dropping channels from the ONU trees. At the RN, a WSS is adopted to dynamically select out different pairs of even and odd channels according to the scale of ONUs. It ensures the network a more flexible allocation. The pair of even and odd channels is power split by a 1: N splitter before sent to the ONUs. The even channel with downstream data is fed into the downstream receiver, and the blank odd channel is filtered out to add the upstream data. The upstream data is added onto the blank optical carrier through modulator such as reflective electro-absorption modulator (REAM) or reflective semiconductor optical amplifier (RSOA) etc [13, 14]. At the OLT, the upstream pre-DFT OFDM signals are demultiplexed and then demodulated as inset (ii) shows.

3. Simulation and experiment investigation

3.1 Simulation demonstration of the concept at a rate of 2.56Tb/s

Figure 2 depicts the simulation scheme of the proposed WDM pre-DFT OFDM access network with SC source. Matlab 7.0 and VPItransmissionMaker 7.5 are used to execute the simulation. At the OLT, an optical frequency comb is generated by the SC source comprising of a pico-second pulsed laser with a repetition rate of 12.5 GHz and an 80 m-long PCF. After a booster EDFA, a programmable WSS with a resolution of 12.5 GHz equalizes the output, and a12.5/25 interleaver (IL) provides dis-interleaving into even and odd channels. We totally choose out 200 optical frequency channels with a span of 20 nm from 1545nm to 1565nm. The optical spectra after the WSS and the IL are shown in Figs. 3(a)-3(c). The even channels named $\lambda_{i,DS}$ (i = 1,2,…,100) are further dis-interleaved by a 25/50 IL and sent for downstream signal modulation. The odd channels named $\lambda_{i,US}$ (i = 1,2,…,100) are reserved for upstream. A 12.8 Gb/s pre-DFT OFDM signal described in the inset of Fig. 2 is generated where 64-point DFT and 16QAM modulation is used. In the scheme, the pre-DFT OFDM signal is up-converted to generate a real signal before D/A. The real signal can be intensity modulated by MZM working in the linear area at 1.7V with half-wave voltage of 3.5V. In practice, the OFDM signal can be up-converted through electrical I/Q mixer after D/A, which can reduce

#175754 - $15.00 USD Received 6 Sep 2012; revised 5 Oct 2012; accepted 5 Oct 2012; published 10 Oct 2012
(C) 2012 OSA

the sampling frequency of D/A converter. After optical modulation, the even channels are amplified and combined with the odd channels, and the optical spectrum is shown in Fig. 3(d). The aggregated signal is transmitted over 40km of single mode fiber (SMF) to the RN on the ring, where it is amplified and routed via WSS into $\lambda_{i,DS}/\lambda_{i,US}$ wavelength pair for distribution to the PON. There we adopt two RNs and each RN is in charge of 50 wavelength pairs described in Fig. 2, where RN1 is 1~50 pairs and RN2 is 51~100 pairs. To show the dynamic allocation of the RN, we drop the 50 wavelength pairs in several parts at the RN1 and RN2. The optical spectra in one allocation at RN1 and RN2 are shown in Figs. 3(e)-3(h). The high frequency part is for RN1 and the low frequency part is for RN2. After additional 20km SMF and 1:16 optical split, $\lambda_{i,DS}/\lambda_{i,US}$ are separated at the ONU through a 12.5/25 IL. In the simulation, we select one downstream wavelength for demodulation each time. The downstream signal is directly detected through a 10GHz photodiode (PD) and digitized by the A/D convertor. Then the ONU demodulates the signal to extract the needed data. For upstream transmission, the output of the pre-DFT OFDM signal from the D/A convertor is modulated onto the distributed carrier of $\lambda_{i,US}$ by a REAM. The parameters of REAM and pre-DFT OFDM signal are shown in Table 1. At the OLT, the upstream signal is WDM-demultiplexed by a DeMUX, directly detected, digitized and processed. The architecture can support a total of 1600 ONUs with 2.56 Tb/s peak rate. It can be scaled up by choosing wider SC spectrum span and increase the data rate on each wavelength.

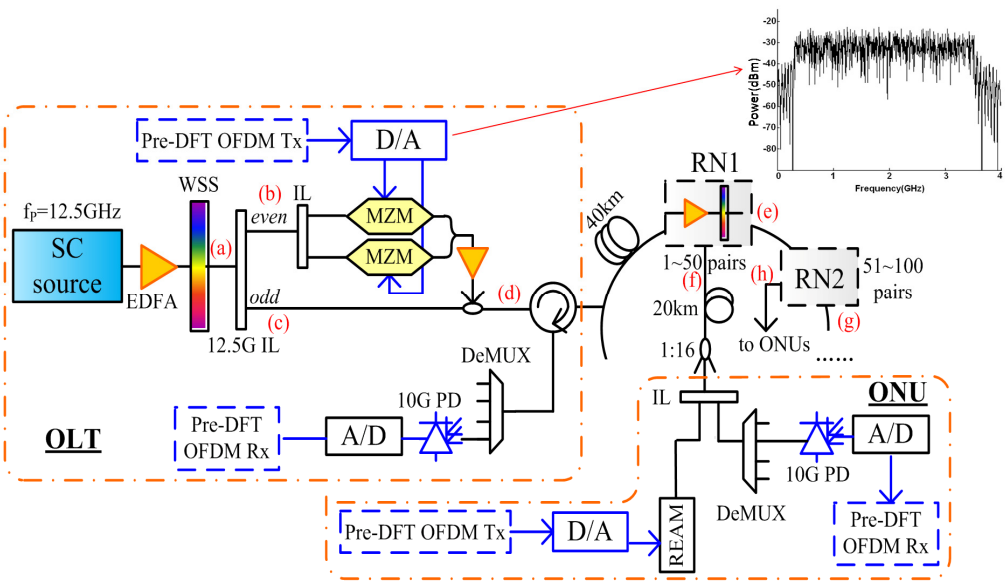

Fig. 2. Simulation scheme (PD: photodiode; REAM: reflective electro-absorption modulator).

#175754 - $15.00 USD Received 6 Sep 2012; revised 5 Oct 2012; accepted 5 Oct 2012; published 10 Oct 2012
(C) 2012 OSA

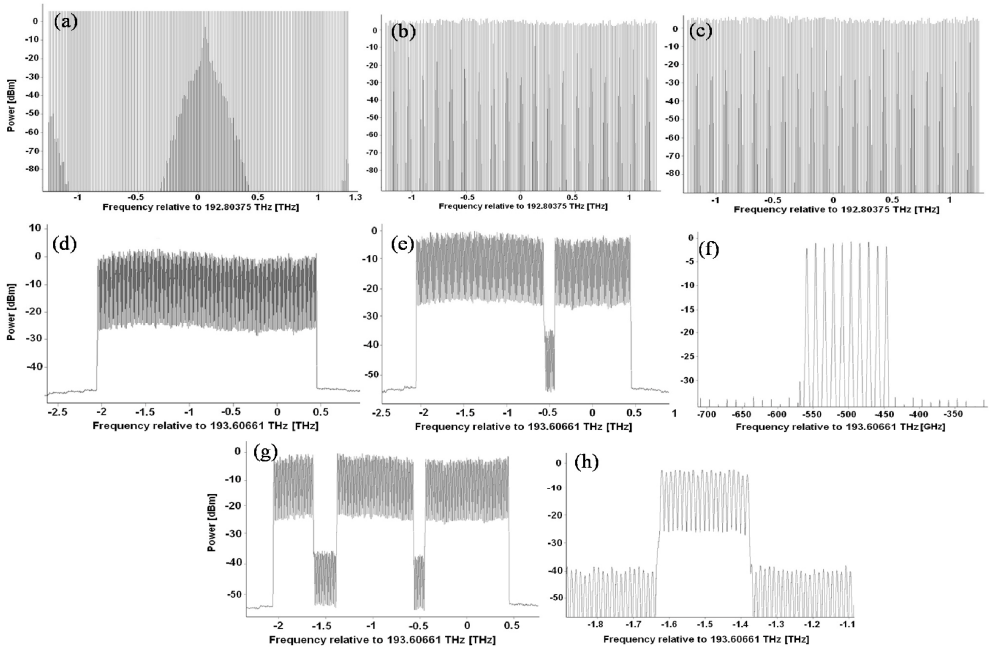

Fig. 3. The optical spectra (a) after WSS of OLT; (b)-(c): after 12.5G IL; (d) before transmission; (e)-(f): at RN1; (g)-(h): at RN2.

Table 1. Parameters of signal and REAM

REAM			
Parameter		**Value**	
DC bias	–1.4V	Current	100mA
Pre-DFT OFDM			
Parameter	**Value**	**Parameter**	**Value**
Subcarrier number	256	Symbol number	97800
Parameter	**Value**	**Parameter**	**Value**
CP length	1/16	pilot	8

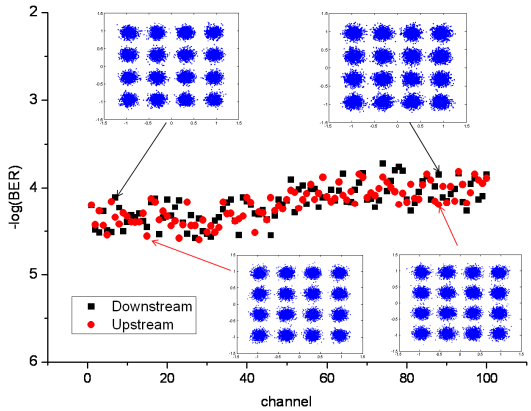

Fig. 4. Downstream and upstream performance for symmetric 2.56Tb/s WDM pre-DFT OFDM access network.

All the 100 wavelength pairs are measured in the simulation. Figure 4 plots the measured downstream/upstream bit error ratio (BER) for the symmetric 2.56Tb/s WDM pre-DFT OFDM access network. It can be seen that all downstream and upstream channels achieved a

#175754 - $15.00 USD Received 6 Sep 2012; revised 5 Oct 2012; accepted 5 Oct 2012; published 10 Oct 2012
(C) 2012 OSA

BER below $1x10^{-3}$ after transmission. The BER variations across the 20 nm span are mainly attributed to the uneven EDFA gain spectra and fiber nonlinear noise. The BERs of channel 51~100 are lower than channel 1~50 due to the additional link noise at RN2.

3.2 Experiment demonstration and analysis

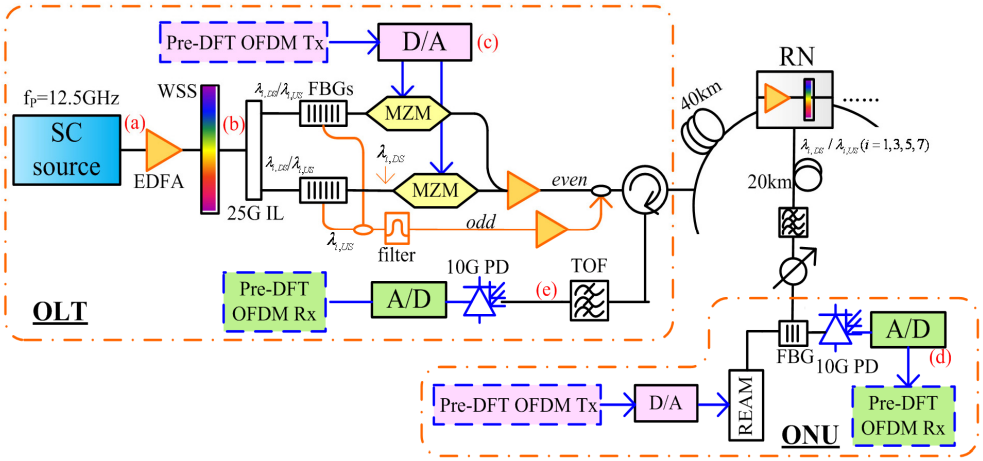

Fig. 5. Experimental setup (FBGs: fiber Bragg grating groups; TOF: tunable optical filter).

Table 2. System Parameters for Experiment

IL output	Central frequencies (nm)				
Upper output	1554.49	1554.89	1555.29	1555.69	1556.09
Bottom output	1554.69	1555.09	1555.49	1555.89	1556.29

We have carried out a 20 channels experiment due to the instruments limitation and Fig. 5 shows the experimental setup. A pico-second pulsed laser with a repetition rate of 12.5 GHz and an 80 m-long PCF is adopted to generate the SC source. The initial spectrum of SC source is shown in Fig. 6(a), where the broadband frequency comb gets a space of 12.5 GHz. In the experiment, a 25G WSS is adopted to equalize the SC source and select out the frequency comb with bandwidth of 20 nm (or 2.5 THz) from 1545.27nm to 1565. 37nm. The optical spectrum is shown in Fig. 6(b), where the amplitude difference between different wavelengths is smaller than 1.2 dB. There are 200 optical wavelengths with spacing of 0.1 nm (12.5 GHz). A 25/50 IL is adopted to dis-interleaving the $\lambda_{i,DS}/\lambda_{i,US}$ pairs into two part. To further separate the even and odd channels, two properly designed fiber Bragg grating groups (FBGs) are employed to filter out the ten even channels, where each FBGs is designed for five channels. The central frequencies are shown in Table 2. The ten odd channels are filtered out from the reflected spectrum of the two FBGs by an optical filter. The combined odd and even channels are numbered $\lambda_{i,DS}/\lambda_{i,US}$ (i = 1,2,…,10). In the experiment, we use the same pre-DFT OFDM signal as simulation, and it is generated by offline processing with Matlab®. An arbitrary waveform generator (AWG1) with sample rate of 10Gs/s acts as the D/A convertor. The electrical spectrum of the signal is shown in Fig. 6(c). The total power launching into the transmission fiber is 11 dBm, corresponding to ~-2 dBm per wavelength channel. The optical power at each frequency is small enough to suppress the stimulated Brillouin scattering. In this scheme, the upstream and downstream signals are modulated onto different frequencies, where the effect of Reyleigh backscattering (RB) is small; the re-amplification of upstream carrier can further improve the optical sigal-to-RB ratio (OSRR). The RB noise can be well suppressed in this bidirectional access system.

#175754 - $15.00 USD Received 6 Sep 2012; revised 5 Oct 2012; accepted 5 Oct 2012; published 10 Oct 2012
(C) 2012 OSA

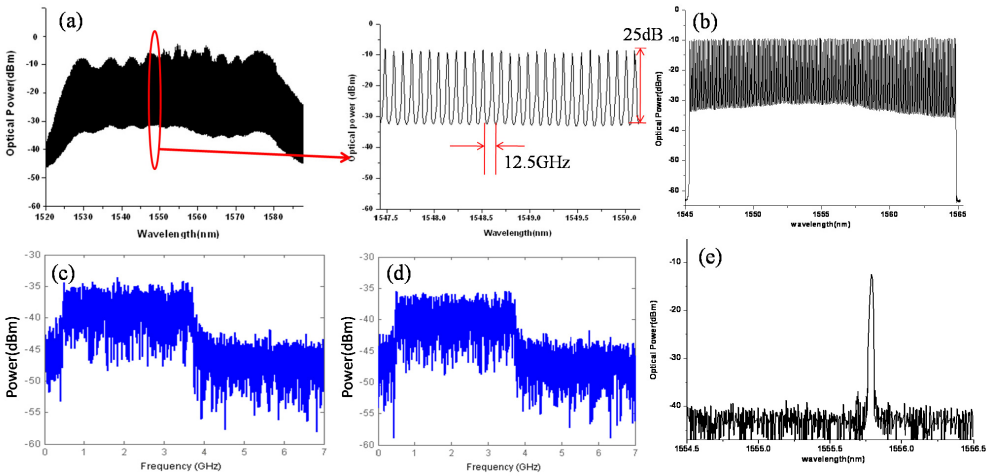

Fig. 6. The spectrum (a) of the initial SC source; (b) after WSS; (c) of transmitted electrical signal; (d) received electrical signal; (e) upstream channel at OLT (optical resolution: 0.01nm).

At the RN, we choose out four pairs of $\lambda_{i,DS}/\lambda_{i,US}$ (i = 1,3,5,7) using a WSS and transmitted them through another 20km SMF. A tunable optical filter (TOF) is employed to select out the wavelength pair as well as suppress the amplified spontaneous emission (ASE) noise. For the target wavelength pair, a 1:16 split is emulated with a tunable optical attenuator with resolution of 0.1 dB. A FBG is employed to separate the odd and even channel at the ONU. The downstream signal is directly detected and sampled by a 20Gs/s real-time digital sampling scope (TDS) acting as the A/D convertor. The downstream signal demodulation is executed through offline processing, and the received electrical spectrum is shown in Fig. 6(d). For upstream transmission, the blank odd carrier is filtered out and modulated with 12.8 Gb/s pre-DFT OFDM signal using the REAM. At the OLT, direct detection is adopted for upstream demodulation. Figure 6(e) shows the optical spectrum of one received channel.

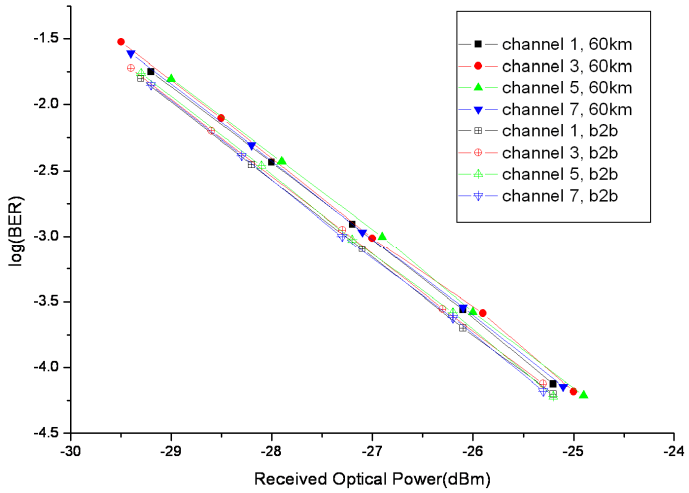

Fig. 7. The measured BER curves of four-channel downstream signals before and after transmission.

Figure 7 plots the measured BER curves for the four-channel downstream pre-DFT 16QAM-OFDM signals. It can be observed that the BER performances of the four channels are almost the same. The power penalties of the signals before and after 60km transmission are about 0.2 dB, which is mainly due to the additional ASE noise introduced by the amplifier

#175754 - $15.00 USD Received 6 Sep 2012; revised 5 Oct 2012; accepted 5 Oct 2012; published 10 Oct 2012
(C) 2012 OSA

at RN1. Figure 8 illustrates the BER performance for the upstream signals. The power penalties of the signals are about 0.4 dB and the receiver sensitivity after 60km transmission is about −26.7 dBm at BER of 10^{-3}, which has 0.42 dB deterioration compared with the downstream signals. It is mainly because the optical carriers and from the OLT and signals suffer more from the channel noise.

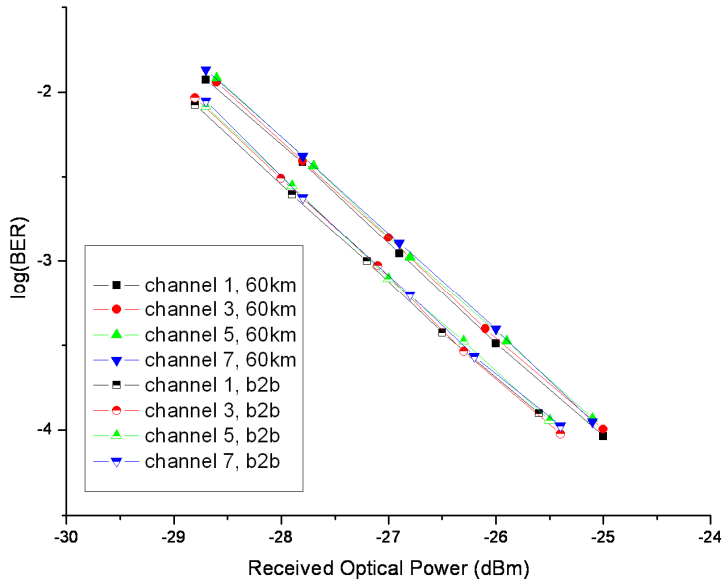

Fig. 8. The measured BER curves of four-channel upstream signals before and after transmission.

4. Conclusion

We have proposed and demonstrated a symmetric Terabit WDM pre-DFT OFDM access network architecture with a single PCF-SC source. Dynamic routing at RN and source-free ONUs are realized in this network. The demonstrated 2.56Tb/s WDM pre-DFT OFDM network has the potential to support up to 1600 ONUs for 60 km transmission, which can be scaled up by choosing wider span of SC source and higher data rate on each wavelength. The PCF-SC source with nearly 50nm bandwidth is generated in our experiment, which could support up to 6.4Tb/s access with 4000 ONUs. The simulation and experiment results show it a promising solution for future optical metro/access networks.

Acknowledgment

The financial supports from National Basic Research Program of China with No. 2010CB328300, National High Technology 863 Program of China with No.2012AA011300, National NSFC with No. 60932004, 61077050, 61077014, 61205066 and National International Technology Cooperation with No.2012DFG12110 are gratefully acknowledged. The project is also supported by the Fundamental Research Funds for the Central Universities with No. 2012RC0311.