Phase-locked carrier-envelope-offset frequency at 1560 nm

Holger Hundertmark, Dieter Wandt, Carsten Fallnich

Laser Zentrum Hannover e.V., Hollerithallee 8, 30419 Hannover, Germany
hu@lzh.de

Nils Haverkamp, Harald R. Telle

Physikalische-Technische Bundesanstalt, Bundesallee 100, 38116 Braunschweig, Germany
Harald.Telle@ptb.de

Abstract: We report on the measurement of an Erbium-fiber oscillator's carrier-envelope-offset frequency using an extruded SF6 photonic crystal fiber for the generation of a more than two octave-spanning supercontinuum from 400 nm to beyond 1750 nm. A modified type of f-2f-interferometer was employed, beating the frequency doubled input signal of the fiber oscillator with the supercontinuum to generate the carrier-envelope-offset beat. Controlling the fiber oscillator's pump power with an electronic feedback loop, we phase-locked the carrier-envelope-offset frequency to an external reference source. The resulting residual phase excursions correspond to fractional frequency instabilities of the oscillator's frequency comb of the order of 10^{-16} for averaging times longer than 10 s.

©2004 Optical Society of America

OCIS codes: (140.3510) Lasers, fiber; (190.4370) Nonlinear optics, fibers

References and links

1. H.R. Telle, G. Steinmeyer, A.E. Dunlop, J. Stenger, D.H. Sutter, and U. Keller, "Carrier-envelope offset phase control: A novel concept for absolute optical frequency measurement and ultrashort pulse generation," Appl. Phys. B **69**, 327-332 (1999).
2. R. Holzwarth, J. Reichert, Th. Udem, T.W. Hänsch, J.C. Knight, W.J. Wadsworth, and P.St.J. Russell, "An optical frequency synthesiser for precision spectroscopy," Phys. Rev. Lett. **85**, 2264–2267 (2000).
3. D.J. Jones, S.A. Diddams, J.K. Ranka, A. Stentz, R.S. Windeler, J.L. Hall, and S.T. Cundiff, "Carrier-envelope phase control of femtosecond mode-locked lasers and direct optical frequency syntheses," Science **288**, 635-639 (2000).
4. J. Stenger, T. Binnewies, G. Wilpers, F. Riehle, H.R. Telle, J.K. Ranka, R.S. Windeler, and A.J. Stentz, "Phase-coherent frequency measurement of the Ca intercombination line at 657 nm with a Kerr-lens mode-locked femtosecond laser," Phys. Rev. A **63**, 021802 (R) (2001)
5. L. Hollberg, C.W. Oates, E.A. Curtis, E.N. Ivanov, S.A. Diddams, T. Udem, H.G. Robinson, J.C. Bergquist, R.J. Rafac, W.M. Itano, R.E. Drullinger, and D.J. Wineland, "Optical Frequency Standards and Measurement," IEEE J. Quant. Elec. **37**, 1502-1513 (2001)
6. R. Kienberger, M. Hentschel, C. Spielmann, G.A. Reider, N. Milosevic, U. Heinzmann, M. Drescher, F. Krausz, "Sub-femtosecond X-ray pulse generation and measurement," Appl. Phys B **74**, S3-S9 (2002)
7. J. Rauschenberger, T. M. Fortier, D. J. Jones, J. Ye, and S. Cundiff, "Control of the frequency comb from a modelocked Erbium-doped fiber laser," Opt. Express 10, 1404-1410 (2002), http://www.opticsexpress.org/abstract.cfm?URI=OPEX-10-24-1404.
8. F. Tauser, A. Leitenstorfer, and W. Zinth, "Amplified femtosecond pulses from an Er:fiber system: Nonlinear pulse shortening and self-referencing detection of the carrier-envelope phase evolution," Opt. Express **11**, 594-600 (2003), http://www.opticsexpress.org/abstract.cfm?URI=OPEX-11-6-594.
9. F.-L. Hong, K. Minoshima, A. Onae, H. Inaba, H. Takada, A. Hirai, H. Matsumoto, T. Sugiura, and M. Yoshida " Broad-spectrum frequency comb generation and carrier-envelope offset frequency measurement by second-harmonic generation of a mode-locked fiber laser," Opt. Lett. **28**, 1516-1518 (2003)
10. N. Haverkamp, H. Hundertmark, C. Fallnich, H.R. Telle "Frequency stabilization of mode-locked Erbium fiber lasers using pump power control," Appl. Phys. B (to be published)

#3694 - $15.00 US Received 23 January 2004; revised 19 February 2004; accepted 19 February 2004

11. V.V. Ravi Kanth Kumar, A.K. George, W.H. Reeves, J.C. Knight, P.St.J. Russell, F.G. Omenetto, and A.J. Taylor: "Extruded soft glass photonic crystal fiber for ultrabroad supercontinuum generation," Opt. Express **10**, 1520-1525 (2002), http://www.opticsexpress.org/abstract.cfm?URI=OPEX-10-25-1520.
12. K. Tamura, E.P. Ippen, H.A. Haus, and L.E. Nelson, "77-fs pulse generation from a stretched-pulse mode-locked all-fiber ring laser," Opt. Lett. **18**, 1080-1082 (1993).
13. H. Hundertmark, D. Kracht, D. Wandt, C. Fallnich, Kumar, A. K. George, J. C. Knight, and P. S. J. Russell, "Supercontinuum generation with 200 pJ laser pulses in an extruded SF6 fiber at 1560 nm," Opt. Express **11**, 3196-3201 (2003), http://www.opticsexpress.org/abstract.cfm?URI=OPEX-11-24-3196.

1. Introduction

Frequency combs based on femtosecond laser sources and highly nonlinear fibers like photonic crystal fibers (PCFs) have opened up new opportunities in fundamental and applied laser science [1-3]. Most of these applications require the control of both comb parameters: the repetition rate f_{Rep} and the carrier-envelope-offset-frequency f_{CEO}. Such stabilized frequency combs will be increasingly used in metrology, especially frequency metrology [4,5] and for efficient high harmonic generation [6].

Most of the research on femtosecond frequency combs has been performed with Ti:Sapphire laser systems operating around 800 nm. Such systems provide laser pulses with appropriate energy and duration for the generation of an octave-spanning supercontinuum enabling the measurement of the f_{CEO}. Recently Er-doped fiber laser systems operating around 1560 nm are moving into the focus of supercontinuum and frequency comb generation. These systems are reliable and compact and thus candidates for routine applications, e. g. reference frequency grids in the telecommunication band or reliable clockworks for optical atomic clocks. It has been demonstrated by various methods that passively mode-locked Erbium fiber lasers generate a defined frequency comb: (i) synchronization of a fiber laser with a stabilized Ti:sapphire system [7] and (ii) measurement of the carrier-envelope-offset-frequency by supercontinuum generation in silica fibers with oscillator-amplifier systems [8,9]. It has been shown, that the pump power of the oscillator is an appropriate control input for either the f_{Rep} [10] or f_{CEO} [7]. For orthogonal control of both comb parameter a second control element, e.g. the cavity length adjustment for repetition rate stabilization, is essential.

In this paper we report the measurement and stabilization of the f_{CEO} of a passively mode-locked Erbium fiber oscillator in a f-2f-interferometer applying a SF6-PCF [11] instead of silica based nonlinear fibers. In contrast to a conventional f-2f-interferometer the use of the SF6-PCF allowed the realization of a modified type of f-2f-interferometer, since the generated supercontinuum spanned over an octave regarding to the oscillator's wavelength. Hence, the frequency doubled signal of the fiber oscillator is superimposed onto the corresponding spectral part of the supercontinuum. Owing to this simplified scheme, only one spectral part of the supercontinuum has to be optimized, which results in a more stable signal-to-noise ratio in contrast to previous schemes. The resulting f_{CEO} beat note was detected by a photodiode and stabilized via pump power control using an electronic feedback loop.

2. Measurement of the carrier-envelope-offset-frequency

The schematic f-2f-interferometer setup for measurement of the f_{CEO} is shown in Fig.1. The Erbium-fiber oscillator was passively mode-locked by nonlinear polarization rotation [12]. The setup was similar to the system described in [13], oscillating at around 1560 nm with a repetition rate of 59.1 MHz and an output power of 14 mW. The pulses were compressible down to 64 fs assuming a Gaussian pulse shape. Behind the oscillator output a fiber-optic polarization isolator was used to protect the oscillator against back reflections. A 50/50-fiber-coupler was integrated for splitting the laser signal into the two interferometer arms which resulted in an average input signal power of 7 mW per arm.

In the first (lower) arm of the f-2f-interferometer the oscillator pulses were amplified to 59 mW using a 1.1 m Erbium-doped fiber and compressed down by an appropriate fiber arrangement to an intensity autocorrelation width of 85 fs, which resulted in a pulse duration of 60 fs assuming a Gaussian shape. These amplified pulses were launched into a 30 cm long

#3694 - $15.00 US Received 23 January 2004; revised 19 February 2004; accepted 19 February 2004
(C) 2004 OSA

extruded SF6-PCF generating a supercontinuum spanning more than one octave from 400 nm to beyond 1750 nm with a pulse energy of about 200 pJ [13]. Since the supercontinuum showed an intensive peak around 800 nm this spectral area was selected for measurement of f_{CEO}.

In the second (upper) arm the laser pulses were compressed by an appropriate fiber arrangement and focussed into a periodically-poled Lithium-Niobate crystal (PPLN) with a domain period of 20,4 µm for second harmonic generation to around 800 nm of the oscillator's pulses. The collimated second harmonic signal had an average power of about 50 µW and propagated through a delay line comprising a sigma path for adjustment of the time delay between the two arms and for proper linear polarization of the laser pulses around 800 nm. This linear polarized signal was superimposed onto the signal from the first arm (50/50-beam splitter) and launched into an 800 nm-single-mode fiber for an optimal detection and spatial filtering.

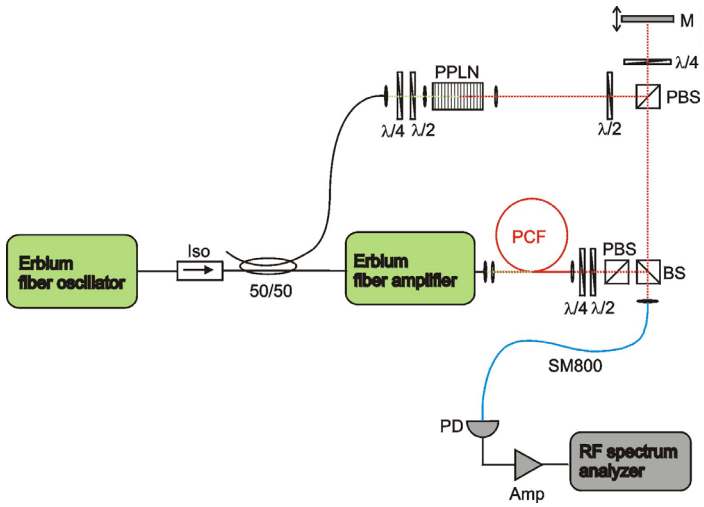

Fig. 1. Schematic setup of the simplified f-2f-interferometer for measurement of the carrier-envelope-offset-frequency: Iso = Faraday isolator; 50/50 = 50/50-fiber coupler; PCF = SF6 photonic crystal fiber; PPLN = periodically poled Lithium-Niobate crystal; PBS = polarizing beam splitter; BS = 50/50-beam splitter; SM800 = single-mode fiber for 800 nm; PD = Silicon PIN photo diode; Amp = 30 dB radio frequency amplifier.

The launched signal from the 800 nm-single-mode fiber was detected by a silicon PIN photo diode and amplified by 30 dB. The resulting electrical signal was analyzed with a radio-frequency (RF) spectrum analyzer. In Fig. 2 a typical scan from 0 MHz to 60 MHz is shown at a resolution bandwidth of 30 kHz. The measured beats of the f_{CEO} were 35 dB above the noise floor at a frequency around 13 MHz and 46 MHz. The intensive narrow peak at a frequency of 59 MHz represents the oscillator's repetition rate of 59.1 MHz. The measured dependence of the f_{CEO} on the pump power [7,8] was about 2 MHz/mW and therefore is of the same order of magnitude as it can be calculated from the pump power dependence of f_{Rep} and a fixed point frequency around 250 THz as reported in [10].

It can be seen, that the carrier-envelope-offset frequency beats are broader than the width of the repetition rate signal. It is assumed, that the higher phase noise in the wings of the CEO-beat results from amplitude noise of the oscillator, which is converted in delay-time variations by nonlinear effects in the arm for supercontinuum generation. A detailed investigation of this noise is in progress.

#3694 - $15.00 US Received 23 January 2004; revised 19 February 2004; accepted 19 February 2004
(C) 2004 OSA

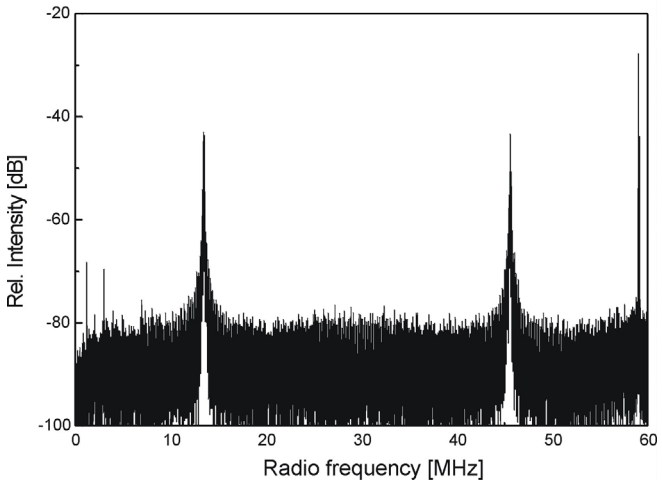

Fig. 2. RF spectrum measured after the 800 nm single-mode-fiber at a resolution bandwidth of 30 kHz. The lower peaks (~ 35 dB about noise floor) at 13 MHz and 46 MHz are the carrier-envelope-offset-frequency beats and the narrow big peak corresponds to the oscillators repetition rate of ~59 MHz.

3. Stabilization of the carrier-envelope-offset frequency

We stabilized the oscillator's f_{CEO} via control of the pump power, see scheme in Fig. 3. The amplified signal was pre-filtered by a band pass filter (~25 MHz) and amplified in a RF amplifier before it was filtered by a phase-locked loop (PLL) tracking oscillator. The tracked signal was divided by a binary divider in order to reduce the required locking bandwidth. The divider's output signal was phase-compared with a RF reference signal (FG) in a double balanced mixer. The resulting error signal was amplified in a low frequency loop amplifier and used for controlling the pump power of the fiber oscillator.

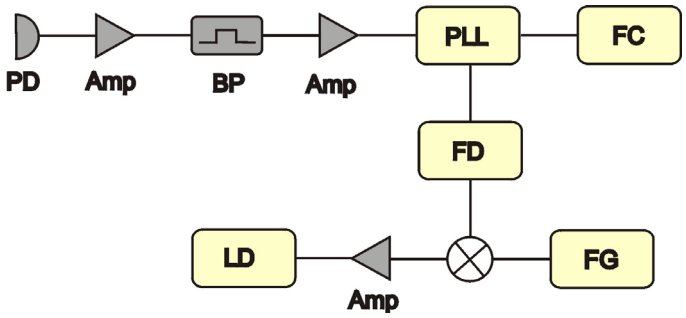

Fig. 3. Schematic setup for measurement and stabilization of the oscillator's carrier-envelope-offset frequency; PD = silicon photo diode; Amp = RF amplifier; BP = band pass filter; PLL = phase-locked loop; FC = digital frequency counter; FD = binary frequency divider; FG = frequency generator; LD = pump diode of oscillator.

For the analysis of the f_{CEO}, the PLL output signal was counted by a digital frequency counter and recorded with a storage oscilloscope. In Fig. 4(A) a typical temporal evolution of the f_{CEO} for the free-running oscillator is shown. Over the measurement time of 50 s (1 s gating time at the frequency counter) the f_{CEO} drifted about 170 kHz, which was primarily induced by thermal changes of the oscillator's environment.

After closing the loop, the f_{CEO} fluctuations were reduced by orders of magnitude, see straight line in Fig. 4(a). The enlarged inset shows fluctuations of only fractions of one Hertz

#3694 - $15.00 US Received 23 January 2004; revised 19 February 2004; accepted 19 February 2004
(C) 2004 OSA

(10 s gating time of the counter) instead of variations of tens of kHz. The digitalization of the remaining fluctuations belonged to the used digital frequency counter. One clearly sees the effect of phase-locking, i.e. the average value f_{CEO} becomes fixed. A long-term stable operation of the servo-loop was achieved for division factors 8, 16 and 32. Although the division factor of 8 allowed a more stable phase-lock, we investigated primary the more comfortable phase-locks with division factors of 16 and 32. Cycle-slip-free operation of the PLL tracking filter was ensured in all cases by monitoring its loop error signal: cycle-slipping of the f_{CEO} lock can be excluded as it would show up as a huge frequency step of several Hz in Fig. 4(b) due to the division factor of 16 used here.

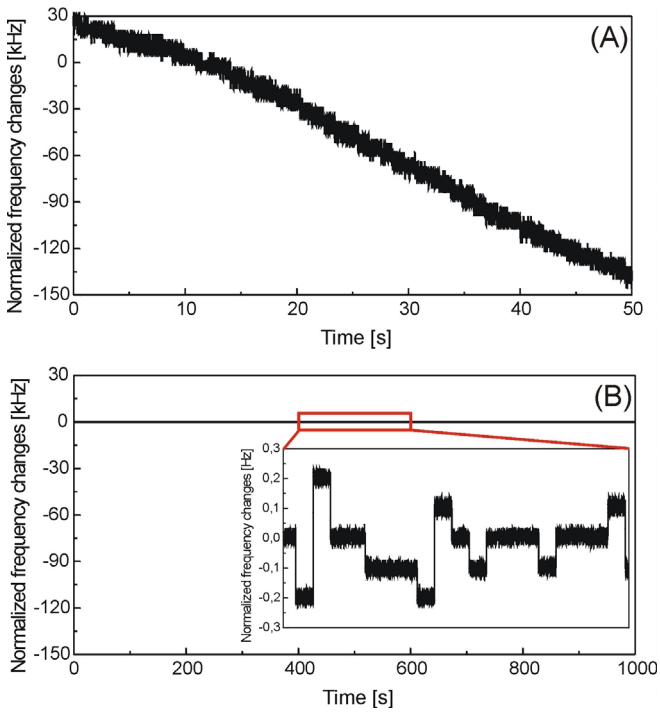

Fig. 4. Temporal evolution of the carrier-envelope-offset frequency: (a) Free-running oscillator with a drift of 170 kHz over 50 s for an averaging time of 1 s; (b) Oscillator with feedback control on the pump power with a division factor of 16; the inset graphic shows on smaller scale the changes for an averaging time of 10 s.

Commonly, frequency fluctuations are described in the time domain in terms of the Allan-Standard-Deviation $\sigma_y(\tau)$ of fractional frequency fluctuations $y=\Delta f/f_0$. Here Δf denotes the frequency deviation as found, for example, in Fig. 4(b). However, since f_{CEO} represents a *virtual* frequency [1], simply inserting it for f_0 into the above mentioned formula yields no physically meaningful quantity. Therefore the definition of the center frequency f_0 requires a more careful consideration depending on the envisioned application. In the following, we will assume the absolute frequency measurement of a frequency standard in the 1.5 µm telecom as application of the self-referenced frequency comb. Then, $\sigma_y(\tau)$ can be defined as a conservative estimate of the achievable short-term instability due to residual f_{CEO} fluctuations. Thus, f_0 has to be chosen about 200 THz in this case since Δf_{CEO} determines the fluctuation of the (as rigid assumed) comb with respect to the frequency origin. Obviously, $\sigma_y(\tau)$ becomes infinitely small for long times with such a phase-lock as long as cycle slips can be avoided.

Figure 5 shows the measured Allan-standard-deviation for averaging times from 1 s to 200 s. As expected, the Allan-standard-deviation decreases as ~1/f from 3×10^{-16} in 1 s to 8×10^{-17} in 200 s. Extrapolating this evolution a vanishing deviation can be achieved for a longer

#3694 - $15.00 US Received 23 January 2004; revised 19 February 2004; accepted 19 February 2004
(C) 2004 OSA

stabilization and larger averaging time. This demonstrates that the phase-lock based on the fiber oscillator's pump power is an appropriate control input for stabilization either the repetition rate - as demonstrated by [10] - or the carrier-envelope-offset frequency.

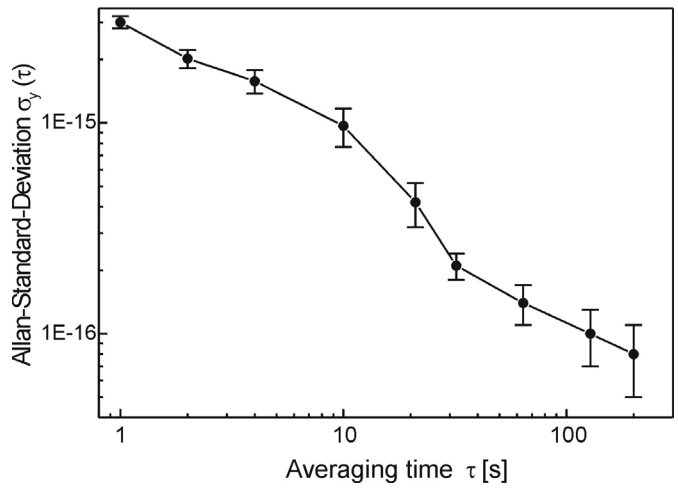

Fig. 5. Standard-Allan-deviation of fractional frequency fluctuations in the optical domain for the stabilized oscillator system.

4. Summary and outlook

We reported on the coherent supercontinuum generation in a 30 cm extruded SF6 photonic crystal fiber [11] with sub-100 fs laser pulses from a passively mode-locked Erbium fiber oscillator-amplifier system [13]. The more than one octave-broad supercontinuum spanning from 400 nm to beyond 1750 nm enabled the measurement of the carrier-envelope-offset frequency, f_{CEO}, of the oscillator's frequency comb with a simplified f-to-2f-interferometer. Using the fiber oscillator's pump power as control input, we demonstrated for the first time a phase-lock of the f_{CEO} of an fiber-based oscillator to an external radio frequency reference. The corresponding fractional frequency instabilities in the fiber oscillator's (optical) comb spectrum are of the order of 10^{-16} for averaging times larger than 10 s.

With the inherent stability of the all-fiber-set-up and the demonstrated control of the carrier-envelope-offset frequency, the Erbium-doped fiber oscillator is becoming the instrument of choice for various demanding applications in the field of metrology as fiber laser systems offer cost effectiveness, long term stability, and turn key operation. In the near future, an Er-fiber oscillator might, for instance, serve as a clock-work for optical atomic clocks. To this end, control of the pump power has to be combined with a second control input, e.g. a fiber stretcher [7], to simultaneously stabilize the repetition rate and the carrier frequency of the Erbium-laser comb generator. Using such a stabilized comb as a clockwork will allow to transfer the excellent short-term stability of optical frequency standards to the radio frequency domain and to distribute the signal over optical fibers in the telecom band.

Acknowledgement

The research was supported by the "Deutsche Forschungsgemeinschaft" in the frame of SFB 407. We gratefully wish to thank V.V. Ravi Kanth Kumar, A.K. George, J.C. Knight and P. St. J. Russell from the University of Bath (Optoelectronics Group, Department of Physics), for the supply of the extruded SF6 photonic crystal fiber enabling the experiments.