A New 7-Transistor SRAM Cell Design with High Read Stability

Yen Hsiang Tseng, Yimeng Zhang , Leona Okamura and Tsutomu Yoshihara
Graduate School of Information, Production and Systems, Waseda University, Fukuoka, 808-0135, Japan
Email: yimeng.zhang@fuji.waseda.jp

***Abstract*—The conventional SRAMs, namely four-transistor SRAM (4T) and six-transistor SRAM (6T), suffered from the external noise, because they have direct paths through bit-line(BL) to their storage nodes. This paper proposes seven-transistor (7T) SRAM which has no direct path through BL to the data storage nodes and has higher endurance against external noise. The proposed cell is composed of two separate data access mechanisms; one is for the read operation and another is for the write one. Based upon our SRAM design, data destruction never occurs in the read operation. Simulation result shows that the read Static-Noise-Margin (SNM) of the proposed cell is enhanced by 1.6X and 0.31X with the conventional 4T and 6T SRAM cell respectively. We also manufactured a chip and confirmed its performance.**

***Keywords*—Static Random Access Memory (SRAM); Static Noise Margin (SNM)**

I. INTRODUCTION

With the advantages of high speed and ease of use, static random access memory (SRAM) has been widely used in system-on-chips (SoC). According to the International Technology Roadmap for Semiconductors (ITRS) forecast, memory is going to occupy 90% of the SoC area by 2013 [1]. It leads that the performance of SoC is going to be increasingly apt to rely on performance of SRAM. We need a new SRAM cells to satisfy the demands of forthcoming SoC performance.

There are two reasons why the conventional SRAM cells are not sufficient: Firstly, as technology advance, the supply voltage and threshold voltage decrease in the new manufacturing process, and it deteriorates SRAM's stability. Secondly, external noise easily destroys the data of conventional SRAM cells, because there are direct access paths from bit-line (BL) to the storage node of the conventional SRAM cells in the read operation mode.

Based on the above two reasons, the high stability of SRAM cell design is essential. Therefore, we propose a new SRAM cell which has high stability enough to satisfy forthcoming SoC performance. Our proposed SRAM architecture is based on the conventional 4T SRAM cell. We discuss in detail why the 4T structure is chosen in the section II.

The rest of this paper is organized as follows: In Section II, we introduce the conventional SRAM and the reason why their stability becomes lower when the CMOS technology develops. In Section III, we present the proposed 7T SRAM cell which has high read stability. The read, write and standby cycles will be also described. In Section IV, the simulation results and the performance comparisons are given. Finally, Section V concludes this paper.

II. THE CONVENTIONAL SRAM CELL

In this section, at first, we introduce the commonly-used indicators to evaluate SRAM's characteristics. In the next, we show the general characteristics of conventional SRAM cells using the indicators. At last, the reason why the conventional SRAM cell structures are not acceptable in the forthcoming high-performance SoCs is given.

A. Indicators to evaluate SRAM's characteristics

There are four indicators to evaluate SRAM's characteristics: (1) static noise margin (SNM) [V], (2) power consumption [Watt], (3) cell current [μA/cell], (4) cell area [μm^2]. Static noise margin (SNM) is the standard method to measure the read stability of a SRAM cell.

B. Basic characteristics of conventional SRAM cell

Conventional SRAM cells are mainly classified into two groups; 6T SRAM cell and 4T SRAM cell which are shown in Fig.1 and Fig.2, respectively. TABLE I summarizes the general characteristics of 6T and 4T SRAM cells: In a 4T SRAM cell, PMOS transistors P1 and P2 serve as access transistors as opposed to NMOS transistors N3 and N4 in a 6T SRAM cell. Due to the mobility ratio of the NMOS to the PMOS transistors $\mu_n = \mu_p$ which is usually around two to three, all the transistors in a 4T SRAM cell can be of minimal size[2]. While a 6T SRAM cell must to guarantee a non-destructive read operation, NMOS driver transistors N1 and N2 must be 1.5-2.5 times larger than NMOS access transistors N3 and N4[2].

6T SRAM cell has higher data retention than 4T SRAM cell has, at the expense of area and power consumption. In general, recent SoCs employ 6T SRAM cell in order to enjoy its advantages. On the other hand, our proposed SRAM cell which is introduced in section III is based on 4T SRAM cell, because 4T SRAM cell's power consumption is 29% lower than that of 6T SRAM cell using 0.18−μm CMOS technology[3]. Besides, for the same access speed and comparable SNM, the area of a 4T SRAM cell is 50-65% of the area of a conventional 6T SRAM cell[2].

TABLE I
COMPARISON OF CONVENTIONAL 6T AND 4T SRAM CELLS

	6T-SRAM cell	4T-SRAM cell
Norm. SNM	1.22	1
Norm. power [3]	1.41	1
Norm. access speed [3]	1.41	1
Norm. area [2]	2	1

C. *Flaw of conventional SRAM cell in miniaturized process*

The SNM of 6T and 4T SRAM cells will be decreased to insufficient level in the miniaturized process, because the external noise level becomes relatively larger as the power source voltage V_{DD} becomes smaller. As shown in Fig.1 and Fig.2, both of 6T SRAM cell and 4T SRAM cell have a direct path from BL to storage node in read operation mode; when the access transistor is on, BL and storage node are directly connected. So the external noise easily destroys the datum. We get rid of this path direct path from our proposed SRAM cell in order to improve stability against external noise.

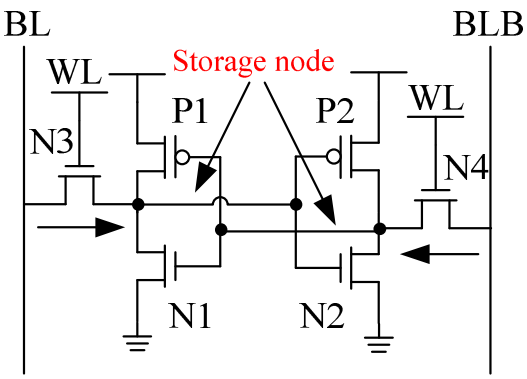

Fig. 1. A conventional 6T SRAM cell.

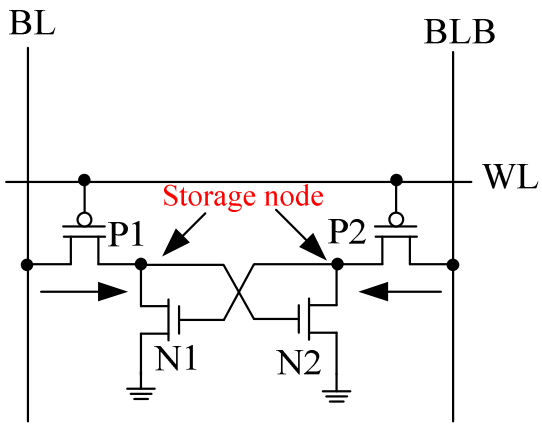

Fig. 2. A conventional 4T SRAM cell.

III. PROPOSED 7T SRAM CELL

In this section, we propose a new 7T SRAM cell which provides high read stability. Fig.3 shows the proposed cell. The reading path and writing path of this cell are independent and never interfere mutually. NMOS transistors N1 and N2 form a latch and keep the datum. N3, N4 and N5 are read access transistors. PMOS transistors P1 and P2 are write access transistors. Due to our structure is based on the 4T SRAM cell, all the transistors in a 7T SRAM cell can be of minimal size. As a result, the area of 7T SRAM cell is smaller than that of 6T SRAM cell. We discuss the write, read and standby cycles in more detail in the subsections III-A, III-B and III-C, respectively.

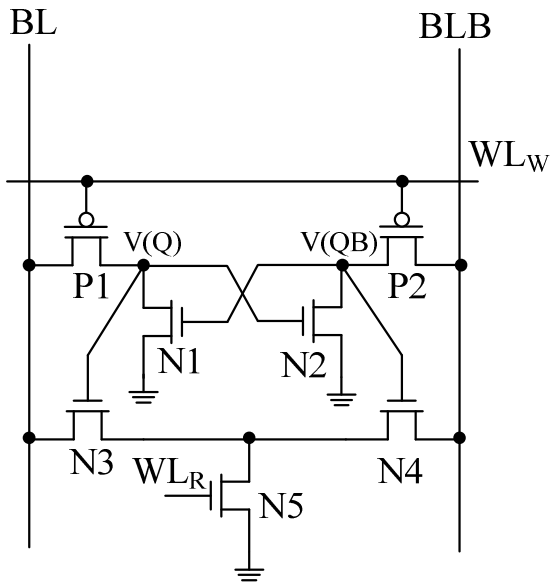

Fig. 3. Proposed 7T SRAM cell

A. *Write Cycle*

To write "1" to the storage node V_Q ("0" to V_{QB}, simultaneously), at first, BL and BLB are respectively charged and discharged. In the next, WL_W is set to low to turn P1 and P2 on, while WL_R is maintained at a low voltage to keep N5 off. V_Q is charged up to high-level by BL through P1, while V_{QB} is discharged to low-level by BLB through P2. When V_Q is charged sufficiently, set WL_W to high and turn P1 and P2 off. In contrast, to write "0" to the node V_Q ("1" to V_{QB}, simultaneously), BL and BLB are discharged and charged, respectively.

B. *Read Cycle*

Given that V_Q stores "1", at first, WL_W is set to high to turn P1 and P2 off, while WL_R is maintained at a high voltage to keep N5 on, BL is discharged through N3 and N5. Whereas BLB stays high because N4 insulates BLB from the GND. The storage nodes V_Q and V_{QB} completely decouple the datum from the BL during a read operation.

In contrast, when V_Q stores "0", as long as turning P1 and P2 off, and turning N5 on, the BLB is discharged through N4 and N5.

The read operation of the proposed SRAM cell is different from that of the 6T and 4T SRAM cells. In 7T SRAM cell, reading path is separated from writing path. Reading datum does not interfere the storage nodes. Besides, the voltage of the storage node, which stores "0", is closely maintained at the ground level during a read operation. Therefore, the 7T SRAM cell has higher endurance against external noise.

C. *Standby Cycle*

Due to our structure is based on the 4T SRAM cell, the 7T SRAM cell has the same problem with 4T one which is the "H" node data potential is gradually lost by the leakage current through N1 or N2, this current is named I_{leak}, as shown in Fig.4. To prevent from losing the datum, we employ the method to retain the datum by other

leakage current which flows through P1. This current is named $I_{retention}$. To let $I_{retention}$ flow through P1 or P2, BL and BLB are kept "H" during standby cycle. WL_W is set to "H" to turn P1 and P2 off. To retain "H", it is required that $I_{retention} \geq I_{lleak}$. As I_{leak} varies largely by manufacturing variation, we usually design $I_{retention}$ so that it is more than hundred times of I_{leak} [4].

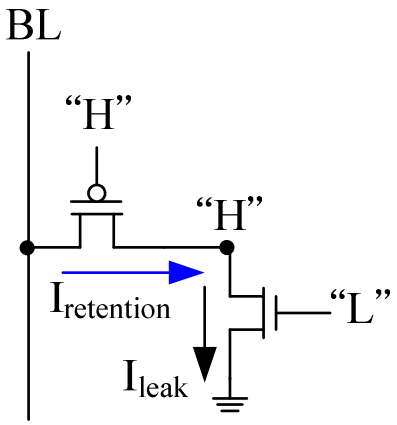

Fig. 4. The data retention in the standby cycle.

The advantage of our SRAM cell is providing the stable operations, and improving the higher SNM than the conventional 4T and 6T SRAM cells do. While the drawback of our SRAM cell is the problem of bitline capacitance. In general, the bitline capacitance is composed of the metal capacitance of the bitline and the drain capacitance of the pass transistors of memory cells. Because our separate data-reading access mechanism, the 7T SRAM have greater metal capacitance of the bitline and higher bitline parasitic capacitance as compared to the 4T and 6T SRAM cells.

IV. Simulation Results

The simulation results of SRAM cells are demonstrated in this section with the emphasis on the read stability. These circuits are implemented by TSMC (Taiwan Semiconductor Manufacturing Company) 1-Poly 6-Metals 0.18-μm CMOS process. Fig.5 shows that the illustrated waveforms of write and read operations are with correct operation. The chip area with pads is 0.958 * 0.923 mm^2 with 128bit including the peripheral circuits. The whole chip layout and the physical layout of the proposed 7T SRAM cell are shown in Fig.6 and in Fig.7, respectively. TABLE II shows that the manufacturing process, power supply voltage, power consumption and the duration tests are Write1delay, Write0delay, and Read0delay.

TABLE II
PRE-LAYOUT SIMULATION RESULTS OF THE SRAM CELL

Process technology	1P6M CMOS 180nm
Power supply voltage	1.8V
Write1delay	33.45ps
Write0 delay	62.93ps
Read 0 delay	33.35ps
Power consumption	18.51μw with 128 bit cells

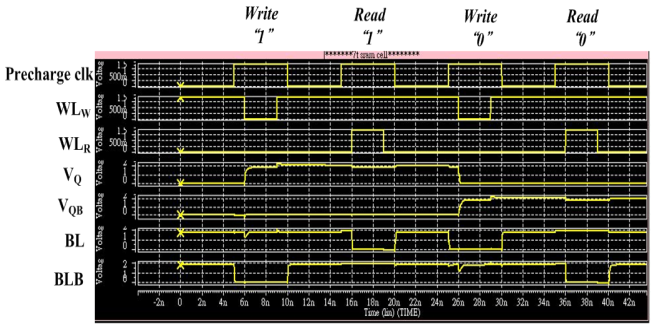

Fig. 5. The waveforms of write/read operation of 7T SRAM cell.

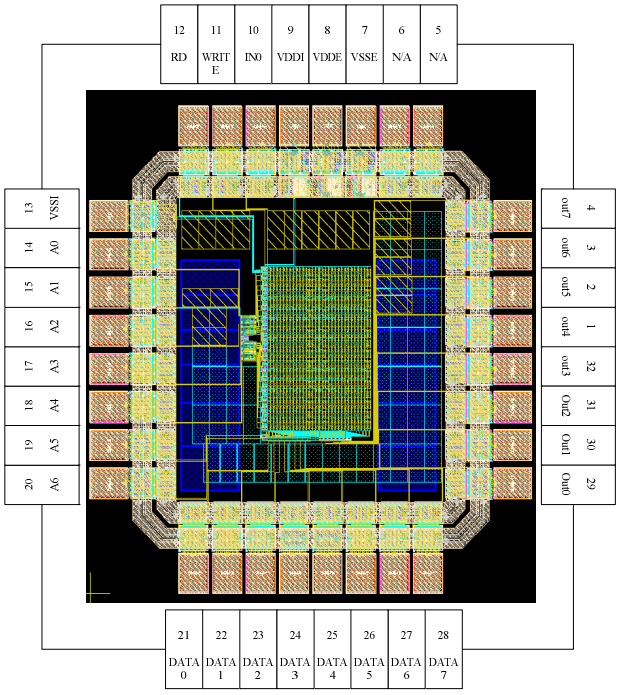

Fig. 6. The whole chip layout view of the proposed 7T SRAM.

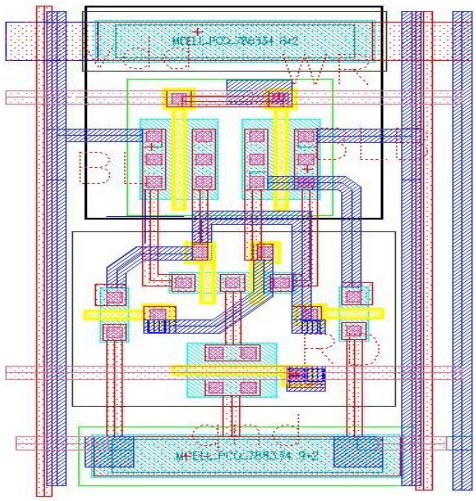

Fig. 7. The physical layout view of the proposed 7T cell.

For the read stability of SRAM, static noise margin (SNM) is the standard method to measure the read stability of a SRAM cell. It can be measured graphically from the butterfly graph. The butterfly graph is a plot of the inverter characteristics of the SRAM cell [5]. Although, several definitions of the SNM can be found in the current textbooks, one standard SNM definition is not commonly used yet. According to [2], the SNM of a load-less SRAM cell as the diagonal of the rectangle with the sides equal to the noise margin high (NM_H) and the noise margin low (NM_L), as shown in Fig.8. NM_H and NM_L are defined as Equations 1 and 2, respectively:

$$NM_H = V_{OH} - V_{IH} \quad (1)$$
$$NM_L = V_{IL} - V_{OL} \quad (2)$$

where V_{IL} is the maximum input voltage level recognized as logical 0, V_{IH} is the minimum input voltage level recognized as a logical 1, V_{OL} is the maximum logical 0 output voltage, V_{OH} is the minimum logical 1 output voltage. The SNM expression can be presented as:

$$SNM_{load_lessSRAM} = \sqrt{NM^2_H + NM^2_L} \quad (3)$$

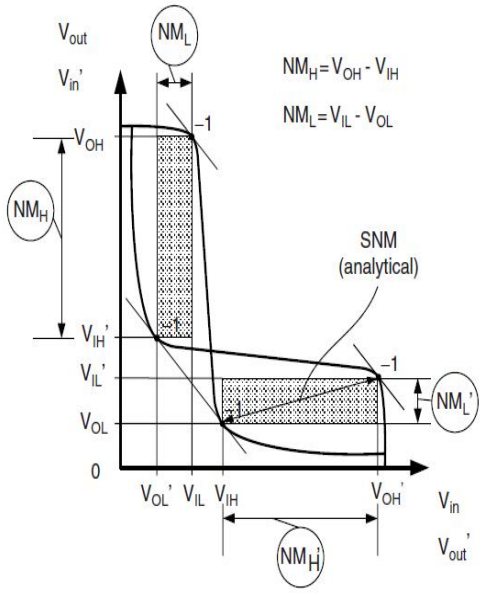

Fig. 8. SNM definition used in the analytical SNM expression for load-less SRAM cell[2].

Fig.9 and Fig.10 show the butterfly curves for the conventional 4T SRAM cell and 6T SRAM cell respectively. Fig.11 shows the butterfly curves for our proposed 7T SRAM cell, whose the operating environment is at cell V_{DD} = 1.8 V and temperature T = 25˚C, given Typical, Typical (TT) model. Our simulation results show that the read SNM of the proposed circuit is up to 1.43V, while that of the conventional 4T and 6T SRAM cell is 0.55 V and 1.09 V respectively. Our design enhances the SNM by 1.6X and 0.31X as compared to the conventional 4T SRAM cell and 6T SRAM cell respectively.

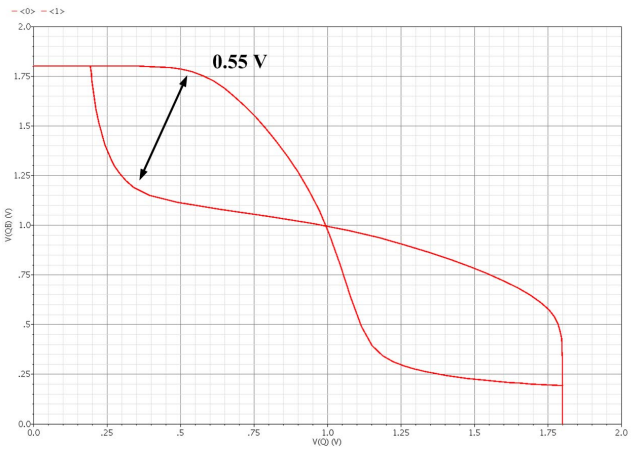

Fig. 9. The SNM curve of the 4T SRAM cell, given TT model, T = 25˚C, V_{DD} = 1.8 V.

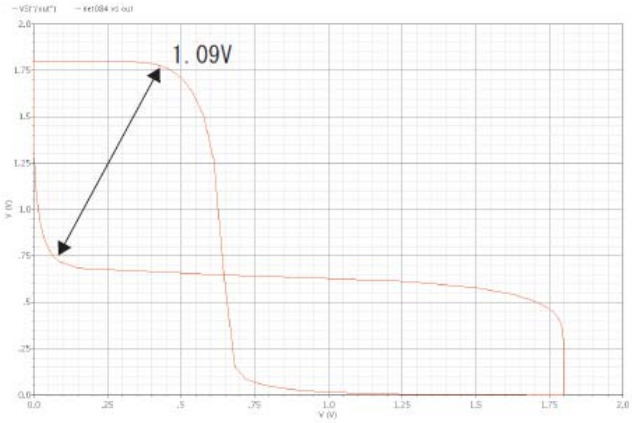

Fig. 10. The SNM curve of the 6T SRAM cell, given TT model, T = 25˚C, V_{DD} = 1.8 V.

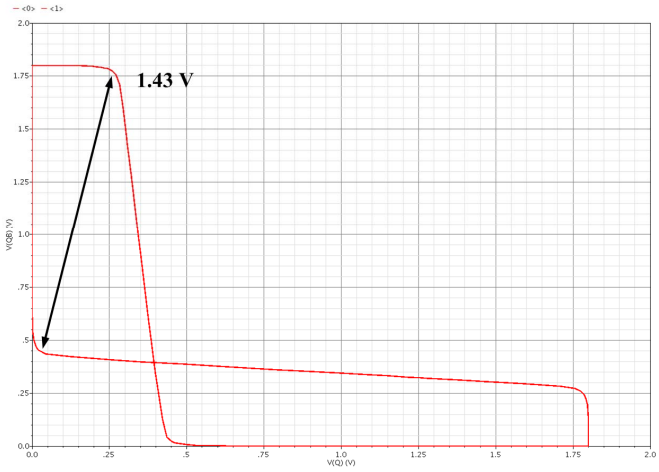

Fig. 11. The SNM curve of the 7T SRAM cell, given TT model, T = 25˚C, V_{DD} = 1.8 V.

V. CONCLUSION

We propose a new SRAM cell, which offers high stability for read operations. The new 7T SRAM cell is consisted of two separate data access mechanisms; one is for the read operation and another is for the write one. In particular, the design of our SRAM cell does not disturb the storage node during the reading operation. The SRAM cell is simulated in 0.18µm CMOS technology.

The Read SNM is as high as 1.43V at V_{DD} = 1.8 V. It is found that the Read SNM is significantly enhanced by 1.6X and 0.31X as compared to the conventional 4T and 6T SRAM cell respectively.

REFERENCES

[1] International Technology Roadmap for Semiconductors 2005. http://www.itrs.net/Links/2005ITRS/Home2005.htm.

[2] Andrei Pavlov and Manoj Sachdev. *CMOS SRAM Circuit Design and Parametric Test in Nano-scaled Technologies*. Springer, 2008.

[3] K. Noda, K. Matsui, K. Takeda, and N. Nakamura. "A loadless CMOS four-transistor SRAM cell in a 0.18-gm logic technology". *Electron Devices, IEEE Transactions on*, 48(12):2851–2855, Dec 2001.

[4] K. Takeda, Y. Aimoto, N. Nakamura, H. Toyoshima, T. Iwasaki, K. Noda, K. Matsui, S. Itoh, S. Masuoka, T. Horiuchi, et al. "A 16-Mb 400-MHz loadless CMOS four-transistor SRAM macro". *IEEE Journal of Solid-State Circuits*, 35(11):1631–1640, 2000.

[5] J. Yang and L. Chen. "A New Loadless 4-Transistor SRAM Cell with a 0.18 μm CMOS Technology". In *Electrical and Computer Engineering, 2007. CCECE 2007. Canadian Conference on*, pages 538–541, 2007.