Self-Coherent Multisymbol Detection of Optical Differential Phase-Shift Keying

Moshe Nazarathy, *Senior Member, IEEE*, Xiang Liu, *Senior Member, IEEE*, Louis Christen, *Member, IEEE*, Yannick K. Lize, *Student Member, IEEE, Student Member, OSA*, and Alan E. Willner, *Fellow, IEEE, Fellow, OSA*

***Abstract*—This paper treats the recently emerging self-coherent multisymbol decision-feedback-aided detection techniques for optical differential phase-shift keyed (DPSK) transmission based on both an optical preprocessing approach and an electronic postprocessing approach. We present in detail i) the generation of a synthetic low phase-noise effective local oscillator out of the modulated optical data itself, and its estimation theory interpretation; ii) the role of polyphase (interleaved) DPSK in the optical preprocessing approach in easing the decision feedback realization requirements; iii) detection of M-ary DPSK modulation formats for general M, and differential quadrature phase-shift keying in particular; iv) three alternative integrated-optoelectronic receiver implementations for the optical preprocessing approach detailing the structures of the interferometric front-end and the high-speed electronic analog and digital building blocks; and v) the principle, and alternative implementations, of the digital postprocessing approach to self-coherent detection. We finally compare the capabilities of the emerging self-coherent detection and digital coherent detection techniques.**

***Index Terms*—Coherent communication, decision feedback, differential phase-shift keying (DPSK), integrated optics, multisymbol DPSK, optical communication, phase modulation.**

I. Introduction

UPON considering the possible benefits of coherent optical technology , an uneasy tradeoff stands out between its sensitivity and selectivity benefit versus its complexity of realization. It would be advantageous to develop differential transmission techniques approaching the receiver sensitivity of coherent detection, yet with substantially lower complexity, marginally exceeding that of conventional differential phase-shift keying (DPSK) [1]. We have recently introduced several novel detection architectures, referred to here as *self-coherent,* approaching coherent performance [2]–[6] yet incurring implementation complexity between that of a full coherent and a DPSK direct detection system by using more complex optical front-ends entailing delay interferometers (DIs) with multiple delays. Related schemes using conventional DIs together with *analog* [7]–[9] or *digital* [9]–[11] electronic postprocessing, can also be characterized as *self-coherent.* Furthermore, the experimental demonstrations of these schemes [11], [5] have shown the potential to compensate for transmitter, receiver, and channel impairments, thereby behaving in a similar manner to more traditional error-correction codes.

The self-coherent (SC) terminology indicates that an accurate phase reference is synthesized from the signal itself without additionally requiring a physical phase-locked optical local oscillator (LO) light source. Remarkably, the new designs approach the sensitivity advantage of coherent detection while avoiding the excessive complexity associated with the LO laser. The high-quality synthetic LO is extracted from the received optical signal by averaging over prior symbols that are randomly modulated, yielding a beneficial phase-noise reduction effect through a linear combination of these previous symbols. The key for synthesizing an improved LO is to remove the data modulation on the past symbols through decision feedback (DF), e.g., by controlling the DIs in the optical preprocessing approach. This principle of operation is illustrated in Fig. 1, along with graphical and mathematical descriptions of the key process of aligning earlier complex symbols at discrete times $k-2, k-3, k-4, \ldots$, which participate in synthesizing an effective LO (improved phase reference) along with the previous symbol at time $k-1$. Data removal or phase realignment is performed by means of complex rotations using decision feedback, such that the rotated symbols become collinear with, and reinforce, the reference symbol at time $k-1$ as indicated. The resulting sum is an effective LO acting as an improved phase reference with reduced phase noise, applied to the "self-coherent" detection of the current symbol at time k.

Notably, the SC principle pertains to differential phase shift-keyed transmission over a window comprising multiple (> 2) symbol intervals, referred to as *chips* (a "chip" being the regular baud interval over which the phase of the transmitted optical signal stays constant). Similar multisymbol DPSK (MS-DPSK) [12] decision-feedback-aided multisymbol phase estimation techniques [13]–[15] have been earlier considered in the wireless communication domain; however, their porting to optical communication is nontrivial, essentially due to the unavailability of phase information in the square-law detection process. Note that some special forms of MS-DPSK were realized without DF [16]–[18], albeit at the expense of implementation complexity.

The DF SC MS-DPSK alternative optical receiver structures may be shown to be mathematically equivalent with the seemingly different abstract wireless receiver structures [13]–[15].

Manuscript received February 23, 2007; revised July 20, 2007. Published August 29, 2008 (projected).

M. Nazarathy is with the Electrical Engineering Department, Technion–Israel Institute of Technology, Haifa 32000, Israel (e-mail: nazarat@ee.technion.ac.il).

X. Liu is with Alcatel-Lucent, Bell Laboratories, Holmdel, NJ 07733 USA (e-mail: xliu20@alcatel-lucent.com).

L. Christen and A. Willner are with the Electrical Engineering Department, University of Southern California, Los Angeles, CA 90007 USA (e-mail: lchrist@usc.edu).

Y. K. Lize is with ITF Laboratories, Montreal, QC H4N 2G7, Canada (e-mail: yklize@itflabs.com).

Digital Object Identifier 10.1109/JLT.2007.912055

0733-8724/$25.00 © 2008 IEEE

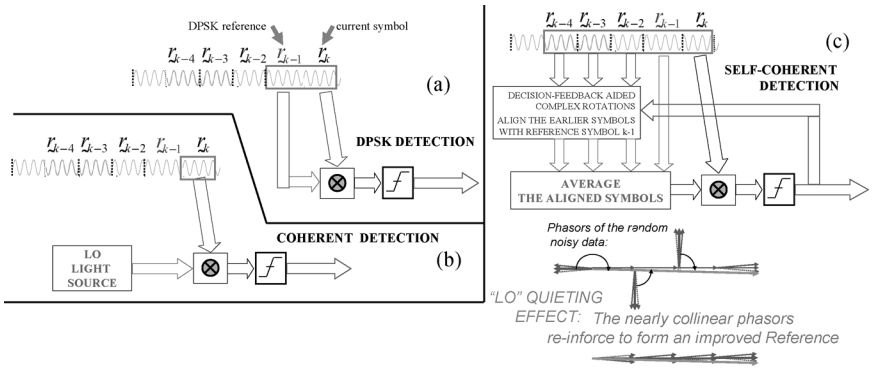

Fig. 1. Principle of operation of self-coherent detection: (a) DPSK (differential phase) detection. (b) Coherent detection. (c) Novel self-coherent detection.

However, the processing required in the wake of square-law detection, the various optical and electronic realizations, and the interpretation of the improved reference phase estimation as self-coherent gain are novel contributions.

Two main SC system architectures (in turn partitioned into subarchitectures) have emerged, respectively corresponding to preprocessing in the optical domain versus postprocessing in the electronic (digital) domain. The *electronic postprocessing* systems introduced in [7]–[11] under the name *multisymbol phase estimation* (MPSE) have the advantage of using conventional DI(s) but require heavier electronic high-speed DF processing, either analog [7]–[9] or digital [11]. In contrast, the *optical preprocessing* architectures introduced in [2]–[4] under the name multichip[1] DPSK (MC-DPSK) require more complex DI devices accomplishing most of the DF processing directly in the optical domain while reducing the complexity of the DIs in the electronic domain (which nevertheless is still somewhat more complex than for conventional DPSK). A related *recursive* SC detection system was introduced in [19] based on a recirculating delay line.

This paper is mainly devoted to *nonrecursive optical preprocessing* realizations of the self-coherent principle. Synthetic LO generation is interpreted in terms of estimation theory as well as accounting for it intuitively as a phase-noise reduction by an averaging effect over multiple symbols. The brief differential binary phase-shift keying (DBPSK) treatments in [2]–[6] are extended to the more complex differential quadrature phase-shift keying (DQPSK) and, more generally, M-ary DPSK (e.g., 8-PSK) modulation formats. Alternative preprocessing SC architectures and their tradeoffs are compared. In Section II, we review a "polyphase" interleaved version of conventional DPSK. The SC principle is explained in Section III, rigorously modeling the attainable self-coherent gain, i.e., the reduction of phase noise power entailed in the process of synthetic LO generation. Section IV explains the beneficial effect of polyphase operation on easing the DF requirements and provides an overview of the alternative integrated-optoelectronic realizations, which are detailed and compared in Sections VI and VII. For completeness, the electronic postprocessing approach is briefly discussed in Section VIII. The final section compares the pros and cons of the emerging self-coherent versus the digital coherent detection techniques.

[1]We revert in this paper to the more conventional term *multisymbol DPSK*.

II. Polyphase DPSK

In preparation of our treatment of self-coherent DPSK detection, let us first review conventional differential phase detection in a slightly generalized form referred to here as *polyphase* DPSK (P-DPSK). This variant of DPSK increases the delay in the differential encoder of the DPSK *transmitter* (TX), as well as in the *receiver* (RX) processing, from T_s to $T \equiv d \cdot T_s$, where T_s is the symbol duration (i.e., the symbol or baud rate is T_s^{-1}), T is called the *polyphase period,* its inverse T^{-1} is called the *polyphase rate,* and d is an integer called *interleaving factor*. Possible motivations for conventional P-DPSK [20]–[24] include:

i) enabling polarization alternation or interleaving, whereby adjacent symbols are transmitted with orthogonal alternating polarizations, e.g., all even samples are x-polarized, whereas all odd samples are y-polarized to reduce the nonlinear intrachannel FWM and XPM penalty due to XPM-induced nonlinear polarization rotation;
ii) to allow polarization multiplexing of two independent (even and odd) DPSK streams;
iii) to enable optical time-division multiplexing of DPSK modulated streams.

Our main motivation for adopting polyphase operation is different (though, as a side benefit, we should be able to accommodate the objectives above as well): we aim to ease the DF delay requirements, enabling past decisions to be fed back in a timely manner (Section IV).

Establishing our notation, let discrete-time samples at the baud rate T_s^{-1} be indexed by brackets, e.g., $q[k-1]$, $q[k]$ are taken T_s seconds apart, whereas samples taken at the slower polyphase rate T^{-1} are indexed by subscripts, e.g., $\tilde{A}_{k-1}$, $\tilde{A}_k$ are taken $T \equiv dT_s$ apart. Evidently, there are d distinct subsequences interleaved at the polyphase rate

$$\tilde{A}_n = \tilde{A}[nd+i],\ i = 0, 1, \ldots, d-1. \tag{1}$$

We distinguish between real and complex samples by denoting the complex samples by overtildes. The *differential precoder* in the P-DPSK transmitter is then modeled as a multiplicative accumulator over the M-ary PSK constellation

$$\tilde{a}_k = \tilde{a}_{k-1}\tilde{s}_k \Leftrightarrow \mu_k = \mu_{k-1} + \Delta\mu_k \tag{2}$$

where μ_k are the transmitted phases, $\tilde{a}_k \equiv e^{j\mu_k}$ are called *angular states,* and $\tilde{s}_k \equiv e^{j\Delta\mu_k}$ are called *rotation symbols,* viewed as the information symbols mapped by the transmitted bits, and $\Delta\mu_k \equiv \mu_k - \mu_{k-1}$ are the *phase differences* selected along with the phases μ_k out of a M-PSK constellation

$$\mu_k, \Delta\mu_k \in \left\{\frac{2\pi m}{M}\right\}_{m=0}^{M-1},\ \tilde{a}_k, \tilde{s}_k \in \{e^{j2\pi m/M}\}_{m=0}^{M-1}. \quad (3)$$

The differential precoder generates the current angular state $\tilde{a}_k$ by multiplicatively applying the rotation symbol $\tilde{s}_k$ onto the previous angular state, $\tilde{a}_{k-1}$, e.g., for $d = 2$, the differential phase generation is decoupled over the even and odd baud intervals (with an obvious generalization for d polyphases)

$$\tilde{a}[2n] = \tilde{a}[2n-2]\tilde{s}_{2n},\ \ \tilde{a}[2n+1] = \tilde{a}[2n-1]\tilde{s}_{2n+1}. \quad (4)$$

The transmitted symbol is then simply a scaled version of the angular state $\tilde{A}_k = A_c\tilde{a}_k$, with A_c the optical carrier amplitude. We also introduce a *cumulative rotation increment* over an interval $[k-m, k-1]$ of duration $(m-1)T$

$$\tilde{s}_{[k-m,k-1]} \equiv \tilde{s}_{k-m+1}\tilde{s}_{k-m+2}\cdots\tilde{s}_{k-1} = \prod_{l=1}^{m-1}\tilde{s}_{k-m+l} \quad (5)$$

rotating from the initial to the final transmitted phasors

$$\tilde{A}_{k-1} = \tilde{A}_{k-m}\tilde{s}_{[k-m,k-1]}. \quad (6)$$

The effective discrete-time optical channel from the TX to the optically preamplified samples at the RX input is modeled as $\tilde{r}_k = \tilde{A}_k e^{j\varphi_k} + \tilde{n}_k$, where $\tilde{n}_k$ is amplified spontaneous noise (ASE)-induced circular Gaussian additive noise of variance $2\sigma^2$ and φ_k represents the *phase noise* (PN) accrued by each received sample, either due to the source (laser PN) or nonlinear SMP- or XMP-induced PN.

The noise processes $\tilde{n}_k$, and in certain cases φ_k, are assumed white and independent of each other. Over a linear optical channel, $\varphi_k \equiv \theta \sim Unif[0, 2\pi]$, i.e., $\tilde{r}_k = \tilde{A}_k e^{j\theta} + \tilde{n}_k$.

The maximum likelihood (ML) decision (optimal over a linear channel) at the RX is described by

$$\hat{\alpha} = \arg\max w_k^{(\alpha)} \quad (7)$$

$$\begin{aligned} w_k^{(\alpha)} &\equiv \mathrm{Re}\left\{\tilde{r}_k\tilde{r}_{k-1}^* e^{-j\Delta\mu_k^{(\alpha)}}\right\} = \mathrm{Re}\left\{\tilde{q}_k\tilde{s}_k^{(\alpha)*}\right\} \\ &= |\tilde{r}_k|\,|\tilde{r}_{k-1}|\cos\left(\angle\tilde{r}_k - \angle\tilde{r}_{k-1} - \Delta\mu_k^{(\alpha)}\right) \end{aligned} \quad (8)$$

where α is the transmission index. The sufficient statistic $\tilde{r}_k\tilde{r}_{k-1}^*$ is optically generated in the RX *interferometric front end* (IFE). Generally denote by DI$[mT, \gamma]$ an asymmetric Mach–Zehnder (MZ) balanced-detection DI [25] with relative phase bias γ between the two arms and relative delay mT (the multiple of T will be later required for multisymbol detection). The electrical output of such device at discrete time k, in response to an input field sample $\tilde{r}_k$, is expressed up to a constant as

$$\tilde{q}_{mT}^{(\gamma)re}[k] \equiv \mathrm{Re}\left\{\tilde{r}_k\tilde{r}_{k-m}^* e^{j\gamma}\right\}. \quad (9)$$

Similarly, the output of a DI biased in quadrature is expressed as

$$\begin{aligned} \tilde{q}_{mT}^{(\gamma-\pi/2)re}[k] &= \mathrm{Re}\left\{\tilde{r}_k\tilde{r}_{k-m}^* e^{j(\gamma-\pi/2)}\right\} \\ &= \mathrm{Im}\left\{\tilde{r}_k\tilde{r}_{k-m}^* e^{j\gamma}\right\} = \tilde{q}_{mT}^{(\gamma)im}[k] \end{aligned} \quad (10)$$

where re, im denote real and imaginary parts and the pair of quadrature DIs, defining a "complex DI" with output

$$\tilde{q}_{mT}^{(\gamma)}[k] \equiv \tilde{r}_k\tilde{r}_{k-m}^* e^{j\gamma}. \quad (11)$$

We adopt for brevity a notational convention often omitting the bias phase superscripts but indicating the presence of nonzero bias phases $\gamma \neq 0$ by a prime, writing $\tilde{q}'_{mT}[k]$, with γ assumed to be implicitly specified. Unprimed quantities such as $\tilde{q}_{mT}[k]$ denote the output of a zero-phase-biased DI.

A. DBPSK

The IFE of a conventional P-DBPSK contains a single DI[T,0] device generating $\tilde{q}_T^{re}[k] = \mathrm{Re}\left\{\tilde{r}_k\tilde{r}_{k-1}^*\right\}$. The DBPSK rotation symbols are now real-valued, $s_k = \pm 1$, and the ML decoding law reduces to $\hat{s}_k = \mathrm{sgn}\tilde{q}_T^{re}[k]$.

B. DQPSK

The decision statistic (8) in the ML decoding law (7) may be equivalently expressed as

$$w_k^{(\alpha)} \equiv \mathrm{Re}\left\{\tilde{q}_k\tilde{s}_k^{(\alpha)*}\right\} = \mathrm{Re}\left\{\tilde{q}'_k\tilde{s}'^*_k\right\} \quad (12)$$

$$\begin{aligned} \tilde{q}_k &\equiv q_T[k] \\ &\equiv \tilde{r}_k\tilde{r}_{k-1}^*, \tilde{q}'_k \equiv e^{j\pi/4}\tilde{q}_k = e^{j\pi/4}\tilde{r}_k\tilde{r}_{k-1}^* = q'^{re}_k + jq'^{im}_k. \end{aligned} \quad (12a)$$

Here $\tilde{s}'_k \equiv \tilde{s}_k^{(\alpha)}e^{j\pi/4} \in (\pm 1 \pm j)/\sqrt{2}$ are rotation symbols in a 45°-tilted QPSK constellation with the transmission index α discarded off $\tilde{s}'_k$. The decoding is then formulated as maximization of (12) over the tilted constellation, reducing to decisions on the signs of the re-im parts of $\tilde{q}'_k$:

$$\hat{\tilde{s}}'_k = \frac{\left[\mathrm{sgn}q'^{re}_k + j\,\mathrm{sgn}q'^{im}_k\right]}{\sqrt{2}}. \quad (13)$$

The decision variables q'^{re}_k, q'^{im}_k are interferometrically generated by means of a pair of DI$[T, \pm\pi/4]$, devices, phase-biased at $\pm 45°$, with delay T equal to the polyphase period

$$\begin{aligned} \tilde{q}_T^{re}[k] &= \mathrm{Re}\left\{\tilde{r}_k\tilde{r}_{k-1}^* e^{j\pi/4}\right\} \\ \tilde{q}_T^{im}[k] &= \mathrm{Re}\left\{\tilde{r}_k\tilde{r}_{k-1}^* e^{-j\pi/4}\right\}. \end{aligned} \quad (14)$$

C. M-ary DPSK, $M > 2$

The IFE now comprises two DIs

$$\{\mathrm{DI}[T, \pi/M], \mathrm{DI}[T, \pi/M - \pi/2]\}$$

with outputs

$$\begin{aligned} \tilde{q}_T'^{re}[k] &= \mathrm{Re}\left\{\tilde{r}_k\tilde{r}_{k-1}^* e^{j\pi/M}\right\} \\ \tilde{q}_T'^{im}[k] &= \mathrm{Im}\left\{\tilde{r}_k\tilde{r}_{k-1}^* e^{j\pi/M}\right\} = \mathrm{Re}\left\{\tilde{r}_k\tilde{r}_{k-1}^* e^{j(\pi/M-\pi/2)}\right\}. \end{aligned} \quad (15)$$

A slicer for M-ary DPSK was introduced in [6] based on multiple electrical rotations of the I&Q vector of the two components above, followed by multiple sign decisions.

III. Self-Coherent Detection Principle

The principle of operation, briefly introduced in [2] for DF-aided MS-BDPSK, is now reviewed and extended to M-ary DPSK. Synthetic LO generation is interpreted in terms of estimation theory as well as intuitively accounting for it in terms of a phase-noise reduction effect due to averaging independent noisy samples over multiple symbols. The relevant parameters are the phase constellation size M (in particular, $M = 2$ for DBPSK and $M = 4$ for DQPSK) and D, the multisymbol sliding *window size* in chips, with the kth rightmost chip representing the "signal" while the preceding $D-1$ chips, ranging from $k - D+1$ to $k-1$, are used to synthesize the improved *reference* (ref). As receiver complexity rises upon increasing these parameters, we typically consider $M = 2, 4, 8$,—i.e., DBPSK, DQPSK, and 8-PSK—over a window of $D = 3, 4, 5$ chips. Notice that $D = 2$ designates *conventional DPSK* to be henceforth referred to as *two-symbol DPSK* (2S-DPSK).

As discussed in [2] and [3], the noise variance of the DPSK phase difference decision statistic is the sum of PN variances of the two adjacent symbols—the information and reference have the same signal-to-noise ratio (SNR), degrading self-homodyne by about 3 dB relative to homodyne PSK (the gap is reduced to 2.4 dB at bit error rate (BER) of 10^{-3} due to the degrading effect of amplitude noise on PSK). In principle, if a precise estimate of the phase of the last symbol reference were available, the DPSK performance would coincide with that of coherent homodyne PSK since the variance of the PN difference would be cut in half, once one of the two terms in this difference is rendered perfect. By feeding back the previous, mostly correctly decoded, signals, a better phase reference is extracted and effectively used to reduce the PN of the previous (reference) symbol. In essence, the estimate of the phase reference symbol, generated out of previous observations and decision feedback, better approximates the perfect LO available in actual coherent detection. These intuitive statements may be rigorously formalized by applying estimation theory to derive an ML estimate $\hat{\tilde{A}}_{k-1}$ of the ideal noiseless reference $\tilde{A}_{k-1}$ as a function of the vector of past observations $[\tilde{r}_{k-D+1}, \ldots, \tilde{r}_{k-2}, \tilde{r}_{k-1}]$, assuming the linear channel model $\tilde{r}_k = \tilde{A}_k e^{j\theta} + \tilde{n}_k$. Using the recursive rotation relation (6) and the fact that the noise is additive white Gaussian, the ML estimate comes out as a linear combination of past observations, with coefficients given by the cumulative rotations

$$\begin{aligned}\hat{A}_{k-1} \equiv \tilde{R}_{k-1} &= \sum_{m=1}^{D-1} \hat{s}_{[k-m,k-1]} \tilde{r}_{k-m} \\ &= \tilde{r}_{k-1} + \hat{\tilde{s}}_{k-1}\tilde{r}_{k-2} + \hat{\tilde{s}}_{k-1}\hat{\tilde{s}}_{k-2}\tilde{r}_{k-3} \\ &\quad + \cdots + \hat{\tilde{s}}_{k-1}\hat{\tilde{s}}_{k-2}\ldots\hat{\tilde{s}}_{k-D+2}\tilde{r}_{k-D+1}. \end{aligned} \tag{16}$$

Actually this estimate should have been expressed in terms of the past transmitted rotation symbols $\{\tilde{s}_{k-m}\}_{m=1}^{D-1}$ (without hat) to which the RX does not have access; however, the RX resorts instead to the slicer estimates $\left\{\hat{\tilde{s}}_{k-m}\right\}_{m=1}^{D-1}$ representing the past decisions, which coincide with the transmitted rotation symbols $\hat{\tilde{s}}_{k-m} = \tilde{s}_{k-m}$ as long as the decisions are correct. The error propagation impact of incorrect decisions was shown both theoretically [2] and in simulations [2], [19] to be small.

The estimate $\tilde{R}_{k-1}$ may be viewed as an improved reference or a synthetic self-coherent LO, generated in terms of prior observations and prior decisions and fed back to generate the improved reference. The angle $\angle \tilde{R}_{k-1}$ provides a better phase reference than $\angle \tilde{r}_{k-1}$ (the noisy phase of the previous chip, used as self-homodyne reference in standard DPSK). For intuitive insight into the reference improvement, first specialize to 2S-DPSK ($D = 2$), in which case $\tilde{R}_{k-1} = \tilde{r}_{k-1}$, i.e., the estimate simply reduces to the last reference symbol.

Next consider $D = 3$, in which case $\tilde{R}_{k-1} = \tilde{r}_{k-1} + \hat{\tilde{s}}_{k-1}\tilde{r}_{k-2}$.

In the noiseless case, we set $\tilde{n}_k = 0$, i.e., $\tilde{r}_k = \tilde{A}_k = \langle \tilde{r}_k \rangle$, yielding for the noiseless estimate

$$\left\langle \tilde{R}_{k-1} \right\rangle = \tilde{A}_{k-1} + \hat{\tilde{s}}_{k-1}\tilde{A}_{k-2} = \tilde{A}_{k-1} + \tilde{A}_{k-1} = 2\tilde{A}_{k-1}. \tag{17}$$

The mean of the improved reference has doubled in length, i.e., quadrupled in power. Its noise component is $\tilde{n}_{k-1} + \hat{\tilde{s}}_{k-1}\tilde{n}_{k-2}$, with double the variance relative to $\tilde{r}_{k-1}$, resulting in doubled SNR. For general D, the noiseless or mean value of the estimate is

$$\begin{aligned}\left\langle \tilde{R}_{k-1} \right\rangle &= \sum_{m=1}^{D-1}\prod_{l=1}^{m-1} \tilde{s}_{k-m+l}\tilde{A}_{k-m} = \sum_{m=1}^{D-1} \hat{\tilde{s}}_{[k-m,k-1]} \langle \tilde{r}_{k-m} \rangle \\ &= \sum_{m=1}^{D-1} \hat{\tilde{s}}_{[k-m,k-1]}\tilde{A}_{k-m} = \sum_{m=1}^{D-1} \tilde{A}_{k-1} = (D-1)\tilde{A}_{k-1}. \end{aligned} \tag{18}$$

The $D - 1$ identical mean-value phasors add up coherently, i.e., the signal amplitude component of the reference is coherently reinforced to $D - 1$ times the noiseless phasor $\tilde{A}_{k-1}$ (the mean of the regular DPSK reference). In the noisy case, the received phasors $\tilde{r}_{k-D+1}, \tilde{r}_{k-D+2}, \ldots, \tilde{r}_{k-2}, \tilde{r}_{k-1}$ are all rotated in approximate alignment with $\tilde{r}_{k-1}$ (only perturbed by the PN); hence the signal amplitude is coherently reinforced to $\propto D-1$, whereas the noise contributions add up incoherently on a root mean square basis $\propto \sqrt{D-1}$, assuming uncorrelated successive phase-noise samples. The power SNR grows linearly in the number of chips $D-1$, which take part in forming the improved reference, with A_c the magnitude of the transmitted symbols:

$$\begin{aligned}\mathrm{SNR}\{\tilde{R}_{k-1}\} &= \frac{\left|\left\langle \tilde{R}_{k-1} \right\rangle\right|^2}{\mathrm{Var}\tilde{R}_{k-1}} = \frac{[A_c(D-1)]^2}{(D-1)2\sigma^2} \\ &= (D-1)\frac{A_c^2}{2\sigma^2} = (D-1)\mathrm{SNR}\{\tilde{r}_{k-1}\}. \end{aligned} \tag{19}$$

As the improved reference $\tilde{R}_{k-1}$ has the same mean angle as that of $\tilde{r}_{k-1}$, except that it is quieter, it is advantageous to replace $\tilde{r}_{k-1}$ by $\tilde{R}_{k-1}$ in the RX processing. The improved receiver structure is designed to extract out of the current and $D-1$ past received symbols an improved sufficient statistic $\tilde{r}_k\tilde{R}_{k-1}^*$ instead of $\tilde{r}_k\tilde{r}_{k-1}^*$. This amounts to mixing the current observation $\tilde{r}_k$ with the synthetic LO $\tilde{R}_{k-1}$, synthesized out of the

$D-1$ past observations, generating the phase difference estimates $\angle\tilde{r}_k - \angle\tilde{R}_{k-1}$. The ML receiver (1) over the extended multisymbol window uses a modified decision variable $w_k^{(\alpha)}$

$$\begin{aligned} w_k^{(\alpha)} &\equiv \mathrm{Re}\left\{\tilde{r}_k \tilde{R}_{k-1}^* e^{-j\Delta\mu_k^{(\alpha)}}\right\} = \mathrm{Re}\left\{\tilde{q}_k \tilde{s}_k^{(\alpha)*}\right\} \\ &= |\tilde{r}_k| \left|\tilde{R}_{k-1}\right| \cos\left(\angle\tilde{r}_k - \angle\tilde{R}_{k-1} - \Delta\mu_k^{(\alpha)}\right) \end{aligned} \quad (20)$$

where $\tilde{q}_k$ is now redefined as the mixing product of the observation $\tilde{r}_k$ with the improved reference $\tilde{R}_{k-1}$ rather than $\tilde{r}_{k-1}$

$$\tilde{q}_k \equiv \tilde{r}_k \tilde{R}_{k-1}^*. \quad (21)$$

These abstract formulas are embodied in the DF MC-DPSK optimal receiver block diagram realizations treated in this paper. For high SNR, the noisy phase of the ref is given by the quadrature noise over the length of the phasor (with the second formula for 2S-DPSK)

$$\angle\tilde{R}_{k-1} \approx \mu_{k-1} + \frac{\sum_{m=1}^{D-1} \tilde{n}_{k-m}^{im}}{A_c(D-1)}, \quad \angle\tilde{r}_{k-1} \approx \frac{n_{k-1}^{im}}{A_c}. \quad (22)$$

The PN variance equals the inverse of the SNR

$$\begin{aligned} \mathrm{Var}\{\angle\tilde{R}_{k-1}\} &\approx \frac{\sigma^2/A_c^2}{D-1} = \mathrm{SNR}^{-1}\left\{\tilde{R}_{k-1}\right\} \\ &= \frac{\mathrm{SNR}^{-1}\left\{\tilde{r}_{k-1}\right\}}{D-1}. \end{aligned} \quad (23)$$

The reduction in phase-noise variance relative to 2S-DPSK, called *self-coherent gain,* is seen to be equal to the number of chips $D-1$ in the reference window (for 2S-DPSK $\mathrm{G_{sc}} = 1$)

$$G_{\mathrm{SC}} \equiv \frac{\mathrm{Var}\{\angle\tilde{r}_{k-1}\}}{\mathrm{Var}\{\angle\tilde{R}_{k-1}\}} = D-1. \quad (24)$$

This indicates that in the asymptotic limit $D \to \infty$ of a sufficiently large multisymbol window size, the DPSK phase reference tends to a perfectly clean effective optical LO, equivalent to an LO in coherent PSK homodyne, i.e. DF MC-DPSK performance tends to coherent homodyne.

In summary, the DF MC-DPSK technique emulates coherent detection, attaining effective coherent homodyne behavior while avoiding the complexity of an actual LO laser and associated optical phase-locked loop. Such an SC phase detection scheme with improved reference (synthetic LO) (16) is in principle more immune against any PN source, be it the PN induced by the additive optical amplifier ASE, the nonlinear PN induced in the fiber link by the Gordon–Mollenauer effect, or uncorrelated components in XPM-induced PN.

The optoelectronic realizations treated next may always be interpreted as synthesizing a coherent LO out of the received signal, then mixing the received signal with the synthetic LO, though in certain cases the interpretation is implicit in equivalent mathematical transformations.

IV. SC DPSK Receivers Overview

We now introduce integrated-optoelectronic realizations of the self-coherent detection concept, based on direct detection with multiple MZ DIs or more complex multiarm DIs, realizing multiple delays spanning a longer observation window, and subsequent analog soft-processing of these outputs aided by decision feedback.

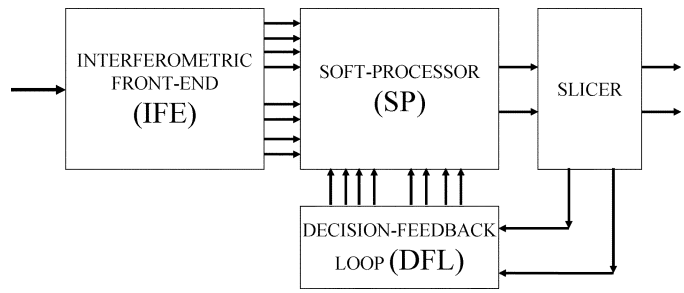

Fig. 2. Top-level block diagram of self-coherent DF-aided MS-DPSK receiver.

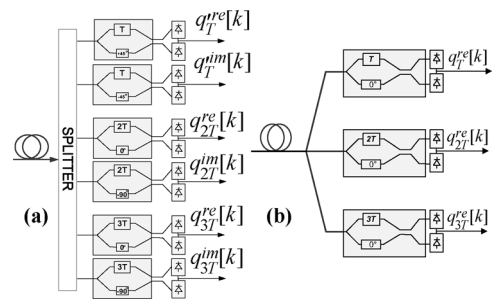

Fig. 3. The IFE for the first class of self-coherent receiver architectures. (a) DQPSK ($M = 4, D = 4$). (b) DBPSK ($M = 2, D = 4$).

At the top level of description, all SC-DPSK receivers comprise the following modules with appropriate interconnections: an *interferometric front-end* (IFE), a *soft processor* (SP), a *slicer*, and a *decision feedback loop* (DFL) (Fig. 2). In the preprocessing architectures, the IFE features more complex interferometric structures than in 2S-DPSK, and the IFE-SP cascade manipulates the received optical signal under the control of the decision feedback relayed from the slicer output via the DFL. The SP generates improved soft-decision sufficient statistics to be quantized by the slicer in order to generate the bit decisions. An advantage of all DF-aided DPSK systems is that the slicer is in fact identical to that of a 2S-DPSK system, comprising just one (two) data flip-flop (DFF) sign-decision device(s) for DBPSK (DQPSK). This is in contrast with MS-DPSK systems without DF [16]–[18], which require considerably more complex slicers. The decision bit(s) provide the information output(s), namely, the estimates $\hat{b}_{k-1}^{re}$ (and for DQPSK also $\hat{b}_{k-1}^{im}$) of the transmitted bit(s), representing the estimates of the transmitted rotation symbols $\hat{\tilde{s}}_{k-1}$. The output bits are tapped to provide the auxiliary output(s) feeding the DFL. Notice the delay of the slicer decisions by one discrete-time unit due to the inherent one-clock settling period of the DFFs.

For postprocessing SC-DPSK systems, the IFE coincides with that of 2S-DPSK. In preprocessing schemes, the IFE (Fig. 3) is more complex (but the electronics is simpler), comprising multiple relative delays $T, 2T, .3T, \ldots, (D-1)T$, either realized as discrete MZ DI devices each implementing a delay value (Sections V–VI) or alternatively realized as integrated multiarm DI devices (Section VII). For systems with

$M > 2$, the DI devices in the IFE come in pairs providing "in-phase" and quadrature optical preprocessing. In the systems of Section IV, the DF is applied to the SP in analog form, whereas in Section V it is directly applied to the IFE, such that the SC degenerates to a simpler form.

The improved SC DF-aided MS-DPSK receivers are compatible with conventional 2S-DPSK transmitters. The only modification possibly required at the TX is the provision of polyphase operation, wielding a beneficial effect on easing the DF delay requirements. As the decisions are generated at the baud rate, they become available one clock cycle later, i.e., T_s seconds after the "current time" when the noisy decision statistics enter the DFFs in the slicer. Hence, when $d = 1$, i.e., without interleaving, the previous estimate of rotation symbol $\hat{\tilde{s}}_{k-1}$ requisite for the generation of the additive term $\hat{\tilde{s}}_{k-1}\tilde{r}_{k-2}$ in $\tilde{R}_{k-1}$ (16) must be hauled in zero time from the output of the slicer to the point where the summation yielding $\tilde{R}_{k-1}$ is generated and $\tilde{R}_{k-1}$ beats with $\tilde{r}_k$ at the current time k to yield the decision statistic entering the slicer. Fortunately, under polyphase operation, the decisions are still generated at the baud rate, yet the reference synthesis occurs at d times slower polyphase rate. The additive contribution $\hat{\tilde{s}}_{k-1}\tilde{r}_{k-2}$ is only required after a delay $T_s d$ relative to the current time, whereas the decision $\hat{\tilde{s}}_{k-1}$ has already become available T_s seconds after the current time, providing a margin of $(d-1)T_s$ seconds for the loop delay and the forward propagation to the DI output, enabling the transfer of $\hat{\tilde{s}}_{k-1}$ from the slicer output to the point where $\tilde{r}_k\tilde{R}^*_{k-1}$ enters the slicer input.

V. A First Class of Realizations

In this section, we detail the structure of the first realization class of SC preprocessing receivers. In this RX architecture, the IFE comprises $2(D-1)$ DIs for $M > 2$ and $D-1$ DIs for $M = 2$.

A. M-ary DPSK

The IFE now contains the following DI devices:

$$\{\mathrm{DI}\,[T, \pi/M]\,, \mathrm{DI}\,[T, \pi/M - \pi/2]\} \cup \left\{\mathrm{DI}[mT, 0], \mathrm{DI}\left[mT, \frac{\pi}{2}\right]\right\}_{m=2}^{D-1} \quad (25)$$

e.g., for an 8-DPSK system, the "main" DIs (those at delay T, present in a 2S-DPSK system as well) are biased in quadrature at $\pi/8$ and $-3\pi/8$, with the remaining "auxiliary" DIs having delays $= 2T, 3T, \ldots, (D-1)T$ also coming in quadrature pairs, but with "straight" 0°, 90° phases. The two main devices, phase-tilted relative to the 0°, 90° phases, output the decision statistics $\tilde{q}^{re}_T[k], \tilde{q}^{im}_T[k]$, the same as in (14) for 2S-DQPSK. The auxiliary ($m = 2, 3, \ldots, D-1$) device pairs generate

$$\tilde{q}^{re}_{mT}[k] = \mathrm{Re}\left\{\tilde{r}_k\tilde{r}^*_{k-m}\right\}, \quad \tilde{q}^{im}_{mT}[k] = \mathrm{Im}\left\{\tilde{r}_k\tilde{r}^*_{k-m}\right\}. \quad (26)$$

In particular, for DQPSK ($M = 4$), the IFE comprises

$$\{\mathrm{DI}\,[T, \pm\pi/4]\} \cup \{\mathrm{DI}[mT, 0], \mathrm{DI}\,[mT, \pi/2]\}_{m=2}^{D-1} \quad (27)$$

i.e., the phase biases of the main DIs are now ±45°.

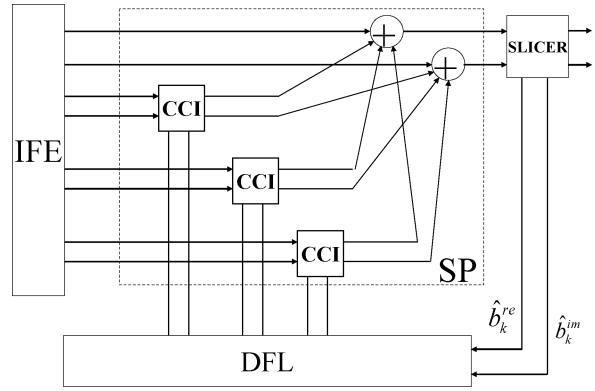

Fig. 4. SP for DQPSK receiver using the first class of architectures (exemplified for $D = 4$). The IFE outputs are given by (29) (see Fig. 3). The DFL outputs are given by (36) (see Fig. 6).

For DBPSK ($M = 2$), the quadrature devices are eliminated, i.e., there are half as many, $D-1$, devices all biased at 0°

$$\{\mathrm{DI}[T, 0]\} \cup \{\mathrm{DI}[mT, 0]\}_{m=2}^{D-1}. \quad (28)$$

The multiple DIs in the IFE are all fed from the input fiber (typically the output of an optical preamplifier) by means of a splitter (Fig. 3). The DIs or subsets thereof may be possibly integrated onto a single substrate, including the input splitter.

The DI balanced electrical outputs form the IFE outputs

$$\{q'^{re}_T[k], q'^{im}_T[k]\} \cup \{q^{re}_{mT}[k], q^{im}_{mT}[k]\}_{m=2}^{D-1} \quad (29)$$

which are fed into the SP module along with digital control signals generated by the DFL. The SP provides electronic-post detection soft processing of the balanced DI outputs prior to the decision, generating a pair of quadrature electrical outputs to be sign-quantized in the slicer.

B. DQPSK

We next specialize to the DQPSK format ($M = 4$), subsequently returning to DBPSK and to general M-ary DPSK.

The SP (Fig. 4) now comprises a pair of analog adders fed by the two "main" DIs as well as by the outputs of mixed-signal circuits called *complex-controlled inverters* (CCIs). The CCI devices are each fed by auxiliary DI outputs and DF processed by the DFL. The array of CCI modules in the SP is intended to apply additive corrections to the two main DI outputs, which directly feed the two adders. The outputs of the two adders provide the SP outputs, fed into the two sign-decision (DFF) devices of the slicer.

C. CIs and CCIs

A CI is a mixed-signal device essentially effecting multiplication by $+/-1$ of its real-valued analog input, as actuated by a control bit input (Fig. 5) switching (maintaining) the polarity of its analog input when the control bit is 1 (0). A CCI is a mixed-signal module comprising four CIs interconnected as in Fig. 5, implementing a complex multiplication of the pair of inputs $\tilde{x}(t) = x^{re}(t) + jx^{im}(t)$ with

$$\sqrt{2}\tilde{s}' = \pm 1 \pm j \in e^{j\pi/4}\{1, j, -1, -j\}\sqrt{2} \leftrightarrow \{00, 10, 11, 01\} \quad (30)$$

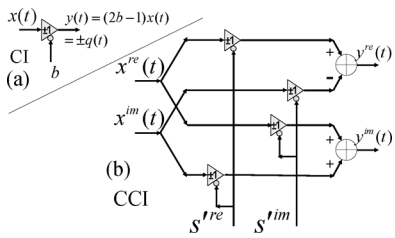

Fig. 5. Mixed signal components of the SP. (a) Controlled inverter and (b) complex controlled inverter.

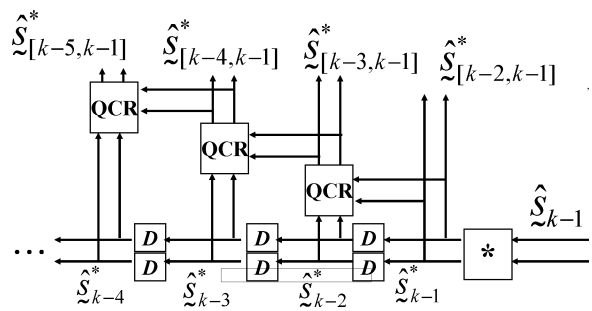

Fig. 6. DFL for DQPSK using the first class of self-coherent receiver architectures. The inputs and outputs are bit pairs, not directly labeled; rather the corresponding complex rotations are indicated.

representing a 45°-tilted QPSK complex constellation symbol, mapped by the Gray-encoded control bit pair $\{b^{re}, b^{im}\}$

$$\begin{aligned}\tilde{y}(t) &= y^{re}(t) + jy^{im}(t)\\ &= \sqrt{2}\tilde{s}'\tilde{x}(t) = (\pm 1 \pm j)(x^{re}(t) + jx^{im}(t)).\end{aligned} \quad (31)$$

As the CCI is a specialized complex multiplier with multiplicand $\pm 1 \pm j$, its analog implementation is considerably simpler than that of a general four-quadrant complex multiplier.

To see how the SP and DFL operate, we specialize the results of Section III to the DQPSK case at hand. The ML decoding decision statistic (20) may be equivalently expressed as

$$w_k^{(\alpha)} \equiv \mathrm{Re}\left\{\tilde{q}_k \tilde{s}_k^{(\alpha)*}\right\} = \mathrm{Re}\left\{\tilde{q}'_k \tilde{s}'^*_k\right\} \quad (32)$$

where we introduced a tilted version of (21)

$$\begin{aligned}\tilde{q}'_k &= e^{j\pi/4}\tilde{q}_k = e^{j\pi/4}\tilde{r}_k \tilde{R}^*_{k-1} = q'^{re}_k + jq'^{im}_k\\ \text{and } \tilde{s}'_k &\equiv \tilde{s}_k^{(\alpha)} e^{j\pi/4} \in \frac{(\pm 1 \pm j)}{\sqrt{2}}\end{aligned} \quad (33)$$

with the transmission index α discarded off $\tilde{s}'_k$.

The decoding is still formulated as in 2S-DPSK as maximization over the 45°-tilted symbol $\tilde{s}'_k$ equivalent to making decisions on the signs of the variables, which are now the real and imaginary parts q'^{re}_k, q'^{im}_k of the tilted complex decision statistic (33).

To see how the decision variables q'^{re}_k, q'^{im}_k are extracted by the SP, substitute the ref $\tilde{R}_{k-1}$ (16) into (33)

$$\begin{aligned}\tilde{q}'_k &= \tilde{r}_k \Big[\tilde{r}_{k-1} + \hat{\tilde{s}}_{k-1}\tilde{r}_{k-2}\\ &\quad + \hat{\tilde{s}}_{k-2}\hat{\tilde{s}}_{k-1}\tilde{r}_{k-3} + \cdots\Big]^* e^{j\pi/4} =\\ &= e^{j\pi/4}\tilde{r}_k\tilde{r}^*_{k-1} + e^{j\pi/4}\hat{\tilde{s}}^*_{k-1}\tilde{r}_k\tilde{r}^*_{k-2}\\ &\quad + e^{j\pi/4}\hat{\tilde{s}}^*_{k-2}\hat{\tilde{s}}^*_{k-1}\tilde{r}_k\tilde{r}^*_{k-3} + \cdots\\ &= \tilde{q}'_T[k] + e^{j\pi/4}\hat{\tilde{s}}^*_{k-1}\tilde{q}_{2T}[k]\\ &\quad + e^{j\pi/4}\hat{\tilde{s}}^*_{k-2}\hat{\tilde{s}}^*_{k-1}\tilde{q}_{3T}[k] + \cdots.\end{aligned} \quad (34)$$

The first term $\tilde{q}_T[k] = \tilde{q}'^{re}_T[k] + j\tilde{q}'^{im}_T[k]$ in the last line comprises the pair of outputs of the two main DIs, whereas the generic term in this summation (scaled by $\sqrt{2}$ for convenience, without affecting the sign decisions) is amenable to generation by a CCI. Using (5), we have

$$\begin{aligned}&\sqrt{2}e^{j\pi/4}\hat{\tilde{s}}^*_{k-m+1}\cdots\hat{\tilde{s}}_{k-2}\hat{\tilde{s}}^*_{k-1}\tilde{q}_{mT}[k]\\ &\quad = \left\{e^{j\pi/4}\hat{\tilde{s}}^*_{[k-m,k-1]}\sqrt{2}\right\}\left(\tilde{q}^{re}_{mT}[k] + j\tilde{q}^{im}_{mT}[k]\right).\end{aligned} \quad (35)$$

Indeed, the last expression is the product of two bracketed terms, with the right one comprising the outputs of a pair of DIs of delay mT and bias phases 0°, 90° while the left one equals $\pm 1 \pm j$. This leads to the structure of Fig. 4, with the SP containing $D-1$ CCIs, each fed by an auxiliary DI quadrature pair, with the mth CCI controlled by the term (5), in turn generated by the DFL by digitally processing the DF bitstreams $\{\hat{b}^{re}_k, \hat{b}^{im}_k\}$ (or equivalently the rotation symbols $\hat{\tilde{s}}_{k-1}$), as shown in Fig. 6. The elementary combinational logic devices required for the generation of the rotation increments in the DFL are called *QPSK constellation rotators* (QCRs). The QCR building blocks realize complex multiplications of the form $\tilde{s}_{\mathrm{in}}\tilde{m} = \tilde{s}_{\mathrm{out}}$, where $\tilde{s}_{\mathrm{in}}, \tilde{s}_{\mathrm{out}}, \tilde{m} \in \{1, j, -1, -j\}$ all belong to an unrotated QPSK constellation, essentially the four-element rotation group, with its symbols uniquely represented by the Gray codewords {00,01,11,10}. The QCR truth table is readily obtained and hence it is not reproduced here. A conjugator Boolean function $\tilde{s}_{\mathrm{out}} = \tilde{s}^*_{\mathrm{in}}$ (which may be absorbed in the QCR multiplier truth table in actual realizations) and a pair of discrete-time delay lines also feature in the DFL.

Lastly, we remark that the complex control inputs to the CCIs in the SP consist of 45°-tilted rotation symbols $e^{j\pi/4}\hat{\tilde{s}}^*_{[k-m,k-1]}\sqrt{2}$ as in (35), in contrast with the "straight" cumulative rotation symbols generated by the DFL (5). However no additional transformation is further necessary to map between the two types of symbols, since corresponding symbols (differing by 45°) in the two types of constellations are conveniently Gray-encoded by the same bit-pair.

D. DBPSK

Briefly considering the $M = 2$ DBPSK format, partially treated in [2]–[4] for special cases of D, the main simplification relative to DQPSK is that all in-quadrature devices, and associated signals labeled "im," may all be discarded, as they provide irrelevant statistics. Hence, the treatment essentially becomes real-valued. The rotation symbols are now $s_k = \pm 1$, a phase tilt is unnecessary, and the CCIs in the SP reduce to the simpler CIs, (Fig. 7) while the QCRs reduce to XOR gates (Fig. 8). A single slicer is then required for a sign decision $\hat{s} = \mathrm{sgn}\tilde{q}^{re}_k = \pm 1$ fed by the real-valued statistic

$$\begin{aligned}q^{re}_k &= \mathrm{Re}\left\{\tilde{r}_k \tilde{R}^*_{k-1}\right\}\\ &= q^{re}_T[k] + \hat{s}_{k-1}q^{re}_{2T}[k] + \hat{s}_{k-2}\hat{s}_{k-1}q^{re}_{3T}[k] + \cdots.\end{aligned} \quad (36)$$

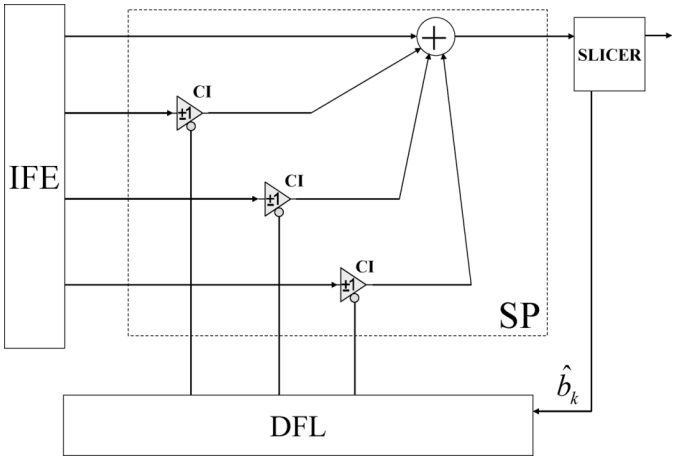

Fig. 7. SP for DBPSK receiver using the first class of architectures (exemplified for $D = 4$).

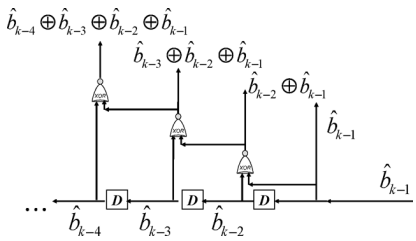

Fig. 8. DFL for DBPSK using the first class of self-coherent receiver architectures.

Comparing the last equation with (34), it is apparent that the conjugations are discarded here as the rotation symbols are now real. The generic term $\hat{s}_{k-m}, \ldots, \hat{s}_{k-2}\hat{s}_{k-1}q^{re}_{mT}[k]$ in this summation is obtained by multiplying the analog output $q^{re}_{mT}[k] \equiv \mathrm{Re}\left\{\tilde{r}_k \tilde{R}_{k-m}\right\}$ of DI$[mT, 0]$ by the ± 1 valued cumulative rotation $\hat{s}_{[k-m,k-1]} = s_{k-m+1}s_{k-m+2}, \ldots, s_{k-1}$.The mixed-signal multiplication is realized by $D-1$ CI devices, as shown in Fig. 7. As the multiplicative group $\{-1,1\}$ and the mod-2 addition group $\{0,1\}$ are isomorphic

$$\hat{s}_{[k-m,k-1]} \leftrightarrow b_{k-m+1} \oplus b_{k-m+2} \oplus \cdots \oplus b_{k-1}$$

the DFL simply generates the rotation increments by mod-2 additions implemented by XOR gates (Fig. 8).

E. M-ary DPSK

We consider systems with $M > 2$ for arbitrary M. The IFE structure was already described in (25). The difference relative to DQPSK is that the main DIs are biased at π/M and $\pi/M - \pi/2$ rather than $\pm\pi/4$. For conventional ($D = 2$) M-ary DPSK, such phase biases enable detecting M-ary DPSK with just the two quadrature DIs directly feeding a more complex slicer performing $M/4-1$ rotations of the I&Q plane in the electrical domain followed by $M/2$ sign comparisons [6]. This principle does not change as a result of using the SC detection; however, in this case the slicer just described operates on the additively corrected outputs $\tilde{q}'^{\,re}, \tilde{q}'^{\,im}_k$ of the two main DIs, with the corrections generated in the SP as before, by means of complex rotations of the auxiliary DI outputs according to the cumulative rotation symbols. Generalizing (34) to arbitrary M, the angle $\pi/4$ in that equation is replaced by π/M, yielding at the SP output the re-im parts of

$$\begin{aligned}\tilde{q}_k{}' &= \tilde{q}'^{\,re} + j\tilde{q}'^{\,im} = e^{j\pi/M}\tilde{q}_k = e^{j\pi/M}\tilde{r}_k\tilde{R}^*_{k-1} \\ &= \tilde{q}'_T[k] + e^{j\pi/M}\hat{\tilde{s}}^*_{k-1}\tilde{q}_{2T}[k] \\ &\quad + e^{j\pi/M}\hat{\tilde{s}}^*_{k-2}\hat{\tilde{s}}^*_{k-1}\tilde{q}_{3T}[k] + \cdots. \end{aligned} \tag{37}$$

Unfortunately, as the rotation angle in each term is no longer $\pi/4$, the real and imaginary parts are no longer bipolar; hence complex rotations cannot be simply performed by CCI devices. Rather, full-fledged four-quadrant complex multipliers (CMs) are required to perform multiplications of the form

$$\tilde{y}(t) = y^{re}(t) + jy^{im}(t) = e^{j2\pi r/M}(x^{re}(t) + jx^{im}(t)) \tag{38}$$

for integer r. Moreover, the QCRs in the DFL are to be replaced by more general M-ary *constellation rotators* (MCRs), representing multiplications within the group $\{e^{j2\pi r/M}\}_{r=0}^{M-1}$, realizable as combinational circuits with larger truth tables. Upon relabeling CCI→CM and QCR→MCR, the block diagrams, applicable to DQPSK, for the SP and the DFL (Figs. 4 and 6) carry over "as is" to the M-ary DPSK case. Unfortunately, the realization of CMs in the analog domain would be prohibitive. An alternative would be using high-speed analog-to-digital (A/D) conversion, performing the complex multiplications in the digital domain. However, assuming access to digital postprocessing, the postprocessing scheme of [7]–[11], based on an IFE comprising just a pair of DIs, can achieve roughly the same performance. Alternative approaches to self-coherent detection of M-ary DPSK, not requiring A/D conversion, are introduced in the next two sections.

VI. A Second Class of Realizations

In the next two architectures, the same principle of operation is at work: past reference chips are aligned by the feedback circuitry to add up collinearly, yielding a "cleaner" (higher SNR, lower PN) reference, prior to beating it with the current information chip. In the architecture of this section, the analog soft-detection circuitry is simplified by eliminating the controlled inverters (CIs/CCIs), resulting in a less complex SP at the expense of more complex optical DI devices. All that is left in the SP module is a pair of analog adders (just one adder for DBPSK) used to apply the auxiliary DI outputs as additive corrections to the main DI outputs (e.g., Figs. 9–11). This is achieved at the expense of resorting to more complex MZ DI devices, incorporating active electrodes. The DFL is now analog rather than digital, consisting of a driver applying baud-rate electrical control signal to the active electrodes of the modified DIs. As the CI/CCI implementation may be increasingly difficult at higher and higher speeds (40/160 Gbps) while the electrooptic processing is known to be faster, the suggested tradeoff, eliminating the CIs/CCIs, may turn out to be a worthwhile one.

The SP complexity reduction is enabled by the insight that the phase rotations requisite for DF may be generated electrooptically rather than electronically by means of *interferometric decision feedback* (IDF) feeding the past decisions directly into the DIs in the optical domain rather than into CCIs.

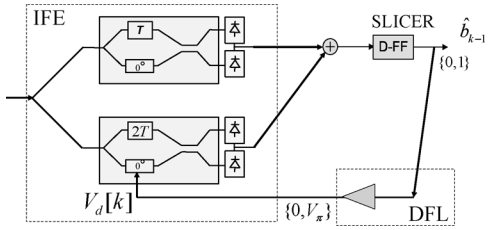

Fig. 9. Three-symbol DBPSK ($D = 3$, $M = 2$) receiver using the second class of architectures. The DFL now consists of a driver generating the $V_d[k] \in \{0, V_\pi\}$ drive voltage in response to the bit values 0,1 for the $\hat{b}_{k-1}$ decision bits at the slicer output. The voltage $V_d[k]$ is applied to the electrode of the auxiliary DI with $2T$ delay, the electrical balanced output of which is summed up and added to the T-delayed output of the main DI.

Inspecting the balanced output of a DI$[mT, \gamma]$ device (9), and observing that the rotation increments are just phase factors, the idea is to put the phase-shift complex factor $e^{j\gamma}$ to work in order to realize the mathematical operations of multiplication by complex-rotation increments, occurring in the synthesis of the improved decision statistics (37) for M-ary DPSK with re-im parts expressible as

$$\begin{aligned}\tilde{q}_k^{re} &= \sum_{m=1}^{D-1} \mathrm{Re}\left\{\hat{\tilde{s}}^*_{[k-m,k-1]} e^{j\pi/M} \tilde{r}_k \tilde{r}^*_{k-m}\right\} \\ &= \sum_{m=1}^{D-1} \mathrm{Re}\left\{e^{j\gamma_k^{(m)}} \tilde{r}_k \tilde{r}^*_{k-m}\right\} = \sum_{m=1}^{D-1} q_{mT}^{(\gamma_k^{(m)})re}[k] \quad (39)\end{aligned}$$

with $\gamma_k^{(m)} \equiv \pi/M - \angle \hat{\tilde{s}}_{[k-m,k-1]}$, $m = 2, 3, \ldots, D-1$, and similarly for $\tilde{q}_k^{im}$

$$\tilde{q}_k^{im} = \sum_{m=1}^{D-1} \mathrm{Im}\left\{e^{j\gamma_k^{(m)}} \tilde{r}_k \tilde{r}^*_{k-m}\right\} = \sum_{m=1}^{D-1} q_{mT}^{(\gamma_k^{(m)})im}[k]. \quad (40)$$

The last form of each variable in (39) and (40) features a summation of outputs of DIs with time-varying bias phases. This suggests an IFE structure containing auxiliary DIs with multiple delays $= T, 2T, \ldots, (D-1)T$, wherein the phase biases are no longer constant (as in MZ DIs used in conventional DPSK). In the new structure, time-varying phase modulations

$$\gamma_k^{(m)}, \gamma_k^{(m)} - \pi/2 \in \{\pi + 2\pi\beta\}_{\beta=0}^{M-1}/M \quad (41)$$

are applied to high-speed electrodes incorporated in each of the auxiliary DIs. Assume a fixed phase bias component π/M is built into the DIs (an alternative would be to generate a DC component of the drive voltage to the modulating electrodes, onto which the time-varying modulating component is superposed). The time-varying modulating drive voltage is then expressed in terms of the switching voltage V_π as

$$V_d[k] \in \left\{\frac{2V_\pi \beta}{M}\right\}_{\beta=0}^{M-1}. \quad (42)$$

A. BDSPK

In this case, the quadrature devices are eliminated, the built-in bias is zero, and the time-varying phases and modulating drive voltages applied to each auxiliary DI are

$$\gamma_k^{(m)} \in \{0, \pi\} \quad \text{and} \quad V_d[k] \in \{0, V_\pi\}. \quad (43)$$

Notice that switching the drive voltage of a DI from zero to V_π causes a polarity reversal of the balanced photocurrent. The improved decision variable generated by summing up all the balanced photocurrents of all the DIs is expressible as

$$\tilde{q}_k^{re} = q_T[k] \pm q_{2T}[k] \pm q_{3T}[k] + \cdots \quad (44)$$

with the signs set by the DFL such that all the auxiliary real-valued interferometer outputs $\pm q_{mT}[k]$ get aligned in phase, acquiring the same sign as the output $q_T[k]$ of the main DI, resulting in improved detection SNR.

Such IDF-aided architecture applies to any M, D parameter values. The resulting systems are exemplified in Figs. 9–11 for several representative formats.

VII. A Third Class of Realizations

In this section, we introduce a second IDF-driven variant wherein the synthetic LO is directly electrooptically synthesized using more complex *integrated photonic circuits* (IPCs) (e.g., Fig. 12), such that the LO is identifiable as an optical signal at a particular point in the IPC (as opposed to previous schemes in which the LO could not be physically pinpointed but appeared mathematically in the decision statistics at the SP output).

From a hardware complexity point of view, in this architecture the collection of multiple DIs is replaced by a smaller number of novel IPCs, which are somewhat more complex. Such level of optical integration is beyond the simple measure of juxtaposing the multiple DIs onto a single optical substrate, bearing the potential to further reduce the IPC count and the complexity of devices integrated on each IPC.

It was seen that self-coherent detection requires the synthesis of a self-coherent LO $\tilde{R}_{k-1}$ (16) as well as the mixing between the signal $\tilde{r}_{k-1}$ and the synthetic LO, as described in the generation of the decision variables (37) for M-ary SC DPSK

$$\tilde{q}_k^{re} = \mathrm{Re}\left\{e^{j\pi/M} \tilde{r}_k \tilde{R}^*_{k-1}\right\}, \quad \tilde{q}_k^{im} = \mathrm{Im}\left\{e^{j\pi/M} \tilde{r}_k \tilde{R}^*_{k-1}\right\}. \quad (45)$$

In the architecture treated in this section, these equations are directly implemented by a novel multiarm DI structure [4], consisting of a splitter, two paths, and a directional coupler with balanced photodetection, as exemplified in Fig. 12 for $D = 5$ and $M = 4$. Let $\tilde{u}_k$, $\tilde{v}_k$ denote the input field samples into the coupler; then the balanced photocurrent output is

$$|\tilde{u}_k + \tilde{v}_k|^2 - |\tilde{u}_k - \tilde{v}_k|^2$$

yielding the cross-term

$$i_k = \mathrm{Re}\tilde{u}_k \tilde{v}_k^*. \quad (46)$$

The upper path passes the signal $\tilde{r}_k$ through, with zero effective delay and phase-shift π/M, i.e., $\tilde{\mu}_k = e^{j\pi/M}\tilde{r}_k$. The lower path comprises $D-1$ arms with successive delays $= T, 2T, \ldots, (D-1)T$. All these arms except the first one

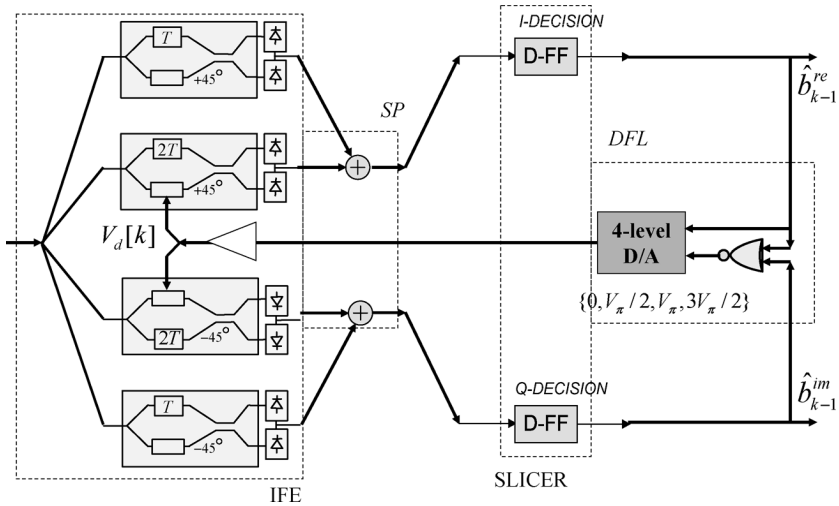

Fig. 10. Three-symbol DQPSK ($D = 3$, $M = 4$) receiver using the second class of architectures. The DFL now consists of a driver generating the drive voltage $V_d[k] \in \{0, V_{\pi/2}, V_\pi, 3V_{\pi/2}\}$ in response to the pair of bit decisions $\hat{b}^{re}_{k-1}, \hat{b}^{im}_{k-1}$ according to a Gray-code mapping $00 \to 0$, $10 \to V_\pi/2$, $11 \to V_\pi$, $01 \to 3V_\pi/2$. The drive voltage $V_d[k]$ is simultaneously applied to both the in-phase and quadrature auxiliary DIs of delays $2T$. The electrical balanced outputs of the two in-phase (quadrature) DIs with delays T and $2T$ are summed up and applied to the in-phase (quadrature) DFF decision device.

are equipped with phase-modulating electrodes. The mth arm has relative delay mT and is modulated by a time-varying phase-shift $\gamma_k^{(m)}$ (relative to the upper path). The multiple arms in the lower path are combined with equal gains. Then, feeding the lower arm of the directional coupler with the optical signal

$$\tilde{v}_k = \tilde{r}_{k-1} + e^{j\gamma_k^{(2)}}\tilde{r}_{k-2} + e^{j\gamma_k^{(3)}}\tilde{r}_{k-3} + \cdots + e^{j\gamma_k^{(D-1)}}\tilde{r}_{k-D+1}. \quad (47)$$

This equation is reminiscent of the summation of prior symbol contributions in the generation of the improved (16). In fact, (16) may be directly synthesized by setting the phase biases to equal the cumulative rotation increment angles $\gamma_k^{(m)} \equiv \angle \hat{s}_{[k-m,k-1]}$ by applying appropriate drive voltages, belonging to the set $\{2V_\pi r/M\}_{r=0}^{M-1}$ (assuming a fixed phase bias π/M built into the DIs). The lower path is then seen to directly synthesize the synthetic LO $\tilde{v}_k = \tilde{R}_{k-1}$. The cross-term (46) in the balanced output of the novel multiarm DI then coincides with the decision statistic $\tilde{q}_k'^{re}$ of (45):

$$i_k = \mathrm{Re}\left\{e^{j\pi/M}\tilde{r}_k\tilde{R}^*_{k-1}\right\} = \tilde{q}_k'^{re}. \quad (48)$$

A second similar device, biased in quadrature relative to the first device, is used to synthesize $\tilde{q}_k'^{im}$ (see Fig. 12 for DQPSK with $D = 5$ and see [4, Fig. 4] for $D = 3$).

An interesting property is that the overall loss of the lower (LO) path does not affect system operation (within reasonable limits), e.g., an overall attenuation factor κ in the lower path, amounting to the substitution $\tilde{R}_{k-1} \to \kappa\tilde{R}_{k-1}$, does not impact the error rate as it bears no impact on the sign determination

$$\mathrm{sgn}\,\mathrm{Re}\left\{\tilde{r}_k\tilde{R}^*_{k-1}e^{j\pi/4}\right\} = \mathrm{sgn}\,\mathrm{Re}\left\{\tilde{r}_k\left(\kappa\tilde{R}_{k-1}\right)^* e^{j\pi/4}\right\}. \quad (49)$$

Hence, the loss incurred in combining the multiple arms is inconsequential.

A disadvantage of this architecture is that it requires more complex integrated electrooptic structure with multiple waveguide splitters and combiners, but on the other hand, the highly integrated device saves multiple MZ DIs (of nonstandard delays). The main deficiency of this class of systems is the complexity of the multiple transmission-line electrical modulating structures, which may be prohibitive for large D. This shortcoming was remedied in a novel integrated-optical structure [6], wherein the $D-1$ delays are retained but just a pair of modulating electrodes is required to achieve the self-coherent operation for any D.

VIII. The Electronic Postprocessing Approach

Heretofore, we have thoroughly investigated optical preprocessing architectures. Alternative electronic postprocessing SC schemes were introduced in [11]. A simple yet universal digital implementation of the DF SC MS-DPSK receiver architecture was recently proposed for any multilevel DPSK format [27]. The optical front-end of the digital self-coherent receiver requires just one pair of unmodulated orthogonal DIs, the same as that required for conventional DQPSK demodulation. Derivations of the data-aided multisymbol phase estimation algorithms for multilevel DPSK and DPSK/amplitude shift keying were also provided for the digital implementation. When additionally including an intensity detection branch, this digital self-coherent receiver is also compatible with the recently introduced techniques reconstructing signal optical field [11], [27], [28], thereby allowing the detection of any multilevel phase and amplitude modulated signal [29] and digital compensation of transmission impairments such as chromatic dispersion [27], [28], nonlinear phase noise [30], and polarization-mode dispersion [30] in a similar way as practiced in the recently introduced digital coherent receivers [31]–[38].

A comparison between the optical preprocessing and electronic postprocessing approaches is carried out in this section, with an emphasis on phase estimation, introducing a related new variant of self-coherent postprocessing not based on a recursive approach and providing a more streamlined derivation,

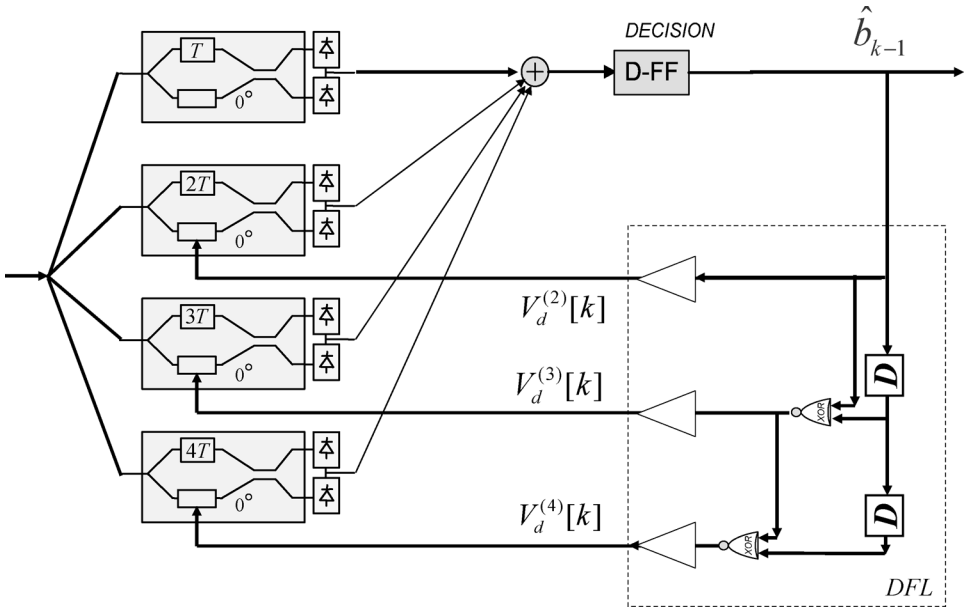

Fig. 11. Five-symbol DBPSK ($D = 5, M = 2$) receiver using the second class of architectures. The DFL now consists of a driver generating three drive voltages $\{0, V_\pi\}$ through the logic shown, consisting of XOR gates and delays.

A. Optical Preprocessing Revisited

We first briefly review this architecture, in the spirit of Section III, but in a notation more suitable for comparison with postprocessing. The generic term in the summation (16) forming the synthetic LO is identified as an estimate of $\tilde{A}_{k-1}$ in terms of $\tilde{r}_{k-m}$, denoted

$$\hat{\tilde{A}}_{k-1}^{(k-m)} \equiv \hat{\tilde{s}}_{k-1}\hat{\tilde{s}}_{k-2}\cdots\hat{\tilde{s}}_{k-m+1}\tilde{r}_{k-m}$$

with the subscript indicating the symbol targeted for estimation while the superscript indicates the symbol acted upon. In particular, we have $\hat{\tilde{A}}_{k-1}^{(k-1)} = \tilde{r}_{k-1}$. The buildup of the self-coherent reference is then described as a summation of such multiple estimate terms for the noiseless reference $\tilde{r}_{k-1}$

$$\tilde{R}_{k-1} = \tilde{\hat{A}}_{k-1}^{(k-1)} + \tilde{\hat{A}}_{k-1}^{(k-2)} + \tilde{\hat{A}}_{k-1}^{(k-3)} + \cdots + \tilde{\hat{A}}_{k-1}^{(k-D+1)} \quad (50)$$

in terms of observations at times $k-1, k-2, \ldots, k-D+1$.

Assuming the noiseless case—or, equivalently, taking an expectation—all estimate terms reduce to $\left\langle \tilde{\hat{A}}_{k-1}^{(k-m)} \right\rangle = \tilde{A}_{k-1}$ and the summation (50) of $D-1$ such equal terms yields a reinforced mean reference $\left\langle \tilde{R}_{k-1} \right\rangle = (D-1)\tilde{A}_{k-1}$, whereas the noise in these terms builds up incoherently. Hence the phase-noise variance is reduced by a factor of $D-1$, as seen in Section III.

B. Electronic Postprocessing

In this architecture (Fig. 13), decision statistics $\tilde{q}_T^{re}[k]$, $\tilde{q}_T^{im}[k]$ collected in a complex statistic

$$\tilde{q}_T'[k] = \tilde{r}_k\tilde{r}_{k-1}^* e^{j\pi/4} = \tilde{q}_T^{re}[k] + j\tilde{q}_T^{im}[k] \quad (51)$$

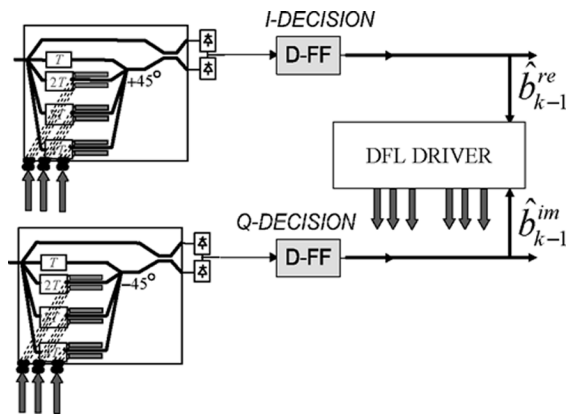

Fig. 12. A five-symbol DQPSK receiver using the third class of SC preprocessing architectures, based on a novel DI device with interferometric feedback. The coherent synthetic LO (improved reference) $\bar{R}_{k-1}$ is generated in the lower arm of the interferometer by summing $\bar{r}_{k-1}$ with phase-rotated versions of $\bar{r}_{k-2}, \bar{r}_{k-3}, \bar{r}_{k-4}$, with the phase rotations applied by active phase modulation via electrodes fed by three electrical transmission lines as shown. The LO is phase-shifted by $\pm 45°$ and mixed with the signal $\bar{r}_k$ in the upper arm via the directional coupler, followed by balanced photodetection. The drive voltages generated by the DFL driver, corresponding to rotation increments requisite to generate the improved reference, are, respectively, applied to the transmission lines feeding the phase-shifting electrodes in the two devices.

are generated in an optical front-end identical to that of conventional DPSK, containing one or two DIs in quadrature (just one DI for DBPSK). While the optical front-end is kept simple, the postprocessing is more demanding, as the sufficient statistics $\tilde{q}_T'[k], \tilde{q}_T'[k-1], \ldots, \tilde{q}_T'[k-D+1]$ (comprising a moving window of D successive observations of the outputs of the two I&Q DIs) must be analog-to-digital converted in order to be processed digitally.

As an auxiliary step, assume that the decision symbol $\hat{\tilde{s}}_k$ were available at the receiver at time k (this would be noncausal, as the slicer decision on its input at time k is actually obtained

pending one clock delay, at time $k-1$). Then, the following improved decision statistic would in principle be generated by soft-processing the DI outputs as well as the DF samples

$$\begin{aligned} q'_k &= \tilde{q}'_T[k] + \hat{\tilde{s}}_k \tilde{q}'_T[k-1]\hat{\tilde{s}}^*_{k-1} + \hat{\tilde{s}}_k \hat{\tilde{s}}_{k-1}\tilde{q}'_T[k-2]\hat{\tilde{s}}^*_{k-2}\hat{\tilde{s}}^*_{k-1} + \cdots \\ &= e^{j\pi/4}(\tilde{r}_k\tilde{r}^*_{k-1} + \hat{\tilde{s}}_k\tilde{r}_{k-1}\tilde{r}^*_{k-2}\hat{\tilde{s}}^*_{k-1} \\ &\quad + \hat{\tilde{s}}_k\hat{\tilde{s}}_{k-1}\tilde{r}_{k-2}\tilde{r}^*_{k-3}\hat{\tilde{s}}^*_{k-2}\hat{\tilde{s}}^*_{k-1}\cdots) \\ &= \tilde{r}_k\tilde{r}^*_{k-1}e^{j\pi/4} + \hat{\tilde{A}}_k^{(k-1)}\hat{\tilde{A}}_{k-1}^{(k-2)*}e^{j\pi/4} \\ &\quad + \hat{\tilde{A}}_k^{(k-2)}\hat{\tilde{A}}_{k-1}^{(k-3)*}e^{j\pi/4}\cdots. \end{aligned} \tag{52}$$

The generic term in this summation is [recalling (5)]

$$\begin{aligned} &\hat{\tilde{s}}_k\hat{\tilde{s}}_{k-1}\cdots\hat{\tilde{s}}_{k-m+1}\tilde{r}_{k-m}\tilde{r}^*_{k-m-1}\hat{\tilde{s}}^*_{k-m}\cdots\hat{\tilde{s}}^*_{k-1}e^{j\pi/4} \\ &= \tilde{s}_{[k-m,k]}\tilde{q}'_T[k-m]\tilde{s}^*_{[k-m-1,k-1]} \\ &= \tilde{s}_{[k-m,k-1]}\hat{\tilde{s}}_k\tilde{q}'_T[k-m]\hat{\tilde{s}}^*_{k-m}\tilde{s}^*_{[k-m,k-1]} \\ &= \hat{\tilde{s}}_k\tilde{q}'_T[k-m]\hat{\tilde{s}}^*_{k-m} = \hat{\tilde{s}}'_k\tilde{q}'_T[k-m]\hat{\tilde{s}}'^*_{k-m}. \end{aligned} \tag{53}$$

It then follows that

$$\tilde{q}'_k = \tilde{q}'_T[k] + \hat{\tilde{s}}'_k \sum_{k=1}^{D-1} \tilde{q}'_T[k-m]\hat{\tilde{s}}'^*_{k-m}. \tag{54}$$

In the absence of noise, each of the terms in the summations (52) or (54) is given by $\tilde{A}_k^{(k-m+1)}\tilde{A}_k^{(k-m)*} = \tilde{A}_k\tilde{A}^*_{k-1} = A_c^2\tilde{s}_k$ for all m, i.e., all terms in the summation (52) are identical, reinforcing to $(D-1)A_c^2\tilde{s}_k$, while it may be seen that the noise fluctuations of each of these terms are independent, yielding an averaging effect providing self-coherent gain for the decision statistic q'_k, which carries the phase modulation information.

To overcome the noncausality of $\hat{\tilde{s}}_k$, we compromise on replacing this term by a nearly equal one, practically realizable (albeit more noisy), as it is based on the raw observation $\tilde{\hat{q}}_k$

$$\hat{\tilde{s}}'_k = \frac{e^{j\pi/4}\tilde{A}_k\tilde{A}^*_{k-1}}{A_c^2} \approx \frac{e^{j\pi/4}\tilde{r}_k\tilde{r}^*_{k-1}}{A_c^2} = \frac{\tilde{q}'_T[k]}{A_c^2}. \tag{55}$$

Substituting this approximation in (54) yields the following realizable sufficient statistic, used in actual implementation

$$q'_k = \tilde{q}'_T[k] + A_c^{-2}\tilde{q}'_T[k]\sum_{k=1}^{D-1}\tilde{q}'_T[k-m]\hat{\tilde{s}}^*_{k-m}. \tag{56}$$

In the absence of noise, the approximation (55) becomes a strict equality, such that (56) retrieves (52), which was seen to provide an SC gain factor of $D-1$. The approximation remains valid in phase-noise limited systems, as in the case of DPSK systems.

IX. Discussion and Conclusions

This paper was devoted to explaining the self-coherent detection principle, introducing and comparing several realizations based on the optical preprocessing and electronic postprocessing approaches.

Below we compare the main attributes of the self-coherent detection versus those of the emerging digital coherent detection.

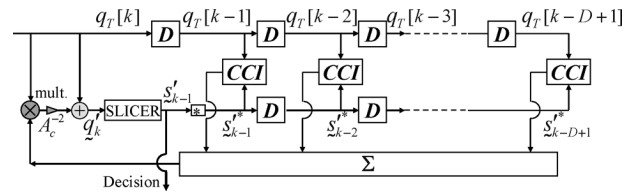

Fig. 13. Block diagram of the postprocessing algorithm (56). The indicated electrical-domain processing can be performed in an analog way (with the most difficult component being the four-quadrant multiplier designated "mult.") or digitally, after A/D conversion. All the lines in this figure describe complex-valued connections, i.e., real–imaginary signal pairs. The system input is the pair of outputs of conventional I&Q DIs (A/D converted in the digital implementation).

A. Self-Coherent Detection—Pros

- Eliminates the optical local oscillator and optical phase-locked loop required in coherent detection.
- Can provide sensitivity approaching coherent detection.
- Might not require polarization control or diversity (provided polarization independent DIs are used and polarization multiplexing is not used at the transmitter, i.e., a unique polarization state is being modulated).
- Allows for the detection of multilevel DPSK signals [26], [29].
- May allow for the digital compensation of chromatic dispersion [27], [28], nonlinear phase noise [30], and polarization-mode dispersion [30].

B. Self-Coherent Detection—Cons

- May require higher analog-to-digital conversion resolution and more digital signal-processing power than a digital coherent receiver.
- Requires optical filtering to reject noise and adjacent channels (which may not be a practical issue in most wavelength-division multiplexing systems)

C. Digital Coherent Detection [31]–[38]—Pros

- Allows the digital reconstruction of the signal field, permitting compensation of various transmission impairments such as chromatic and polarization-mode dispersion and nonlinear phase noise.
- Provides wavelength selectivity through RF and digital filters rather than optical filters.
- Provides the highest receiver sensitivity.
- Applicable to arbitrary I&Q, not necessarily differential, modulated formats (PSK, QAM, etc.)

Research challenges still outstanding are the evaluation of performance of self-coherent systems and further architectural work aiming at additional reduction of realization complexity.

The precise noise analysis and error probability performance of the pre- and postprocessing self-coherent scheme is deferred to a future publication. The BER analysis will account for three key impairments affecting differential phase transmission over a fiber-optic link, namely, nonlinear SPM-induced phase noise, ASE-induced linear phase noise, and laser source phase noise. It will be seen that the two schemes (pre- versus postprocessing) have nearly equivalent performance, both approaching that of coherent detection. Hence, the selection of one scheme versus

the other ought to be driven by complexity-of-realization considerations, e.g., the complexity of integrated-optic front-end and analog electronics in the preprocessing case, versus the availability of high-speed analog-to-digital converters and the complexity of the digital signal processors in the postprocessing case.

A related promising research direction concerns a class of SC realizations based on hard-detection [5], [39].

REFERENCES

[1] A. H. Gnauck and P. J. Winzer, "Optical phase-shift-keyed transmission," *J. Lightw. Technol.*, vol. 23, no. 1, pp. 115–130, Jan. 2005.

[2] M. Nazarathy and Y. Yadin, "Simplified decision feedback-aided multi-chip binary DPSK receivers," *IEEE Photon. Technol. Lett.*, vol. 18, no. 16, pp. 1771–1773, Aug. 2006.

[3] M. Nazarathy and Y. Yadin, "Approaching coherent homodyne performance with direct detection low-complexity advanced modulation formats," in *Proc. Coherent Opt. Technol. Applicat. (COTA)*, Whisler, Canada, Jun. 28–30, 2006, CThB5.

[4] M. Nazarathy, X. Liu, Y. Yadin, and M. Orenstein, "Multi-chip detection of optical differential phase-shift keying and complexity reduction by interferometric decision feedback," in *Proc. Eur. Conf. Opt. Commun. (ECOC2006)*, Cannes, France, Sep. 24–28, 2006, poster paper We3.P.79.

[5] L. Christen, Y. K. Lize, S. Nuccio, X. Liu, M. Nazarathy, and A. E. Willner, "DPSK error correction using multi-bit detection for enhanced sensitivity and compensation of impairments," in *Proc. OFC'07*, Anaheim, CA, Mar. 2007, poster paper JThA50.

[6] M. Nazarathy, Y. Yadin, Y. Lize, L. Christen, A. Willner, and M. Orenstein, "Enhanced self-coherent optical decision-feedback-aided detection of multi-symbol M-DPSK/PolSK in particular 8-DPSK/BPolSK at 40 Gbps," in *Proc. OFC'07*, Anaheim, CA, Mar. 2007, poster paper JWA43.

[7] S. Calabro, D. van den Borne, S. L. Jansen, G. D. Khoe, and H. de Waardt, "Improved detection of homodyne phase shift keying through multi-symbol phase estimation," in *Proc. ECOC2005*, 2005, We4.P. 118..

[8] D. van den Borne *et al.*, "Differential quadrature phase shift keying with close to homodyne performance based on multi-symbol phase estimation," in *Proc. Inst. Elect. Eng. Seminar Opt. Fibre Commun. Electron. Signal Process.*, London, U.K., Dec. 15, 2005, pp. 12/1–12/7.

[9] X. Liu, "Data-aided multi-symbol phase estimation for receiver sensitivity enhancement in optical DQPSK," in *Proc. COTA'06*, Whistler, Canada, 2006, paper CThB4.

[10] X. Liu, "Receiver sensitivity improvement in optical DQPSK and DQPSK/ASK through data-aided multi-symbol phase estimation," in *Proc. ECOC'06*, Cannes, France, 2006, We2.5.6.

[11] X. Liu, S. Chandrasekhar, A. H. Gnauck, C. R. Doerr, I. Kang, D. Kilper, L. L. Buhl, and J. Centanni, "DSP-enabled compensation of demodulator phase error and sensitivity improvement in direct-detection 40-Gb/s DQPSK," in *Proc. ECOC'06*, Cannes, France, 2006, postdeadline paper Th4.4.5.

[12] D. Divsalar and M. K. Simon, "Multiple-symbol differential detection of MPSK," *IEEE Trans. Commun.*, vol. 38, no. 3, pp. 300–308, Mar. 1990.

[13] F. Edbauer, "Bit error rate of binary and quaternary DPSK signals with multiple differential feedback detection," *IEEE Trans. Commun.*, vol. 40, no. 3, pp. 457–460, Mar. 1992.

[14] F. Adachi *et al.*, "Decision feedback multiple-symbol differential detection for M-ary DPSK," *Electron. Lett.*, vol. 29, pp. 1385–1387, 1993.

[15] H. Leib, "Data-aided noncoherent demodulation of DPSK," *IEEE Trans. Commun.*, vol. 43, pp. 722–725, 1995.

[16] M. Nazarathy and E. Simony, "Multi-chip differential phase encoded optical transmission," *IEEE Photon. Technol. Lett.*, vol. 17, no. 5, pp. 1133–1135, May 2005.

[17] X. Liu, "Digital implementation of soft detection for 3-chip-DBPSK with improved receiver sensitivity and dispersion tolerance," in *Proc. OFC*, 2006, OTuI2.

[18] Y. Yadin, A. Bilenca, M. Nazarathy, and M. Orenstein, "Multi-chip differential phase shift keyed transmission over (non-)nonlinear optical channels," *J. Lightw. Technol.*, vol. 25, no. 6, pp. 1431–1440, Jun. 2007.

[19] M. Nazarathy, X. Liu, L. Christen, Y. Lize, and A. Willner, "Self-coherent decision-feedback-directed 40 Gbps DQPSK receiver," *IEEE Photon. Technol. Lett.*, vol. 19, no. 6, pp. 828–839, Jun. 2007.

[20] I. Kang, C. Xie, C. Dorrer, and A. Gnauck, "Implementations of alternate-polarisation differential-phase-shift-keying transmission," *Electron. Lett.*, vol. 40, no. 5, pp. 333–335, Mar. 2004, .

[21] A. H. Gnauck, G. Raybon, P. G. Bernasconi, J. Leuthold, C. R. Doerr, and L. W. Stulz, "1-Tb/s (6×170.6 Gb/s) transmission over 2000-km NZDF using OTDM and RZ-DPSK format," *IEEE Photon. Technol. Lett.*, vol. 15, no. 11, pp. 1618–1620, Nov. 2003.

[22] X. Liu, C. Xu, and X. Wei, "Performance analysis of time/polarization multiplexed 40-Gb/s RZ-DPSK DWDM transmission," *IEEE Photon. Technol. Lett.*, vol. 16, no. 1, pp. 302–304, Jan. 2004.

[23] C. Wree, N. Hecker-Denschlag, E. Gottwald, P. Krummrich, J. Leibrich, E. D. Schmidt, B. Lankl, and W. Rosenkranz, "High spectral efficiency 1.6-b/s/Hz transmission (8×40 Gb/s with a 25-GHz grid) over 200-km SSMF using RZ-DQPSK and polarization multiplexing," *IEEE Photon. Technol. Lett.*, vol. 15, no. 9, pp. 1303–1305, Sept. 2003.

[24] A. H. Gnauck, P. J. Winzer, L. L. Buhl, T. Kawanishi, T. Sakamoto, M. Izutsu, and K. Higuma, "12.3-Tb/s C-band DQPSK transmission at 3.2 b/s/Hz spectral efficiency," in *Proc. ECOC'06*, 2006, postdeadline paper Th4.1.2.

[25] F. Seguin and F. Gonthier, "Tuneable all-fiber, delay-lineinterferometer for DPSK demodulation," in *Proc. OFC2005*, 2005, OFL5.

[26] X. Liu, "Generalized data-aided multi-symbol phase estimation for improving receiver sensitivity in direct-detection optical M-ary DPSK," *Opt. Expr.*, vol. 15, pp. 2927–2939, 2007.

[27] N. Kikuchi, K. Mandai, S. Sasaki, and K. Sekine, "Proposal and first experimental demonstration of digital incoherent optical field detector for chromatic dispersion compensation," in *Proc. ECOC'06*, postdeadline paper Th4.4.4.

[28] X. Liu and X. Wei, "Electronic dispersion compensation based on optical field reconstruction with orthogonal differential direct-detection and digital signal processing," in *Proc. OFC'07*, 2007, OTuA6.

[29] N. Kikuchi, K. Mandai, K. Sekine, and S. Sasaki, "First experimental demonstration of single-polarization 50-Gbit/s 32-level (QASK and 8-DPSK) incoherent optical multilevel transmission," in *Proc. OFC'07*, 2007, postdeadline paper PDP21.

[30] X. Liu, "DSP-enhanced differential direct-detection for DQPSK and M-ary DPSK," in *Proc. ECOC'07*, 2007, Invited Paper 7.2.1.

[31] F. Derr, "Coherent optical QPSK intradyne system: Concept and digital receiver realization," *J. Lightw. Technol.*, vol. 10, no. 9, pp. 1290–1296, Sep. 1992.

[32] M. Taylor, "Coherent detection method using DSP for demodulation of signal and subsequent equalization of propagation impairments," *IEEE Photon. Technol. Lett.*, vol. 16, no. 2, pp. 674–676, Feb. 2004.

[33] R. Noe, "PLL-free synchronous QPSK polarization multiplex/diversity receiver concept with digital I&Q baseband processing," *IEEE Photon. Technol. Lett.*, vol. 17, no. 4, pp. 887–889, Apr. 2005.

[34] K. Kikuchi, "Phase-diversity homodyne detection of multilevel optical modulation with digital carrier phase estimation," *IEEE J. Sel. Topics Quantum Electron.*, vol. 12, no. 4, pp. 563–570, Jul.–Aug. 2006.

[35] A. Leven, N. Kaneda 1, U.-V. Koc, and Y.-K. Chen, "Coherent receivers for practical optical communication systems," in *Proc. OFC'07*, 2007, OThK4.

[36] G. Charlet, J. Renaudier, M. Salsi, H. Mardoyan, P. Tran, and S. Bigo, "Efficient mitigation of fiber impairments in an ultra-long haul transmission of 40 Gbit/s polarization-multiplexed data, by digital processing in a coherent receiver," in *Proc. OFC'07*, 2007, postdeadline paper PDP17.

[37] C. Laperle, B. Villeneuve, Z. Zhang, D. McGhan, H. Sun, and M. O'Sullivan, "Wavelength division multiplexing (WDM) and polarization mode dispersion (PMD) performance of a coherent 40 Gbit/s dual-polarization quadrature phase shift keying (DP-QPSK) transceiver," in *Proc. OFC'07*, 2007, postdeadline paper PDP16.

[38] C. R. S. Fludger, T. Duthel, D. van den Borne, C. Schulien, E.-D. Schmidt, T. Wuth, E. de Man, G. D. Khoe, and H. de Waardt, "10×111 Gbit/s, 50 GHz spaced, POLMUX-RZ-DQPSK transmission over 2375 km employing coherent equalisation," in *Proc. OFC'07*, 2007, postdeadline paper PDP22.

[39] Y. K. Lize, L. Christen, M. Nazarathy, S. Nuccio, J.-Y. Yang, A. E. Willner, and R. Kashyap, "Combination of optical and electronic logic gates for error correction in multipath differential demodulation," *Opt. Expr.*, vol. 15, pp. 6831–6839, 2007.

Moshe Nazarathy (SM'05) received the B.Sc. degree *(cum laude)* and the Dr.Sci.EE. degrees from the Technion—Israel Institute of Technology, Haifa, Israel.

He is a tenured associate professor with the Electrical Engineering Department at the Technion. He was a visiting associate professor with the same department from 2002 to 2007. From 1982 to 1984, he held a post-doctoral position with the Information Systems Laboratory, Stanford University, Stanford, CA. From 1984 to 1988, he was with Hewlett Packard's Photonics and Instruments Laboratory, attaining the rank of Principal Engineer. He co-founded Harmonic Inc., where he served as Senior VP R&D, corporate CTO, and General Manager of the company's Israeli subsidiary. He was also a member of Harmonic's board of directors from 1988 to 2001. He also serves as a Technology Venture Partner with Giza Ventures, which is and an advisor to Vertex. Both are leading VC firms in Israel. He is also on the advisory board of five start-up companies.

Xiang Liu (M'00–SM'04) received the Ph.D. degree in applied physics from Cornell University, Itahaca, NY, in 2000.

Since joining Bell Labs, Holmdel, NJ, as a Member of Technical Staff in 2000, he has been primarily working on high-speed optical communication technologies, including advanced modulation formats and detection schemes, fiber nonlinearity, and PMD mitigation. He has authored/co-authored more than 140 journal and conference papers and holds more than ten international patents.

Louis Christen (M'07), photograph and biography not available at the time of publication.

Yannick K. Lize (S'05) received the B.Sc. degree in physics from Concordia University, Montreal, QC, Canada, in 2001, the M.Sc. degree in 2004 from École Polytechnique de Montreal, and the Ph.D.degree in 2007 from École Polytechnique de Montreal, in collaboration with the University of Southern California, Los Angeles.

He has done internships at the Centre for Ultrahigh bandwidth Devices for Optical Systems (CUDOS), Sydney, Australia, under Prof. B. J. Eggleton, working on silica nanostructured nanowires, at the Centre for Ultra-Broadband Information Networks (CUBIN), Melbourne, Australia, under Prof. R. Tucker and T. Nirmalathas, working on PMD emulation, at Alcatel/Lucent Bell Labs, Crawford Hill, NJ, under Dr. R. Giles and Dr. X. Liu on DPSK optical packet encoding, and at the University of Southern California under Prof. A. E. Willner on DPSK demodulation and optical error correction. He is currently director of R&D for advanced modulation format devices at ITF Laboratories, Montreal, leading the development efforts on next-generation DPSK, DQPSK, and coherent demodulation devices.

Dr. Lize is a recipient of the IEEE LEOS Graduate Student Fellowship in 2007, the Canadian Institute for Photonic Innovations (CIPI) student exchange grant in 2004, 2005, and 2006, the SPIE Scholarship in Optical Science and Engineering in 2005 and 2006, the OSA/Milton Chang student travel grant in 2005 and 2006, the 2003 and 2005 Student Presenter Award from the Canadian Association of Physicists, the 2004 New Focus student travel grant, and the Natural Sciences and Engineering Research Council of Canada eMPOWR research bursary in 2004. He has 15 peer-reviewed publications to his credit, as well as 35 international conference papers and five patents. He is a member of IEEE LEOS, IEEE ComSoc, OSA, and SPIE.

Alan E. Willner (S'87–M'88–SM'93–F'04) received the B.S. degree in physics from Yeshiva University, New York, in 1982 and the Ph.D. degree in electrical engineering from Columbia University, New York, in 1988.

He was with AT&T Bell Laboratories and Bellcore. He is currently a Professor of electrical engineering at the University of Southern California (USC), Los Angeles. He has 625 publications, including one book and 23 patents. His research interests include optical communications.

Prof. Willner is a Fellow of the Optical Society of America (OSA) and was a Fellow of the Semiconductor Research Corporation. His professional activities have included the following: President of the IEEE Lasers and Electro-Optics Society (LEOS), Editor-in-Chief of the IEEE/OSA JOURNAL OF LIGHTWAVE TECHNOLOGY, Editor-in-Chief of the IEEE JOURNAL OF SELECTED TOPICS IN QUANTUM ELECTRONICS, Cochair of the OSA Science and Engineering Council, General Cochair of the Conference on Lasers and Electro-Optics, Editor-in-Chief-elect of the OSA Optics Letters, Chair of the IEEE TAB Ethics and Conflict Resolution Committee, General Chair of the LEOS Annual Meeting Program, Program Co-Chair of the OSA Annual Meeting, Member of the USC Board of Trustees Subcommittee on Student Affairs, and Steering and Program Committee Member of the Conference on Optical Fiber Communications. He has received the National Science Foundation (NSF) Presidential Faculty Fellows Award from the White House, the Packard Foundation Fellowship, the NSF National Young Investigator Award, the Fulbright Foundation Senior Scholars Award, the IEEE LEOS Distinguished Traveling Lecturer Award, the USC University-Wide Award for Excellence in Teaching, the Eddy Award from Pennwell for the Best Contributed Technical Article, and the Armstrong Foundation Memorial Prize for the highest ranked electrical engineering graduate student.