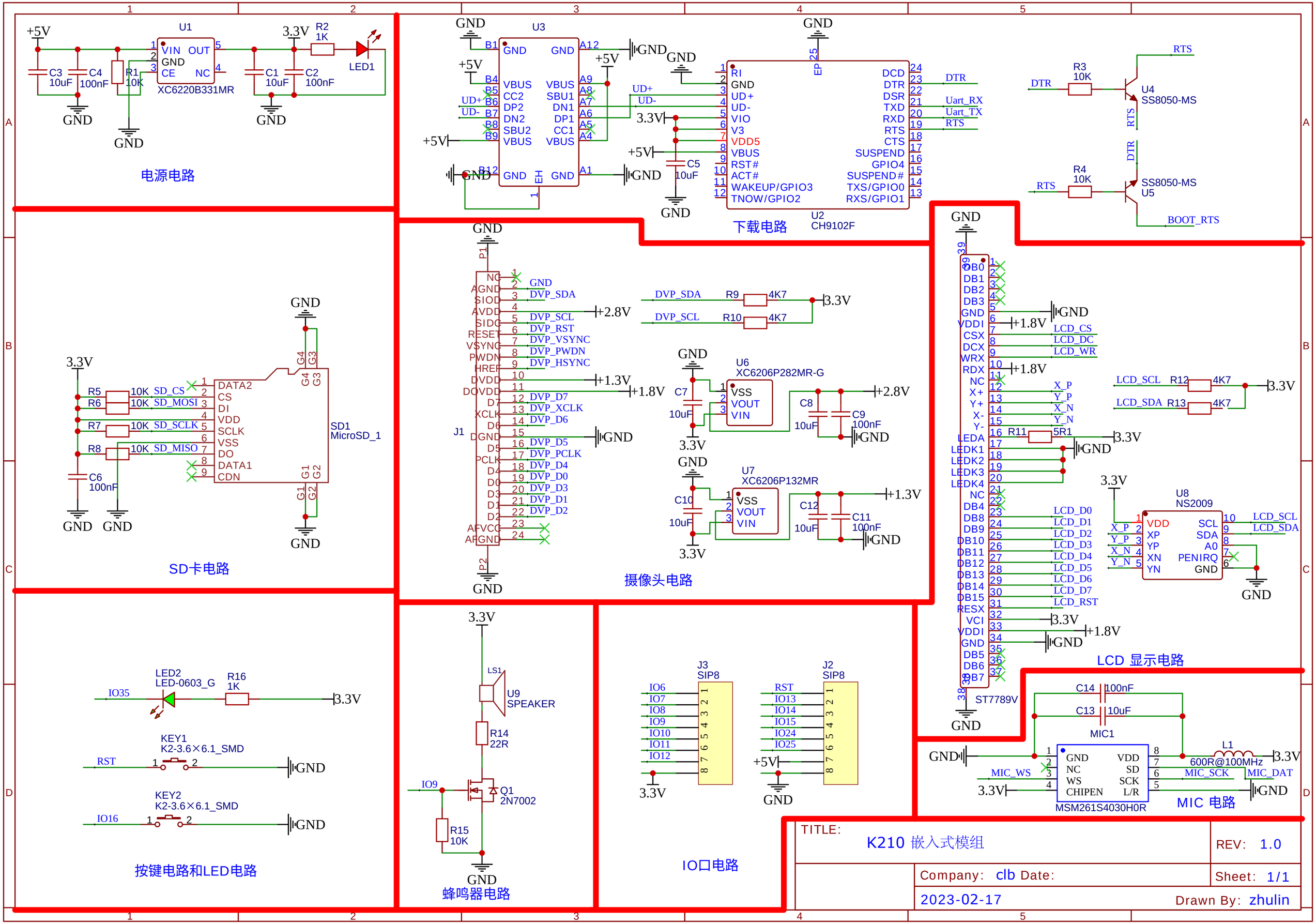
电源电路
U1
XC6220B331MR
下载电路
U2
CH9102F
U3
U4
SS8050-MS
U5
SS8050-MS
SD卡电路
SD1
MicroSD_1
摄像头电路
J1
U6
XC6206P282MR-G
U7
XC6206P132MR
LCD 显示电路
U8
NS2009
ST7789V
MIC 电路
MIC1
MSM261S4030H0R
按键电路和LED电路
LED2
LED-0603_G
KEY1
K2-3.6×6.1_SMD
KEY2
K2-3.6×6.1_SMD
蜂鸣器电路
U9
SPEAKER
Q1
2N7002
IO口电路
J3
SIP8
J2
SIP8
TITLE:
K210 嵌入式模组
REV: 1.0
Company: clb Date:
Sheet: 1/1
2023-02-17
Drawn By: zhulin

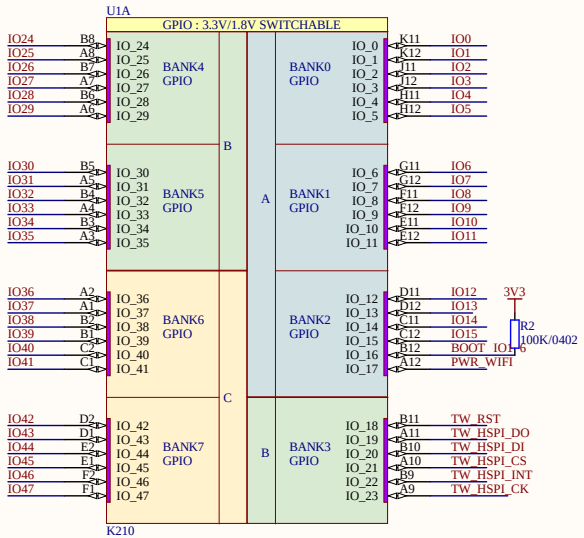

K210-A

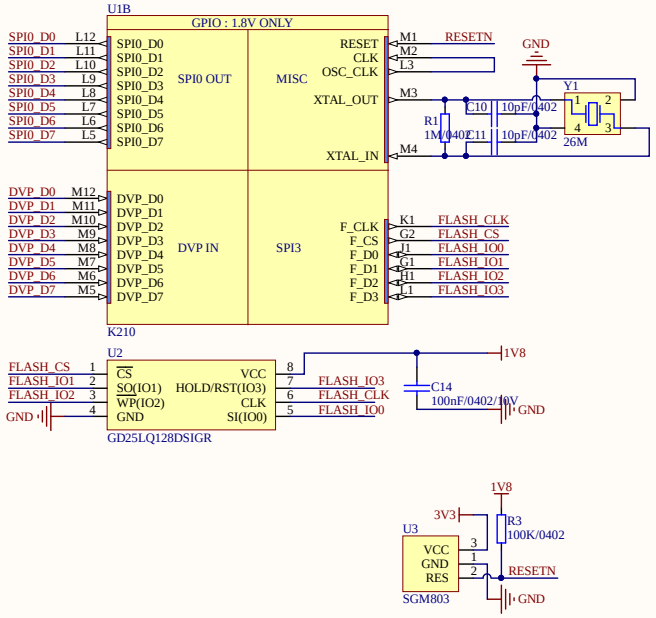

K210-B

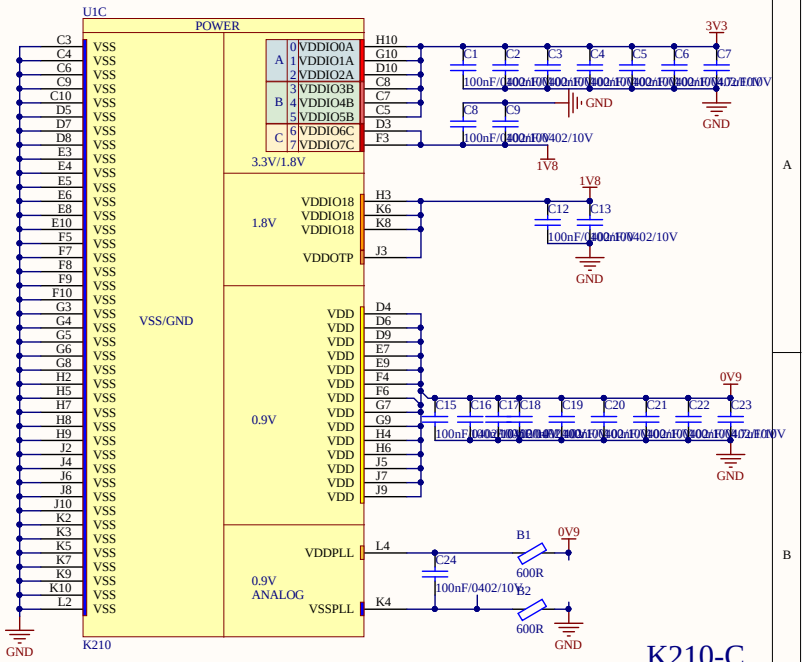

K210-C

POWER

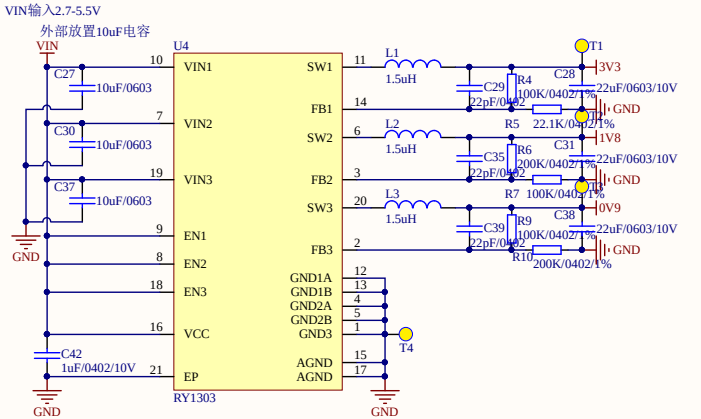

Title		
Size A3		
Date:		
File:		