Applied Mechanics and Materials Vols 88-89 (2011) pp 22-28 *Online: 2011-08-22*
© (2011) Trans Tech Publications, Switzerland
doi:10.4028/www.scientific.net/AMM.88-89.22

Assembly Sequence Planning for Aircraft component based on Improved Clashes Matrix

Liuying Yang, Gang Zhao, Binbin Wu, Guangrong Yan

School of Mechanical Engineering and Automation,Beihang University, Beijing 100191, China

cecily_1020@hotmail.com, zhaog@buaa.edu.cn, wubinbinxgd@163.com, ygr@caxa.com

Key words: assembly sequence planning; improved interference matrix; genetic algorithm; assembly direction; assembly feasibility

Abstract. The aircraft parts contain the information of a great number of curves and surfaces, which makes it a big challenge for the aircraft components' Assembly Sequence Planning (ASP) processes. The traditional interference matrix has limitation of expressing the assembly direction and can easily lead to the failure of ASP optimization. Hence, an improved interference matrix is provided in this paper to deal with the aircraft ASP problem based on the Genetic Algorithms (GA). With the mainly consideration of assembly time according to the assembly sequence evaluation criteria, the objective function is established and evaluated. This paper presents an application of the method in the aircraft cabin door assembly process supported by an 863 program. Meanwhile, the verification of the approach is shown in the practical example on MATLAB platform.

Introduction

The term of ASP [1] means the processes of optimizing an assembly sequence based on a certain production proposal through possibility verification, evaluation and comparison in order to select the optimal sequence and accomplish the objectives for assembly. Meanwhile, ASP is a significant link during the virtual production assembly and one of the determinants which have great influence on the complexity and reliability of the whole processes.

Since the 1990's, modern intelligent optimization algorithms have been developed including fuzzy petri net algorithm, GA, simulated annealing algorithm, ant colony algorithm etc. The powerful computing and searching provides a possibility of good solution for the ASP. The settler, F.Bonneville [2], associates the ASP problem with GA at the first time. Derived from the thought of natural evolution, GA is an algorithm that helps the population evolution and obtains the optimal individual based on the objective function. The key point of implementation is defining the objective function which is based on the evaluation of ASP. Some factors are used to establish the objective function. To be advanced, Liu[3] demonstrates a model of assembly cost evaluation based on the factors affecting the cost. Similarly, this paper describe a model of assembly time based on the application of GA, discuses the methods of establishing the objective function with the factors and improves the ASP technology.

The difficulty of aircraft assembly is not only the great quantity of parts, but also the large deflection of sheet metal and irregular parts. The unsuitable assembly sequence can lead to unnecessary complexity and resources waste. Considering the space limitation of traditional solutions, this report presents an improved interference matrix model with the advantage of create optimized assembly sequence through extending the representation of assembly direction. This improved solution can solve the problem of assembly sequences in modern aerospace industry, keep the high performance of production assembly and short the R&D Cycle. At the same time, this improved method has positive influence on the virtual assembly research.

All rights reserved. No part of contents of this paper may be reproduced or transmitted in any form or by any means without the written permission of Trans Tech Publications, www.ttp.net. (ID: 128.42.202.150, Rice University, Fondren Library, Houston, USA-16/04/15,16:04:15)

Interference matrix model

Tranditional interference matrix

With the development of assembly sequence planning algorithm, there are more and more representation schemes of assembly modeling. It can be divided into three types: Graph-based relational model, the hierarchical model tree structure and object-oriented model. Among them, the matrix is the most effective way to represent the relational model, which is easier for the computer to be recognized and represented than graph-based model, and is widely applied to the Intelligent Algorithm. The interference model is first proposed by the G.Dini and M.Santochi[4], which is limited to the orthogonal direction.

The component interference matrix indicates interference between parts when moving to the infinity towards a certain direction [5]. In the traditional interference matrix, it is usually assumed that the disassembly direction is based on the orthogonal direction in the coordinate system, that is, $\pm x, \pm y, \pm z$ direction. On the basis of that, deal the GA, ant colony algorithm etc. Peng[6] proposes the concept of an integrated interference matrix that integrates six interference matrix on different directions into one, which makes the computation process more simple.

Improved interference matrix

It may cause wrong solution of assembly sequence when adopting the traditional interference matrix in the orthogonal directions. For the parts with information of plenty of curves and surfaces may interfere with each other in those directions while assembling or disassembling. Yu[7] shows a extended interference matrix in non-orthogonal directions based on the screening of priority rules, which make up the gaps of this area. Hence, this paper introduces and improves this interference into another one to solve the assembly sequence problems.

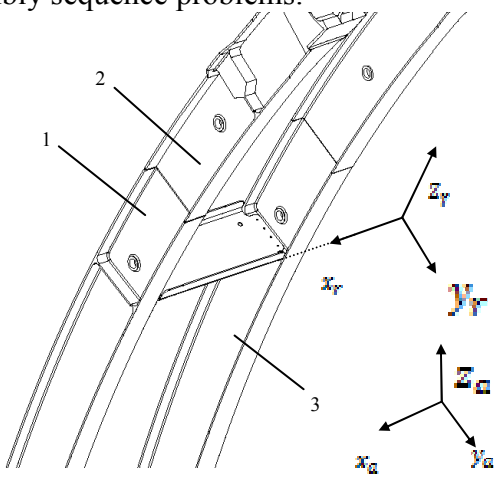

Fig.1. Parts position in the absolute coordinate system and relative coordinate system

As is shown in the Fig.1 is a component of an aircraft. In the CAD system, there are two coordinate systems for positioning: relative coordinate system $\{X_a, Y_a, Z_a\}$ and absolute coordinate system $\{X_r, Y_r, Z_r\}$. Part modeling mainly refer to the former one, while the assemble constraints refer to the other. Part 1 and part 3 contain curves and surfaces information. Supposing the two parts are fixed, the feasible disassembly direction of part 2 has to be discussed. What can be drawn from the Fig.1 is that $+x_a, +y_a, +x_r, +y_r, -x_r, -y_r$ are the infeasible direction in both two coordinate systems, so that a further judgment must be done along the $+z_a, +z_r$ direction. In the definition of traditional interference matrix, if part 2 was disassembled along the $+z_a$ direction in the absolute coordinate system, it must interfere with part 1 and part 3. The result is opposite while disassemble part 2 along the $+z_r$ direction, which illustrate the part 2 can be feasibly assemble and disassemble along the defined non-orthogonal direction.

Because part modeling is based on the relative coordinate system, that can make the derivation of the assembly feasibility more correct. In this paper 6 directions in relative coordinate system are extended based on the absolute one, set the assembly directions to be $d_k = \{\pm x_a, \pm y_a, \pm z_a, \pm x_r, \pm y_r, \pm z_r\}$, then define the improved interference matrix as:

$$A_d = [a_{ij}^{d_k}]_{N\times N} \tag{1}$$

$$a_{ij}^{d_k} = \begin{cases} 0, & \text{disassembled part } P_i \text{ doesn't interfere with part } P_j \text{ in the } d_k \text{ direction} \\ 1, & \text{disassembled part } P_i \text{ interfere with part } P_j \text{ in the } d_k \text{ direction} \end{cases} \tag{2}$$

In the formula given above, N is the total number of parts in the assembly; P_i indicates the ith part in the assembly sequence; $\pm x_a, \pm y_a, \pm z_a$ represent the absolute coordinate system; the $\pm x_r, \pm y_r, \pm z_r$ represent the extended relative coordinate system; $a_{ij}^{d_k}$ shows the status of interference between part P_j and part P_i along the d_k direction. Similarly, $a_{ji}^{d_k}$ depicts the status when part P_i interferes with P_j along the same direction.

In the CAD system (as CATIA), considering the geometry information in the workspace, the assembly path is simplified to a straight path, and then obtain the interference matrix of the assembly through the dynamic clash detection, and then get the interference status in the assembly directions according to the operational formula.

Factors of assembly sequence evaluation

Assembly has great influence on the quality of final products. A real optimized assembly sequence not only meets the geometric constraint requirements, but also considers assembly time and cost. Considering the assembly time, this paper chooses the factors above as criterion of assembly sequence evaluation.

Assembly feasibility

It is the first step of ASP. The improved interference matrix also has the function of ensuring the feasibility of parts in one or more assembly directions. According to the definition of the improved interference matrix in chapter 1.2, the interference status of P_j on the direction of $-x_r, -y_r, -z_r$ is similar with that of P_i on $+x_r, +y_r, +z_r$. So it is only necessary to get interference matrixes in $+x_a, +y_a, +z_a, +x_r, +y_r, +z_r$ directions.

Because of the certain order of parts assembly, the parts assembly directions are relevant to that of the completed subassembly. Set $S = \{P_1, P_2, \ldots,$ as an existing assembly sequence and part interference status in each direction of $d_k = \{\pm x_a, \pm y_a, \pm z_a, \pm x_r, \pm y_r,$ would be:

$$f_{d_k}(P_i) = \sum_{j=1}^{m} a_{ji}^{d_k} \tag{3}$$

If $f_{d_k}(P_i) = 0$, it means there is no interference during this assembly process. It proves the feasibility of the part P_i on d_k direction. Otherwise, the sequence is unfeasible. Figure out the intersection on the 12 directions of part P_i:

$$I_f = \bigcap_{d_k=1}^{12} f_{d_k}(P_i) \tag{4}$$

In the formula (4), $I_f = 0$ means part P_i has at least one possible assembly direction among the twelve. Otherwise, there is interference on every direction and the sequence should be rejected.

Assembly concurrency

A common product modeled by CAD system is always composed of multiple constrained subassemblies which made up by parts and components. The reasonable method of ASP is dividing the complex assembly into different subassemblies and designing the sequence of each subassembly to reduce the total assembly time. According to the subassembly task, like aircraft assembly, the more parts working at the same time the better[8]. This concept of concurrency can greatly shrink the whole assembly cycle and enhance the assembly efficiency.

Because of too many parts in the same aircraft product, we always consider parts with the same assembly direction, category, tool and function as one independent assembly unit in order to simplify the complexity of final assembly sequence. Fig.2 shows the beam unit made up by 8 parts used for frame connection.

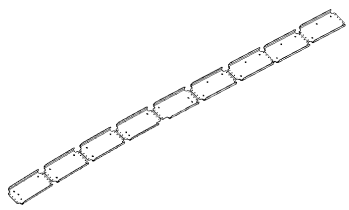

Fig.2. Beam unit with 8 parts

Assembly reorientation

The assembly reorientation means the times of direction changes during the assembly processes. The principle of typical assembly is reducing the times of reorientation to limit the time waste on turning parts and components. If there is an intersection between parts P_i and P_{i-1}, the reorientation is unnecessary during the assembly. Otherwise, there must be at least one time of direction change. According to a common assembly sequence $S = \{P_1, P_2, \dots, P_i\}$, the intersection can figure out the lease times of reorientation. As following:

$$f_1 = \sum_{i=2}^{N} v_i \quad , \quad v_i = \begin{cases} 0, & \text{the same direction} \\ 1, & \text{direction changed} \end{cases} \tag{5}$$

In the formula above, v_i describes the situation of direction change.

Assembly cohesion

Assembly cohesion is used to provide the times of assembly tools change. During the aircraft assembly processes, reduce the times of changing the fixtures can greatly increase the assembly time and enhance the work efficiency. Set the set of tools as $T = \{T_1, T_2, \dots, T_N\}$. The assembly sequence would be $S = \{P_1, P_2, \dots, P_N\}$. So the cohesion could be:

$$f_2 = \sum_{i=2}^{N} g_i \quad , \quad g_i = \begin{cases} 0, & T_i = T_{i-1} \\ 1, & T_i \neq T_{i-1} \end{cases} \tag{6}$$

According to the formula (6), $T_i \neq T_{i-1}$ means that there is one tool change between them.

Optimizing the ASP with GA

Confirming the objective function

The optimization of ASP is belongs to multiple target optimizing problems. To confirm the objective function needs to consider the weight coefficient. Hence, the objective function[9] of assembly sequence can be presented as:

$$f(s) = \begin{cases} \omega_1 f_1 + \omega_2 f_2, & \textit{assembly sequence } S \textit{ is avatlable} \\ c_n N, & \textit{assembly sequence } S \textit{ is unavailable} \end{cases} \tag{7}$$

In the formula above, f_1 and f_2 are the factors of reorientation and cohesion, ω_1 and ω_2 are the weight coefficients, c_n is the penalty factor.

Chromosome encoding

The method used in this paper is multi-parameter cross coding method. $S = \{P_1 P_2 P_3 \dots P_n\}$ means the assembly sequence of parts, and $T = \{T_1 T_2 T_3 \dots T_n\}$ presents the set of assembly tools. Therefore, the genome code is: $P_1 T_1 \vdots P_2 T_2 \vdots P_3 T_3 \vdots \cdots \vdots P_n T_n$.

Confirming the genetic operators

Selection operator: use the proportionate selection; the higher the value of objective function is, the more easily the population retained, and then follow the elitist genetic algorithm.

Crossover operator: partially matched crossover, which means do the two-point crossover operation to the chromosome codes, can be used to modify the genetic values outside the crossover region based on the mapping between the values inside the region.

Mutation operator: randomly choose two genomes of father chromosomes as change points. Then swap the two points and get child chromosomes.

Steps of GA

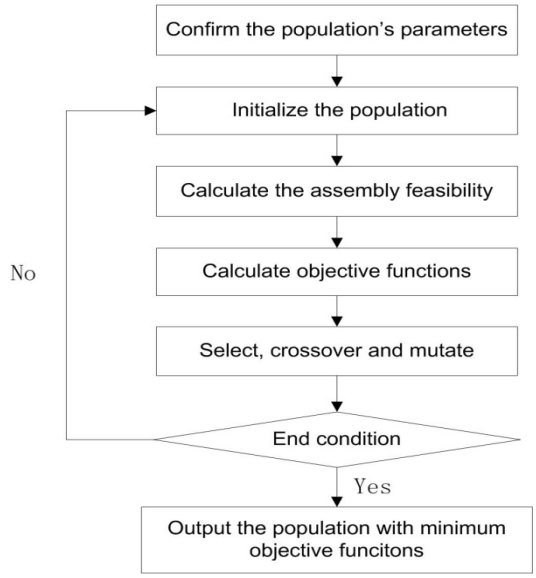

Fig.3.Flowchart of genetic algorithm processes

As Fig.3 shows, based on the improved crashed matrix and the practice of ASP with GA, the performing steps are:

Step 1: Select the size of start population (pop), crossover rate (p_c), genome mutation rate (p_m) and evolution algebra (m=1).

Step 2: Initialize the population as the father population.

Step 3: When the optimization algorithm cannot meet the end condition,

Judge the geometric feasibility of assembly sequence with the improved interference matrix model.

Calculate the objective function and figure out the minimum value and individual.

Use the proportionate selection method to create a next generational population and keep the optimized one with the elitist genetic algorithm.

Choose two individuals from the population and operate the two-point crossover with and mutate with.

Evolution algebra: m=m+1

Step 4: Output the result and obtain the optimized assembly sequence.

Case study

According to the complex ASP, this report use an aircraft cabin door as an example to evaluate the practice of improved interference matrix. The whole cabin door can be divided into 16 subassembly units, as Fig.4 shows. Motion simulation can be done with the software DELMIA, so we can get the interference matrix after clash check and input the result to the genetic algorithm.

Following the arithmetic above, implement the theory with MATLAB programming. Set pop size pop=100, m=300, crossover rate p_c=0.6 and mutating rate p_m=0.05. According to the engineering experience and experimental result, use ω_1=0.85, ω_2=0.15, $c_n = 6$. When objective function value gets 5.30, we can get the ASP result, that is, 1, 2, 3, 4, 5, 6, 7, 8, 9, 10, 11, 12, 13, 14, 15, and 16.

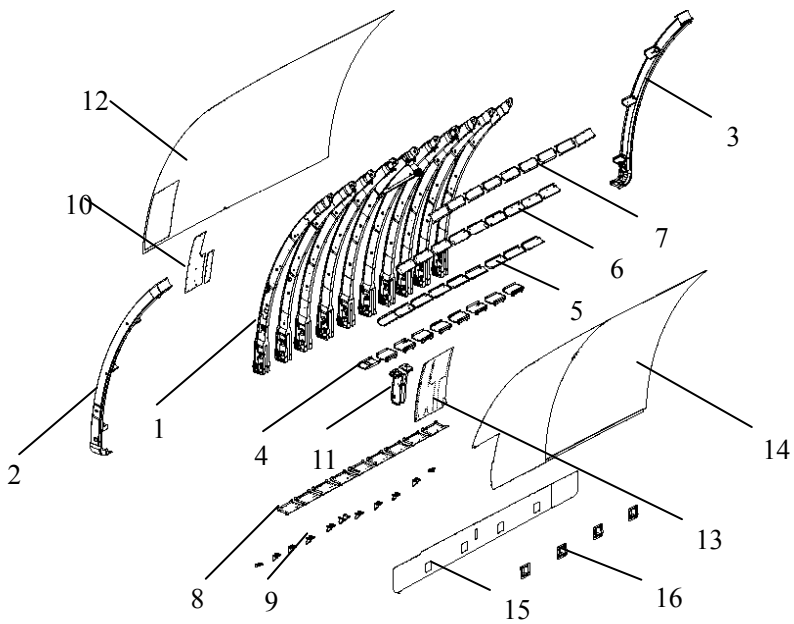

1-Frame component; 2-Left broadside; 3-Right broadside; 4-Beam1; 5-Beam2; 6-Beam3; 7-Upper side band; 8-Low side band; 9-Angle bar; 10-Switch out cover; 11-Switch out structure component; 12-Outer skin; 13-Switch out inside cover; 14-Inner skin; 15-Bottom inner skin; 16-Bottom inner skin angle

Fig.4.Diagram of the aircraft cabin door

Under the premise of assembly feasibility, the result is realistic. And we will get nothing with the traditional methods because of the limitation of feasible assembly directions in interference matrix.

Conclusion

Considering the features of the complex assembly like aircraft component in ASP, the improved interference matrix introduced by this paper provides a method to ensure the assembly feasibility on non-orthogonal directions. It is proved to be a reasonable solution to fix the problem of assembly directions for parts with high amount of curves and surfaces. Choosing three factors which have influences on the assembly time, the suitable genetic operators is designed to plan the assembly sequence through the GA. In the case study of the aircraft cabin door assembly, this paper uses the MATLAB to verify the ASP solution and gets the optimized result both in theoretical area and practical production.

References

[1] YANG Peng, LIU Ji-hong, GUAN Qiang. An Improved Genetic Algorithm for Assembly Sequence Optimization[J]. Computer Integrated Manufacturing Systems, 2002:467-471.

[2] Bonneville F, Perrard C, Henrioud JM.A genetic algorithm to generate and evaluate assembly plans[C]. Paris: Proceedings of IEEE Symposium on Emerging Technologies and Factory Automation, 1995:231-239.

[3] LIU Qiong, XU Ao, QIU Hao-bo, GAO Liang. Research on assembly cost evaluation for assembly sequence planning[J]. Machinery Design & Manufacture, 2007:165-167.

[4] DINI G, SANTOCHI M. Automated sequencing and subassembly detection in assembly planning[J]. CIRP Annals-Manufacturing Technology, 1992, 41(1):1-4.

[5] CHEN Tian-fan, TANG Wen-cheng. Assembly Sequence Planning Based on Clashes Matrix[J]. Machine Building & Automation, 2007, 36(1):39-41.

[6] PENG Tao, LI Shi-qi, WANG Jun-feng, FANG Jian-xin. Integrated Interference Matrix Based Ant Colony Algorithm for Assembly Sequence Planning[J]. Computer Science, 2010, 37(4):179-204.

[7] YU Jia-peng, WANG Cheng-en, ZHANG Wen-lei, YU Hong. Assembly Sequence Planning Based on Screening of Priority Rules[J]. Journal of Northeastern University, 2009, 30(11):1637-1640.

[8] ZHANG Gang, HOU Qiang, LI Hou-sheng, LAI Sheng-jing. Study on ASP Evaluating for Complex Structure Products[J]. Machinery Design & Manufacture, 2007, 1:132-134.

[9] ZHOU Kai-jun, LI Dong-bo, HUANG Xi. Assembly sequence planning based on genetic algorithm[J]. Journal of Machine Design, 2006, 23(2):30-32.

Computer-Aided Design, Manufacturing, Modeling and Simulation
10.4028/www.scientific.net/AMM.88-89

Assembly Sequence Planning for Aircraft Component Based on Improved Clashes Matrix
10.4028/www.scientific.net/AMM.88-89.22

DOI References

[2] Bonneville F, Perrard C, Henrioud JM. A genetic algorithm to generate and evaluate assembly plans[C]. Paris: Proceedings of IEEE Symposium on Emerging Technologies and Factory Automation, 1995: 231-239. doi:10.1109/ETFA.1995.496663
[4] DINI G, SANTOCHI M. Automated sequencing and subassembly detection in assembly planning[J]. CIRP Annals-Manufacturing Technology, 1992, 41(1): 1-4. doi:10.1016/S0007-8506(07)61140-8