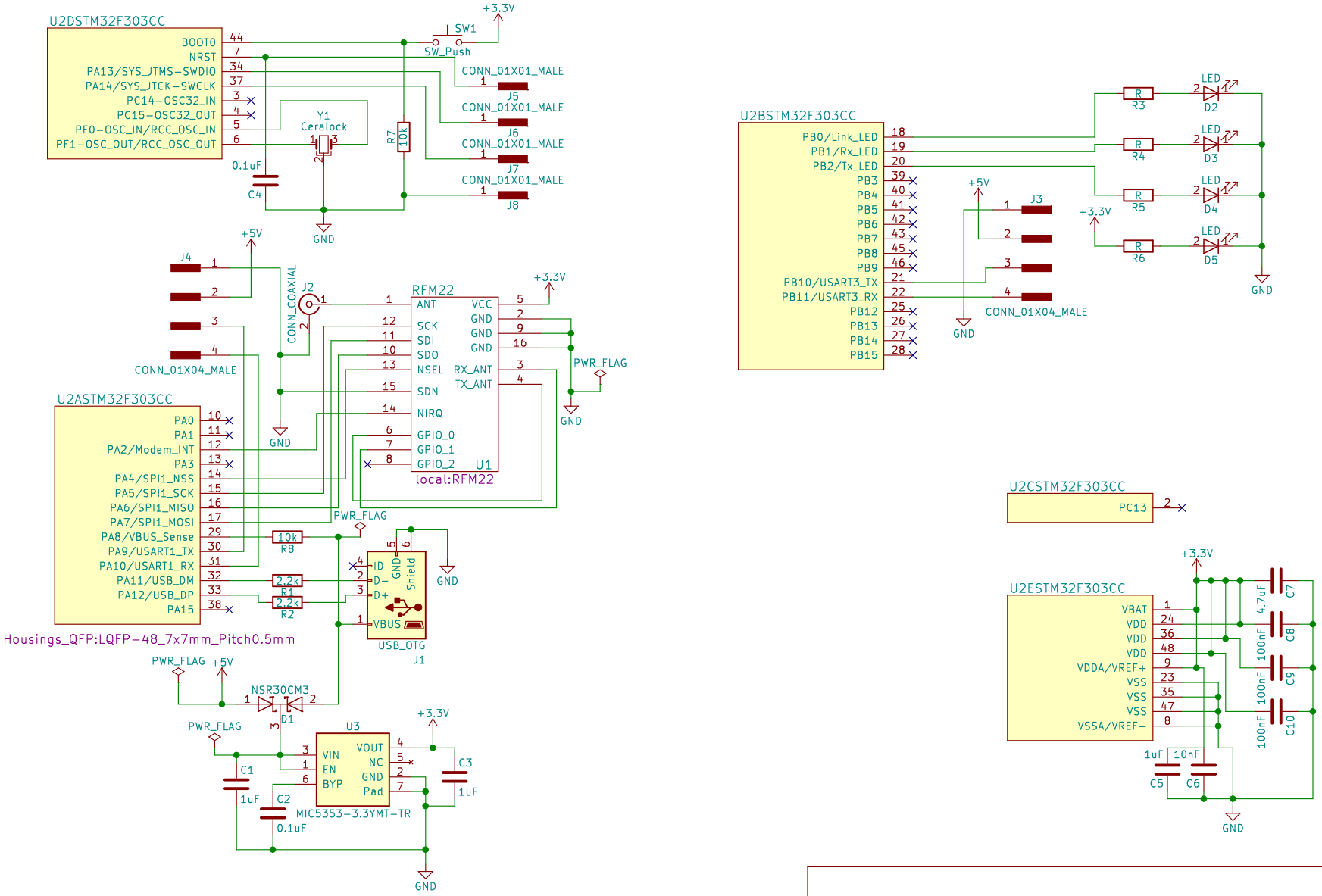

Copyright 2017 Brian Webb
Released under GNU General Public License V3.0

Sheet: /
File: LPLink_Nano.sch

Title: LPLink Nano

Size: USLetter	Date: 2017-08-20	Rev: 1.0
KiCad E.D.A. kicad 4.0.6		Id: 1/1