HIGHBROU™
ENGINEERING

Company Profile

Structural visions soar, Innovation at our core
From skyline to span, We engineer the plan

Presented By : Highbrou Engineering

ISO

HIGHBROU ENGINEERING PVT. LTD.

HIGHBROU™ ENGINEERING

Building the Future, Across Continents

Mission

To deliver innovative, sustainable, and buildable structural solutions that transform architectural visions into reality whilst maximising client value.

Vision

To be the most trusted structural engineering partner for complex projects globally, setting new standards in excellence.

2016

Founded in Mumbai with focus on high-rise and industrial structures

2024

Incorporated as Private Limited Company, expanding capabilities

2025

International expansion with Dubai office opening

Today: A multinational firm leveraging Indian engineering excellence with global delivery capabilities.

100+
Projects Delivered
Successfully completed across India

98%
Client Satisfaction
Consistently exceeding expectations

10+
Years of Innovation
Deep expertise and proven track record

ISO

HIGHBROU™ ENGINEERING

Solving Your Biggest Structural Challenges

Cost Overruns

Solution: Value Engineering & Optimized Designs
Benefit: 10-20% savings on material costs

Project Delays

Solution: BIM-Driven GFC Drawings
Benefit: ~50% faster installation, zero RFIs

Design Compromises

Solution: Architect-Friendly Structural Systems
Benefit: Design intent protected, code-compliant

Execution Risks

Solution: Peer Review & Precision Detailing
Benefit: De-risked construction, on-time delivery

Global Standards

Solution: Multinational Expertise (India & Middle East)
Benefit: International best practices, seamless execution

HIGHBROU™ ENGINEERING

We Listen. We Innovate. We Deliver.

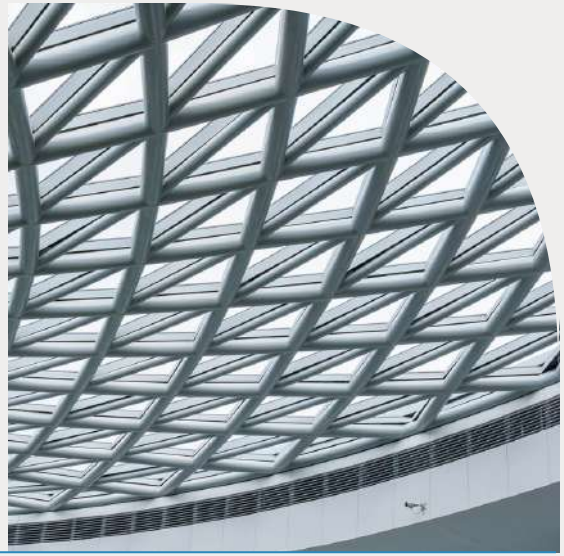

DISCOVER

Initial analysis, gathering requirements, and understanding project scope.

INNOVATE

Developing creative, efficient, and context-specific structural solutions.

VALIDATE

Rigorously verifying designs through peer review and technical optimization.

DELIVER

Providing precise construction drawings and comprehensive implementation plans.

SUPPORT

On-site guidance and real-time problem-solving during construction.

"Highbrou's innovative approach saved us 20% in steel costs and 2 months on schedule. Their designs turned constraints into opportunities."

- Director, Gurkrupa developers (The Marque, Bandra West)

ISO

HIGHBROU™ ENGINEERING

End–to–End Structural Solutions

STRUCTURAL DESIGN & DETAILING

From concept to GFC drawings, BBS, BOM, and fabrication packages with precision and compliance

VALUE ENGINEERING

Cost optimisation without compromising safety or quality, delivering maximum value to clients

PEER REVIEW & CONSTRUCTABILITY AUDIT

Independent validation to de-risk designs and ensure buildability from day one

INTERNATIONAL PROJECTS

Specialised expertise in Indian, Middle Eastern, and Saudi building codes and standards

SPECIALTY STRUCTURES

Stadiums, long-span roofs, industrial facilities, and heritage structures requiring unique solutions

ISO

HIGHBROU™ ENGINEERING

Leading the Way: Highbrou Engineering's Visionary Leadership

Discover the visionary leaders propelling Highbrou Engineering's dedication to structural innovation and excellence.

SAYYAD WAJED ALI

MANAGING DIRECTOR

- A Civil Engineer with over 10 years of transformative experience across high-rise, infrastructure, and industrial projects.
- Masterfully delivers innovative structural solutions, tackling even the most complex challenges, including iconic stadiums.
- Pioneers advanced structural designs, consistently driving top-tier performance and engineering excellence.

SARFARAZ SHAIKH

ASSOCIATE DIRECTOR

- A Mechanical Engineer boasting over 20 years of profound expertise in the MEP industry, contributing to 600+ successful projects.
- Strategically spearheads branding, expansion, and growth initiatives to maximize market impact.
- Instrumental in elevating Highbrou Engineering, positioning the firm for unprecedented success.

SHAIKH ISMAIL

DIRECTOR

- A seasoned finance expert with extensive experience in project development and financial strategy.
- Crucially guides the company's strategic expansion and ensures robust financial health.

MOHAMMED KASHIF

DIRECTOR

- A dynamic business graduate specializing in navigating complex real estate markets.
- Optimizes project feasibility and develops cutting-edge strategies to maximize development potential.

ISO

HIGHBROU™ ENGINEERING

Our Engineering Team: A Powerhouse of Talent

Leveraging decades of collective experience, our team is expertly led and managed by distinguished engineering veterans.

Our fully remote, agile team ensures focused, efficient operations, consistently delivering precise and high-quality results.

Comprised of senior engineers, holding degrees from elite global universities, specializing in tall buildings, industrial, and infrastructure projects.

HIGHBROU™ ENGINEERING

Engineering the Impossible, Delivering the Exceptional

THE MARQUE, BANDRA WEST

- 120m High-Rise
- 20% Steel Saved
- 2 Months Reclaimed

GURUKRUPA RIDHI SIDHI, ANDHERI

- 41-Story Tower
- Floating Columns
- 100K FSI Freed

MAURYA, VERSOVA

- Beamless Luxury Flats
- Mechanical Parking
- Architect's Vision Intact

MASJID SADAT, AURANGABAD

- Column-Free Prayer Hall
- 127ft Minarets
- Modular Dome Design

SKYLIGHT ROOF, RIYADH

- 28.5m × 48m Glass Roof
- Prestressed Bowstring Trusses
- Minimal Deflection

ISO

HIGHBROU™ ENGINEERING

ISO

Now Serving: India & the Middle East

MUMBAI OFFICE

- Deep understanding of local codes (IS, NBC)
- Strong vendor and contractor network
- Expertise in high-rise, residential, and industrial projects
- Established client relationships across Western India

DUBAI OFFICE (2025)

- Access to Middle East and GCC markets
- Familiarity with Dubai Municipality regulations
- Experience in long-span, luxury, and iconic structures
- Gateway to Saudi Arabia and UAE mega projects

Strategic Advantage: Our dual presence allows us to leverage costeffective Indian engineering talent whilst maintaining proximity to Middle Eastern markets and standards.

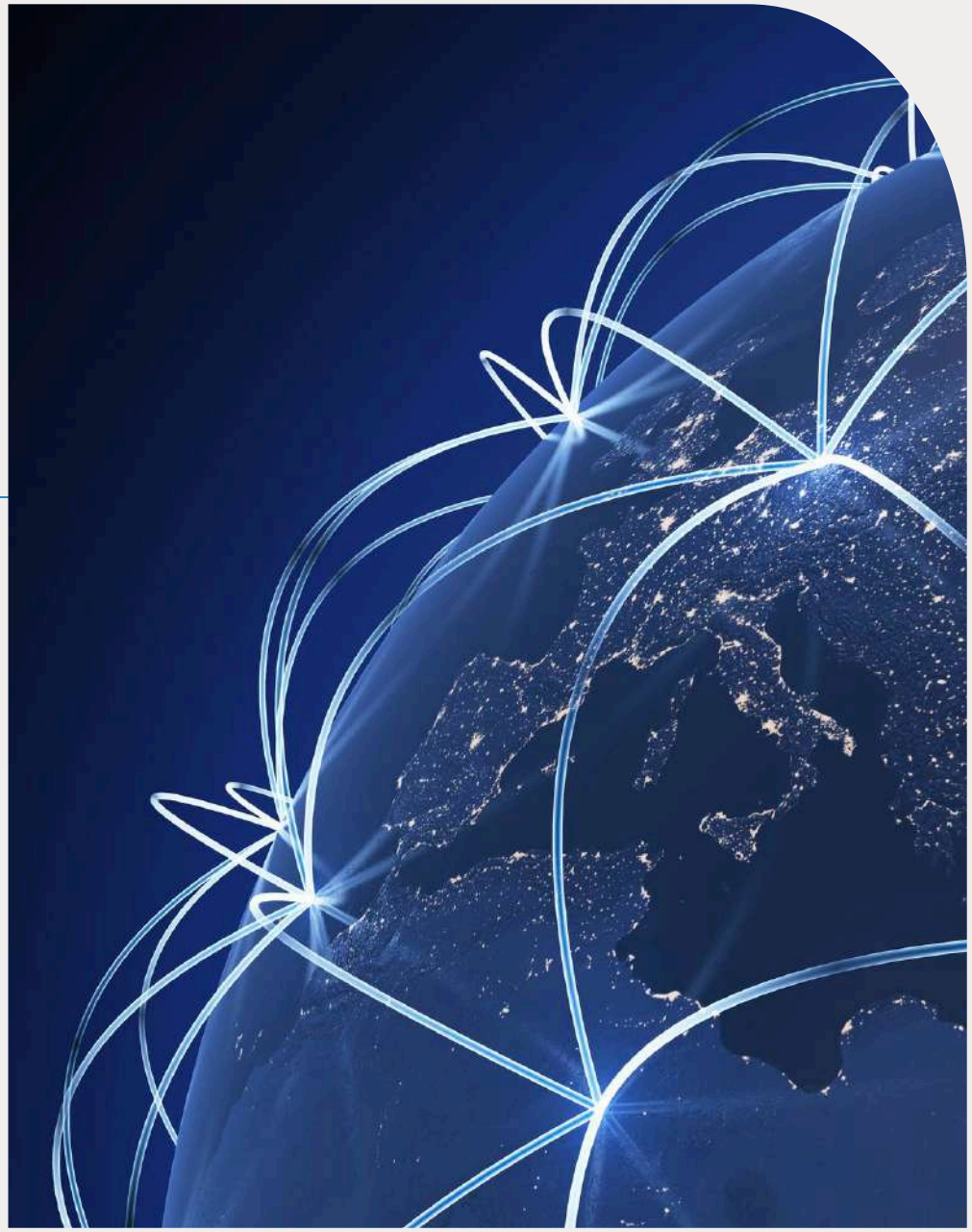

HIGHBROU™ ENGINEERING

OUR PORTFOLIO

HIGHBROU™ ENGINEERING

ISO

The Marque

Bandra West

Floor count, height & construction area:

3 Basements + Ground + 6 Podiums + 1 Amenity + 24 Floors + Terrace, 120m high, 430,200 SqFt construction area

Architect:

Ingenious Architects, Mumbai

Client:

Gurukrupa Realcon

Status:

On going

Key Benefit:

Developer saved lakhs and reclaimed 2 months on schedule.

Contractor built faster with zero RFIs on beams.

Architect saw full design intent honoured.

Challenge:

Reclamation-land strata under a 9 m-deep basement.

Original consultant's pile-raft design risked skyrocketing cost and delay.

Coupling beams so congested on 75 locations that site execution ground to a halt.

Our Breakthroughs:

Single Uniform Raft: Joint analysis with Geocon springs. Eliminated all piles—simpler excavation, 5–7% substructure cost cut.

Framed-Tube Around Cores: Widened lever-arm to cut overturning moment by 20%, enabling thinner slab and slimmer columns.

Composite Coupling Beams (~75 Nos.): Replaced 527 kg of diagonal rebar per beam with a 62 kg encased I-section—88% less congestion, 65% faster install, 34% cost cut.

Material Savings: 3,917 t → 3,134 t steel (20%↓); 20,645 m^3 → 19,613 m^3 concrete (5%↓).

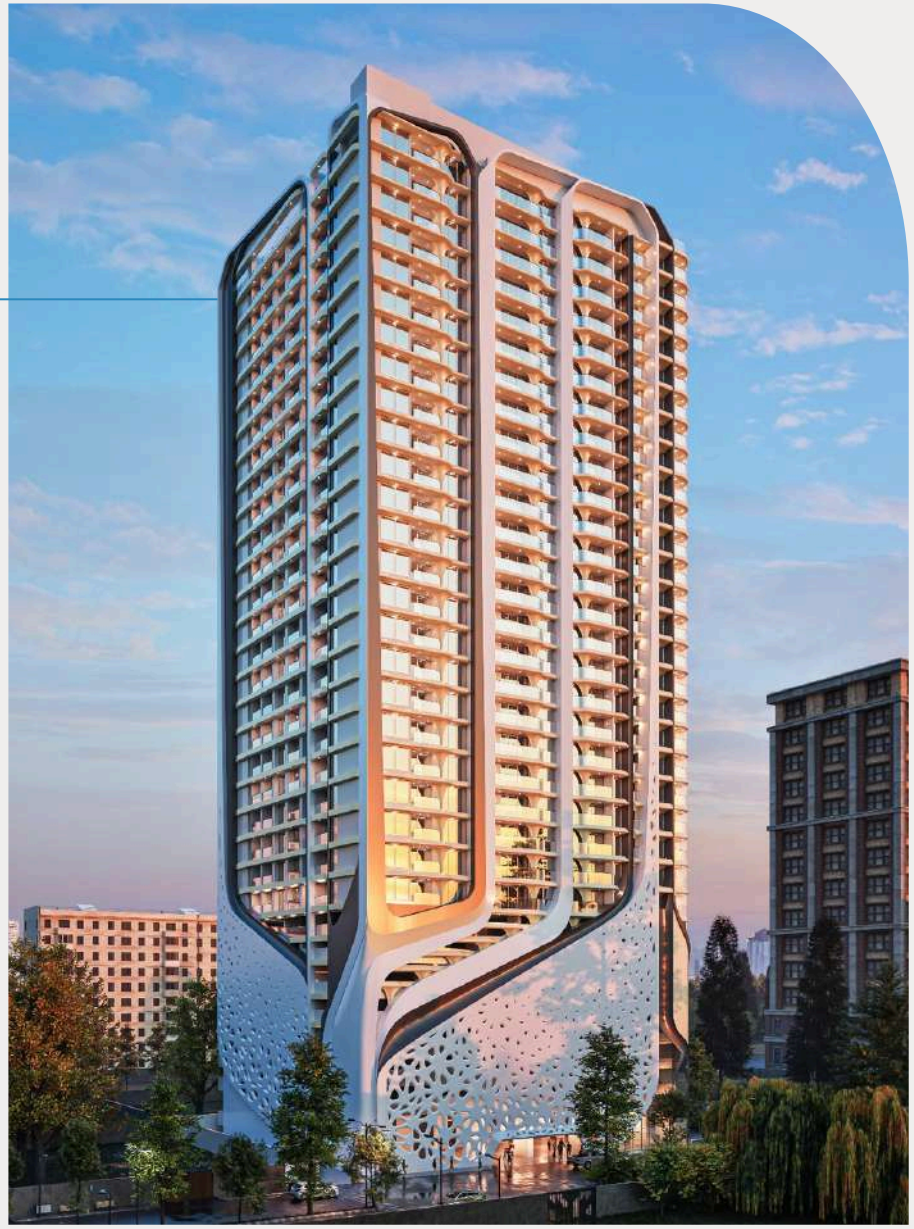

HIGHBROU™ ENGINEERING

ISO

The Marque

Bandra West – Testimony Certificate

GURUKRUPA REALCON INFRABUILD LLP

C-106, Vashi Plaza, Sector-17, Vashi, Navi Mumbai - 400 703. | Email: gurukruparealcon@gmail.com
www.gurukrupagroup.in

Certificate of Performance

This is to certify that **Highbrou Engineering Private Limited** ***was appointed as the Structural Consultant for our premium residential project*** **"The Marque"** ***at Bandra West.***

Highbrou Engineering demonstrated exceptional command over structural optimization and material efficiency. Their design approach resulted in:

- **Over 20% reduction in reinforcement steel consumption**
- **Approximately 5% saving in overall concrete usage**

These optimizations translated into a more economical structural system, adding significant value to the project. Their coordinated and execution-friendly deliverables helped streamline on-site activities, improve planning accuracy, and minimize rework during construction.

We acknowledge their contribution in enhancing the efficiency and profitability of the project and **recommend Highbrou Engineering for their expertise in value-driven structural engineering.**

Mahesh Lira Verat
Digitally signed by Mahesh LiraVerat
Date: 2025.06.17 12:19:53 +05'30'

Authorized Signatory
For Gurukrupa Developers

HIGHBROU™ ENGINEERING

ISO

Gurukrupa – Ridhi Sidhi,
Andheri (W)

Floor count, height & construction area:

3 Basements (parking) + Ground & Podium 1 (retail) + Podiums 2–7 (offices & parking) + Podium 8 (amenities) + Floors 1–28 (16 luxury apartments each) + Terrace amenities, 120m Height, 10.5 Lakh SqFt construction area

Architect:

Ingenious Architects, Mumbai

Type:

41-storey mixed-use tower

Client:

Gurukrupa Realcon

Status:

On going

Outcome:

Architect celebrated zero-compromise vision.

Contractor moved from confusion to confidence.

Challenge:

Podium levels demanded column-free spans for retail/offices; residential floors above required a regular grid → floating columns.

IS 1893-1 & IS 16700 ban floating columns in the primary lateral system.

Our Innovations:

Framed-Tube + Core Shear Walls: Defined a ductile lateral frame in red (GA), isolating floating columns as gravity-only.

BIM-Driven Validation: 3D load paths proved full compliance without touching architect's plan.

Material & Margin:

Saved ~18% steel on tube elements; freed 100% FSI for developer's bottom line.

HIGHBROU™ ENGINEERING

ISO

Maurya,
Versova

Floor count, height & construction area:

5 basements (mechanical parking) + Ground (commercial & amenities) + 13 residential floors + Terrace amenities,
120,000 sq ft construction area

Architect:

Ingenious Architects,
Mumbai

Client:

Gurukrupa Realcon

Status:

On going

Challenge:

5 mechanical-parking basements needed large-span, column-free zones.

13 residential floors of ~5,000 sq ft plates needed total interior flexibility (Jodi-flat sales).

Our Innovations:

Flat Slab Everywhere: No drop beams—ceiling-flat, buyer-friendly.

Perimeter Moment Frame: Continuous around the façade, taking all lateral loads.

Corner Shear Walls: From foundation to terrace—floating columns outside the lateral system.

Outcome:

Developer gained a powerful sales USP: “Beamless luxury ceilings you can reconfigure.”

Parking Vendor executed mechanical parking effortlessly.

HIGHBROU™ ENGINEERING

ISO

Jai Gujarat,

Santacruz

Floor count, height & construction area:

12-storey mixed-use building + 3 basements parking, 55,000 sq ft construction area

Architect:

Mayfair Housing Pvt. Ltd.

Client:

Mayfair Housing Pvt. Ltd.

Status:

On going

Challenge:

4th Floor Projection: A 3.8 m cantilever extension above the 3rd floor to create an additional bedroom footprint.

Column Obstruction: Supporting column falls within the basement driveway, blocking vehicle access.

Slender Column Issue: Continuous 13 m unsupported height from GF to underside of 4th floor demanded a very large column section.

Architectural Impact: Tie-beam approach introduces visible beams that spoil façade aesthetics and conflict with the architect's design vision.

Our Innovations:

A. Braced Cantilever System

Cantilever Slab Design: Extended 3.8 m from the dead wall at 4th floor, eliminating the need for an external column at ground level.

RCC Cross Tie Brace: From the tip of the 4th-floor cantilever to the start of a mirrored cantilever at the 5th floor, a reinforced concrete brace transfers bending moments axially.

Load Path Optimization: Brace element conveys cantilever reaction forces directly into the slab and wall, bypassing the basement obstruction

B. Façade & Functional Integrity

Uninterrupted Driveway: No column in parking clears vehicle movement without layout compromise.

Architectural Freedom: Clean exterior lines maintained; full 3.8 m projection achieved without visible beam on façade.

Layout Preservation: Residential bedroom space remains as intended by the architect.

Outcome:

Developer kept valuable parking slots.

Architect retained dream façade.

Contractor got swift basement pours with no obstruction.

HIGHBROU™ ENGINEERING

ISO

Chandra Logassa

Andheri (W)

Floor count, height & construction area:

1 Basement (Parking + UGT, fire tank, pump room) + Ground Floor (Shops + Parking) + 21 Residential Floors + Terrace with Amenities
117,000 sq ft construction area

Architect:

Nakhwa Architects, Mumbai

Client:

Amaan Gold Leaf

Outcome:

Achieved strong lateral stability despite narrow building geometry

Maintained the architect's original floor plan and external design without structural interference

Simplified the construction process using a clear and logical column layout

Avoided overdesign, ensuring an economical and efficient use of materials

Challenge:

A narrow floor plate made the building inherently flexible along its length, leaving it vulnerable to seismic and wind forces. Traditional shear wall placement or core systems were unfeasible due to architectural and spatial constraints.

Our Innovations:

Designed rigid moment frames along the building's shorter width to resist lateral forces effectively

Strategically placed frames to maximize stiffness without affecting spatial layouts

Ensured a continuous and direct load transfer from terrace to foundation, eliminating structural inconsistencies

Applied ductile detailing techniques for better earthquake resistance, fully aligned with Indian seismic design codes

Status:

On going

HIGHBROU™ ENGINEERING

DHANANJAY HEIGHTS

NALASOPARA (W)

Floor count, height & construction area:

Ground + 22 floors, 68m high, ~15000 SqM construction area

Location:

Nalasopara West, Palghar (MS), India

Architect:

Shree consultants, Mumbai

Client:

Realtech Infra

Challenge:

Asymmetrical Architectural layouts made it difficult to create a balanced structural frame, causing torsional instability under seismic loads.

Our Innovative Solution:

Designed coupled shear walls to balance the building's weight and stiffness

Ensured even distribution of forces to keep the structure stable during earthquakes.

Key Benefit:

Provided a solution that ensured the building was safe, stable, and compliant, even with its unique layout challenges

HIGHBROU™ ENGINEERING

ISO

ROOHI SOLITAIRE

VILLE PARLE

Floor count, height & construction area:

6 Basements + Ground + 16 floors, 50m high, ~1140 SqM construction area

Location:

Vile Parle East, Mumbai (MS), India

Architect:

XAR Workshop LLP, Mumbai

Client:

RG Corporation, Mumbai

Challenge:

Asymmetrical Architectural layouts made it difficult to create a balanced structural frame, causing torsional instability under seismic loads.

Our Innovative Solution:

Designed coupled shear walls to balance the building's weight and stiffness

Ensured even distribution of forces to keep the structure stable during earthquakes.

Key Benefit:

Provided a solution that ensured the building was safe, stable, and compliant, even with its unique layout challenges

HIGHBROU™ ENGINEERING

ISO

THE SKY HEAVEN

ANDHERI (W)

Floor count, height & construction area:

23 floors, 70m high, ~6500 SqM construction area

Location:

Andheri West, Mumbai (MS), India

Architect:

DA Design, Mumbai

Client:

DA Realty, Mumbai

Challenge:

Architect required large column-free spaces at lower levels, while upper floors needed more columns for residential layouts.

Our Innovative Solution:

Implemented a core-supported structural system.

Utilized lift shaft core as rigid shear walls to handle all lateral loads.

"Floated" columns from an intermediate floor, ensuring they only sustained gravity loads.

Key Benefit:

Provided a solution that ensured the building was safe, stable, and compliant, even with its unique layout challenges

Result:

Delivered a code-compliant and structurally sound design, solving architectural challenges with innovation.

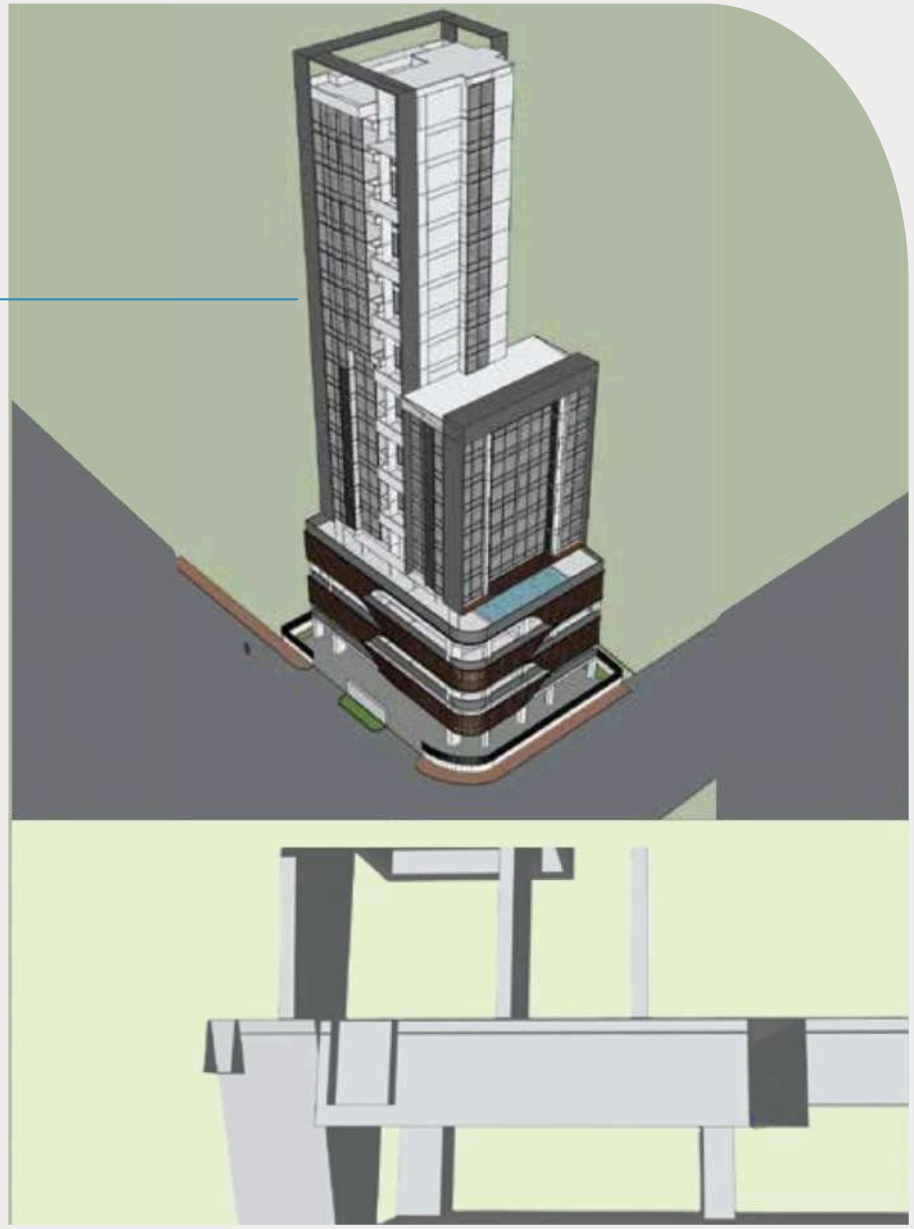

HIGHBROU™ ENGINEERING

ISO

AVENUE 210

NALASOPARA

Floor count, height & construction area:

Ground + 19 floors, 55.8m high, ~10855 SqM construction area

Location:

Nalasopara, Palghar (MS), India

Client:

Vinay Unique

Challenge:

Asymmetrical Architectural layouts made it difficult to create a balanced structural frame, causing torsional instability under seismic loads.

Our Innovative Solution:

Designed coupled shear walls to balance the building's weight and stiffness.

Ensured even distribution of forces to keep the structure stable during earthquakes.

Key Benefit:

Provided a solution that ensured the building was safe, stable, and compliant, even with its unique layout challenges

HIGHBROU™ ENGINEERING

ISO

SUYASH
VERSOVA

Floor count, height & construction area:

23 floors, 70m high, ~6500 SqM construction area

Location:

Andheri West, Mumbai (MS), India

Architect:

DA Design, Mumbai

Client:

DA Realty, Mumbai

Challenge:

Architect required large column-free spaces at lower levels, while upper floors needed more columns for residential layouts.

Architect required clean, simple, and flat elegance inside residential units, avoiding visible beams and offsets.

Our Innovative Solution:

Implemented a core-supported structural system.

Utilized lift shaft core as rigid shear walls to handle all lateral loads.

"Floated" columns from an intermediate floor, ensuring they only sustained gravity loads.

Implemented a flat slab structural system with periphery beams only.

Used sleeker, longer shear walls to align with masonry walls, creating a smooth, flush interior.

Key Benefit:

Achieved column-free spaces below without compromising stability or violating IS 1893 standards.

Simplified design for interior designers with fewer wall offsets and no hanging beams.

Cost savings on concealing column offsets and exposed beams.

Enhanced aesthetic appeal with a modern, flat appearance inside residential units.

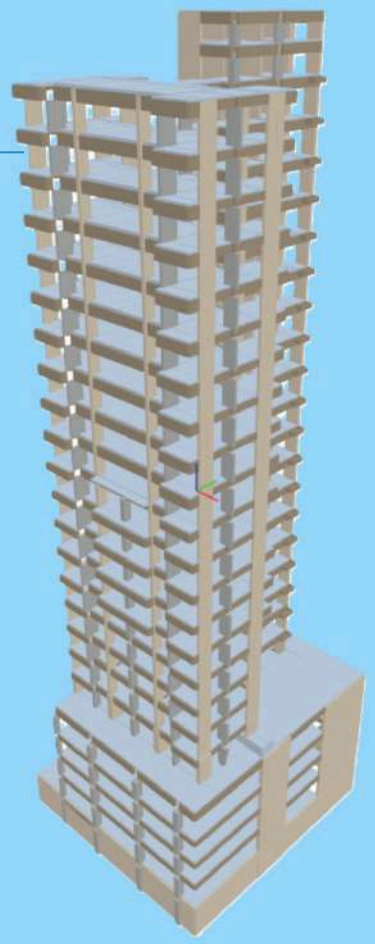

HIGHBROU™ ENGINEERING

ISO

LAXMI TOWER

VIRAR (E)

Floor count, height & construction area:

Ground + 15 floors, 46m high, ~18000 SqM construction area

Location:

Nalasopara, Palghar (MS), India

Architect:

Studio Arch

Client:

Chetana Builders & Developers

Challenge:

Asymmetrical Architectural layouts made it difficult to create a balanced structural frame, causing torsional instability under seismic loads.

Our Innovative Solution:

Designed coupled shear walls to balance the building's weight and stiffness.

Ensured even distribution of forces to keep the structure stable during earthquakes.

Key Benefit:

Provided a solution that ensured the building was safe, stable, and compliant, even with its unique layout challenges

HIGHBROU™ ENGINEERING

ISO

SHIVANSH HEIGHTS

VIRAR (E)

Floor count, height & construction area:

Ground +19 floors, 60.75m high, ~7170 SqM construction area

Location:

Virar East, India

Architect:

Ar. Ajay Wade, Mumbai

Client:

Shivansh group, Virar

Challenge:

Asymmetrical Architectural layouts made it difficult to create a balanced structural frame, causing torsional instability under seismic loads.

Our Innovative Solution:

Designed coupled shear walls to balance the building's weight and stiffness.

Ensured even distribution of forces to keep the structure stable during earthquakes.

Key Benefit:

Provided a solution that ensured the building was safe, stable, and compliant, even with its unique layout challenges

HIGHBROU™ ENGINEERING

ISO

MASJID SADAT

AURANGABAD

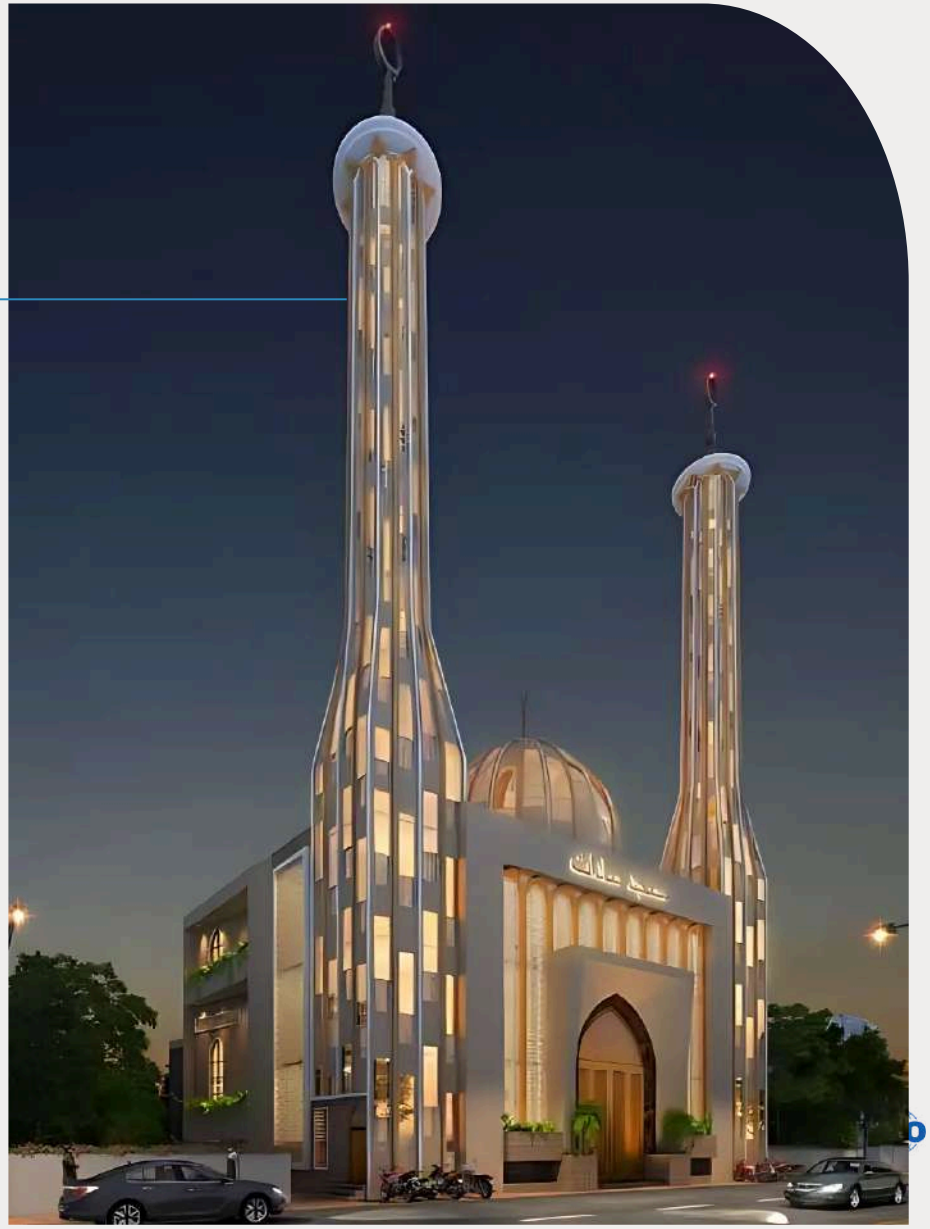

Construction area:

2400 SqM

Location:

Aurangabad (MS), India

Structural challenge and how we solved it:

45’ × 75’ column free prayer hall: We adopted PT floor system to achieve column free space for the prayer hall

127’ tall twin minarets

vFlexibility in future provision: The client sought twin 127' tall minarets and a 40' diameter dome in the current construction phase, allowing for future expansion to three floors. To address the challenge of constructing these elements, we proposed a modular structural steel framing approach with bolted connections for easy disassembly and lifting over future floors.

HIGHBROU™ ENGINEERING

ISO

EWAN SEDRA – 3

RIYADH, SAUDI ARABIA

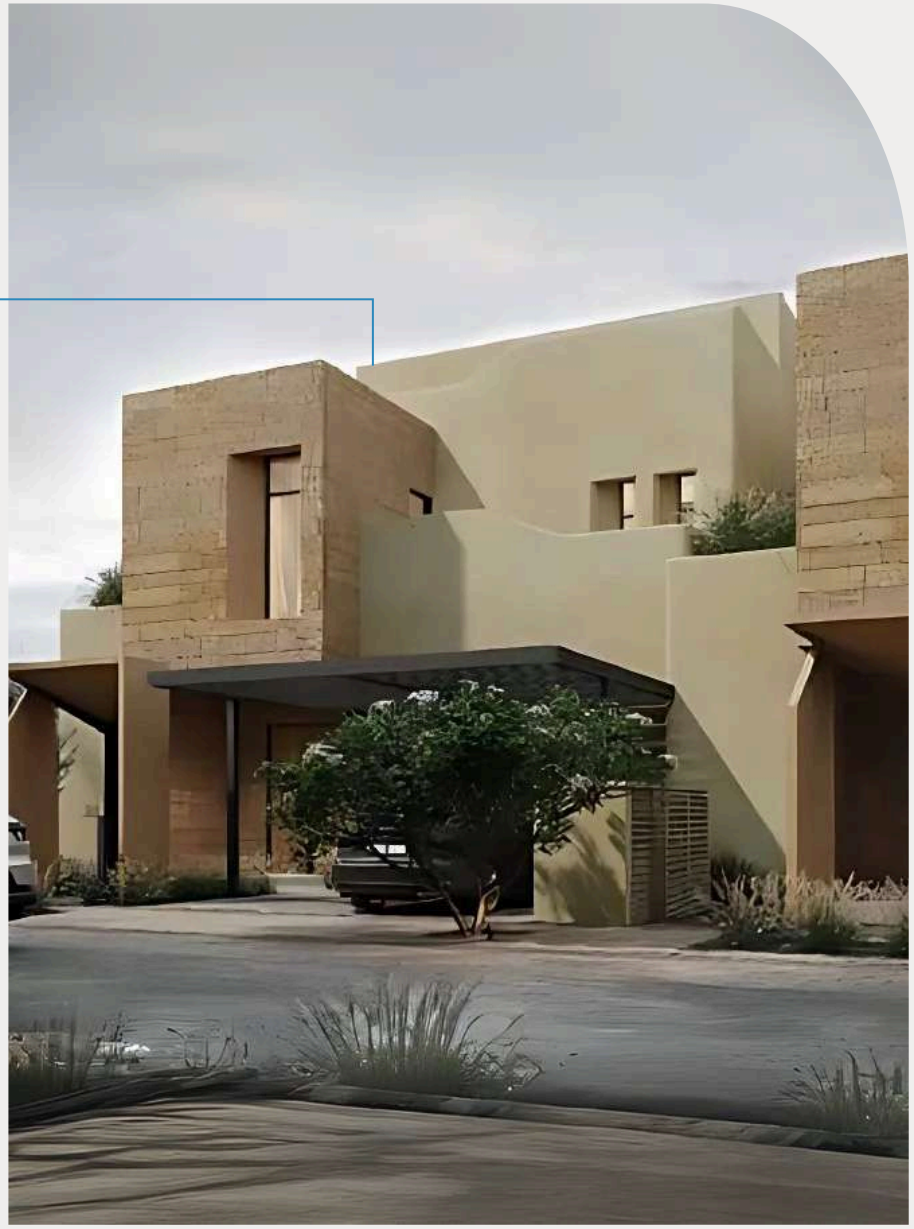

Location:

Riyadh, Saudi Arabia

Structural challenge and how we solved it:

Luxurious bungalows with long span spaces with different layout configuration at different floors.

We provided floating columns and long span RCC girders to meet the Architectural requirements.

HIGHBROU™ ENGINEERING

ISO

PEE-KAA-BOO HOUSE

KARJAT

Construction area:

3500 SqFt

Location:

Karjat, Maharashtra

Structural challenge and how we solved it:

Ground lvls at 3 different lvls

Clear glass / window façade restricting use of structural braces for lateral stability. MRF were used to stable the frame laterally

Glass cladded connecting bridge: Simply supported steel deck

HIGHBROU™ ENGINEERING

ISO

SKYLIGHT ROOF OVER COURTYARD

RIYADH, SAUDI ARABIA

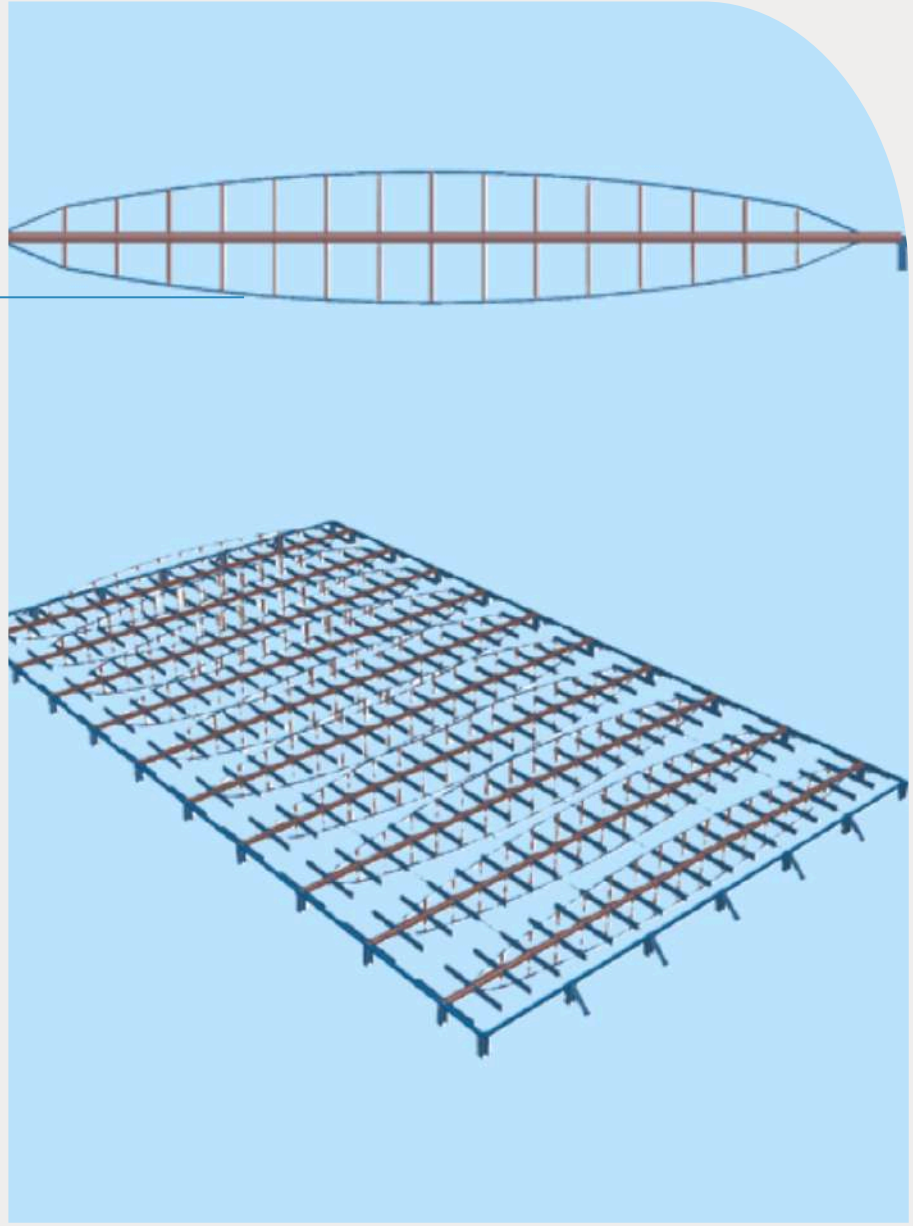

Construction area:

1368 SqM

Structural challenge and how we solved it:

28.5m × 48.00m glass roof: Being a glass roof, minimal deflection has to be maintained to avoid cracks in the glass panels. To support the glass panels, we therefore offered pre-stressed steel bowstring trusses, and we reduced deflection by prestressing the high-tensile cables at the top and bottom.

Location:

Al-Imam Muhammed Ibn Saud Islamic University Riyadh Campus, Saudi Arabia

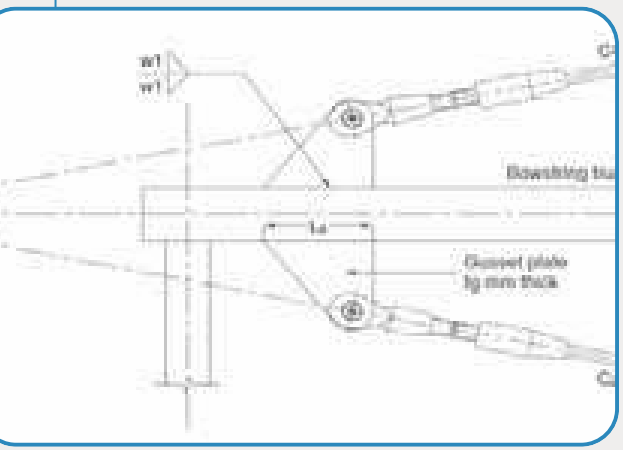

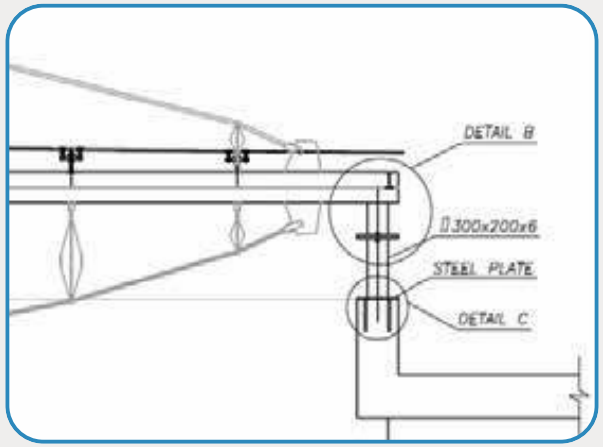

HIGHBROU™ ENGINEERING

ISO

NIONO PAPER MILL

MORBI GJ

Construction area:

5500 SqM

Structural challenge and how we solved it:

Seismic zone 4 EQ loads

Long span leab-to roofs

Location:

Morbi, Gujrat.

PEB vendor:

Devashish infra, Gujarat

HIGHBROU™ ENGINEERING

ISO

TGIF FILM STUDIO

MADH, MUMBAI

Construction area:
1800 SqM

36m × 46m column free space for film studio:
Built in conventional truss roofing system

Location:
Madh, Mumba

PEB vendor:
TGIF Film studio Pvt Ltd

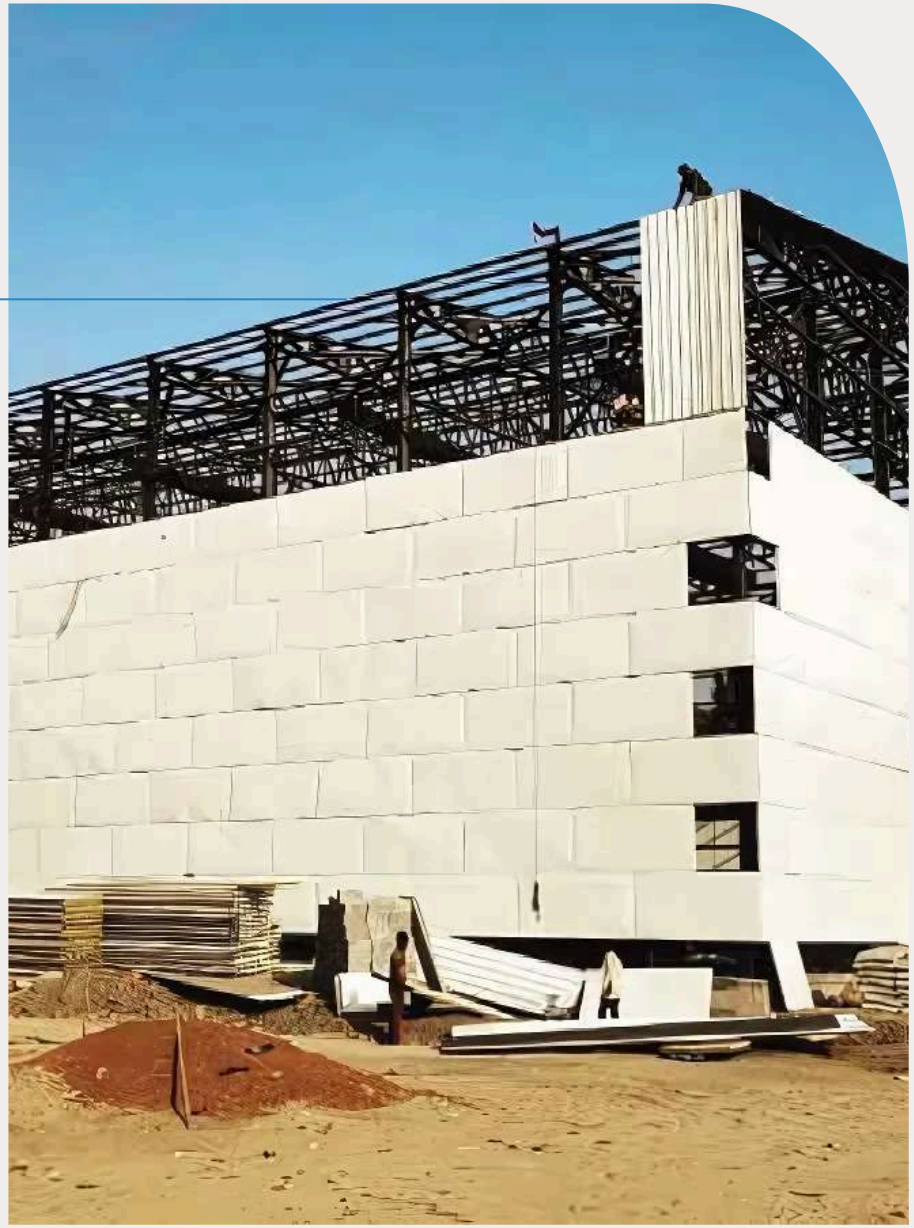

HIGHBROU™ ENGINEERING

ETP PLANT

BOKARO

Project:

Recycling of waste water from plant outfalls 1 & 2A for reducing water consumption and achieving zero discharge.

Location:

Bokaro, Jharkhand

Client:

SAIL

INNOVATING BEYOND ENGINEERING

HIGHBROU™ ENGINEERING

ISO

Let's Build Together

+91 957 930 7313

info@highbrou.com

www.highbrou.com

Head office:

204, Damji Shamji Udyog Bhavan,
Andheri West, Mumbai 400047

Registered. office:

8-8-252, New Rashidpura N10,
CIDCO, Aurangabad 431003

HIGHBROU™ ENGINEERING

Our Engineering Approach

PRE-DESIGN PHASE / CONCEPTUALIZATION

Develop list of required data and limitations

Develop appropriate structural concept alternatives

Prepare Design Basis Report and Concept drawing for approval

SCHEMATIC DESIGN PHASE

Establish member sizes

Prepare Design Features Report and Municipal Drawings

Analyze value engineering proposals and integrate into drawings and specifications

TENDER PHASE

Submit technical specifications and BOQ

Prepare final BOQ and technical specifications

Assist in pre-qualification and attend meetings as requested

DESIGN DEVELOPMENT PHASE

Prepare structural analysis models and sizing of members

Prepare framing plans and calculations of typical details and sections

Peer review of Structural Design and Drawings

FINAL DESIGN PHASE

Complete detailed design and working drawings for structural works

Submit complete structural designs for approval

CONSTRUCTION ADMINISTRATION PHASE

Respond to design queries and attend site meetings

Check and approve temporary works, shop drawings, and materials

Review and approve materials

Prepare lists of defects for all trades

PROJECT HANDOVER

Issue structural stability certificate

ISO