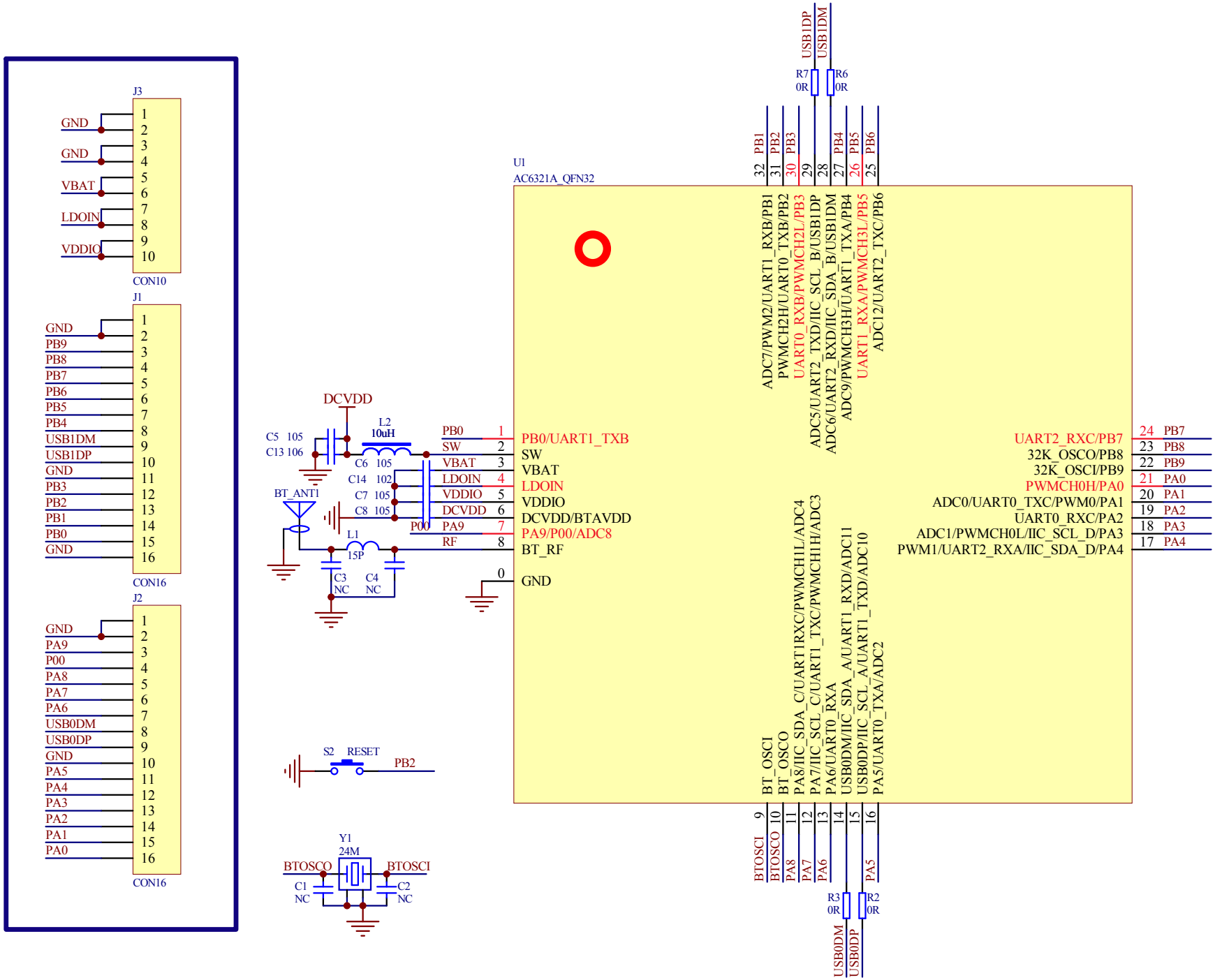
J3
GND
GND
VBAT
LDOIN
VDDIO
CON10
J1
GND
PB9
PB8
PB7
PB6
PB5
PB4
USB1DM
USB1DP
GND
PB3
PB2
PB1
PB0
GND
CON16
J2
GND
PA9
P00
PA8
PA7
PA6
USB0DM
USB0DP
GND
PA5
PA4
PA3
PA2
PA1
PA0
CON16
DCVDD
C5 105
C13 106
L2
10uH
C6 105
C14 102
C7 105
C8 105
BT_ANT1
L1
15P
C3
NC
C4
NC
S2
RESET
PB2
Y1
24M
BTOSCO
BTOSCI
C1
NC
C2
NC
U1
AC6321A_QFN32
PB0/UART1_TXB
SW
VBAT
LDOIN
VDDIO
DCVDD/BTAVDD
PA9/P00/ADC8
BT_RF
GND
ADC7/PWM2/UART1_RXB/PB1
PWMCH2H/UART0_TXB/PB2
UART0_RXB/PWMCH2L/PB3
ADC5/UART2_TXD/IIC_SCL_B/USB1DP
ADC6/UART2_RXD/IIC_SDA_B/USB1DM
ADC9/PWMCH3H/UART1_TXA/PB4
UART1_RXA/PWMCH3L/PB5
ADC12/UART2_TXC/PB6
UART2_RXC/PB7
32K_OSCO/PB8
32K_OSCI/PB9
PWMCH0H/PA0
ADC0/UART0_TXC/PWM0/PA1
UART0_RXC/PA2
ADC1/PWMCH0L/IIC_SCL_D/PA3
PWM1/UART2_RXA/IIC_SDA_D/PA4
BT_OSCI
BT_OSCO
PA8/IIC_SDA_C/UART1RXC/PWMCH1L/ADC4
PA7/IIC_SCL_C/UART1_TXC/PWMCH1H/ADC3
PA6/UART0_RXA
USB0DM/IIC_SDA_A/UART1_RXD/ADC11
USB0DP/IIC_SCL_A/UART1_TXD/ADC10
PA5/UART0_TXA/ADC2
USB1DP
USB1DM
R7
0R
R6
0R
R3
0R
R2
0R
USB0DM
USB0DP