KAMAMI

KA-NUCLEO-F411CE

KAMAMI

Rev. 20190119175707
Źródło: http://wiki.kamami.labs.com/index.php/KA-NUCLEO-F411CE

Spis treści

Basic features and parameters 1
Standard equipment 2
Electrical schematics 3
Microcontroller STM32F411CEU6 4
Power supply 5
USB communication 6
User LED and RGB LED 8
USB Host connector 9
User push-button 10
Multimedia 11
External links 12

Description

KA-NUCLEO-F411CE is a development board equipped with standard Arduino UNO connectors. Board is based on microcontroller STM32F411CE. The embedded programmer (compatible with ST-Link/V2-1) makes possible programming and debugging of microcontroller via USB connector.

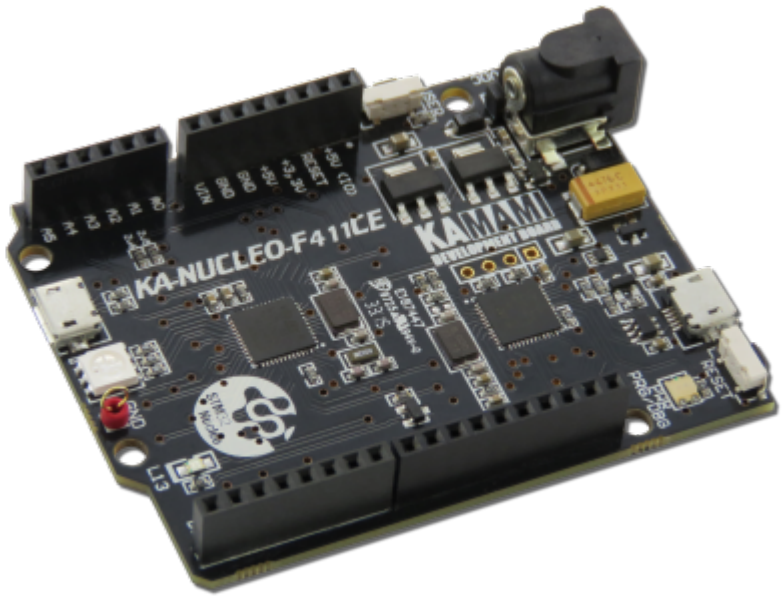

Basic features and parameters

- Microcontroller STM32F411CE (ARM Cortex-M4, 512kB Flash memory)
- Embedded programmer / debugger compatible with ST-Link/V2-1
- Connectors compatible with Arduino standard
- MicroUSB connector for power supply input and programming
- Possibility of power via DC connector (5.5 x 2.1) by voltage in range 7 ... 15V
- Protection against reverse voltage polarity
- Possibility of power via USB connector
- On-board RGB LED and user LED
- On-board microcontroller reset-button and user push-button
- USB connector protected against electrostatic discharge
- Possibility of expanding the functionality by using additional shields
- Mounting holes with diameter 3 mm
- Module size: 69mm x 55mm x 14mm

Standard equipment

Code	Description
KA-NUCLEO-F411	• Assembled and tested module

Electrical schematics

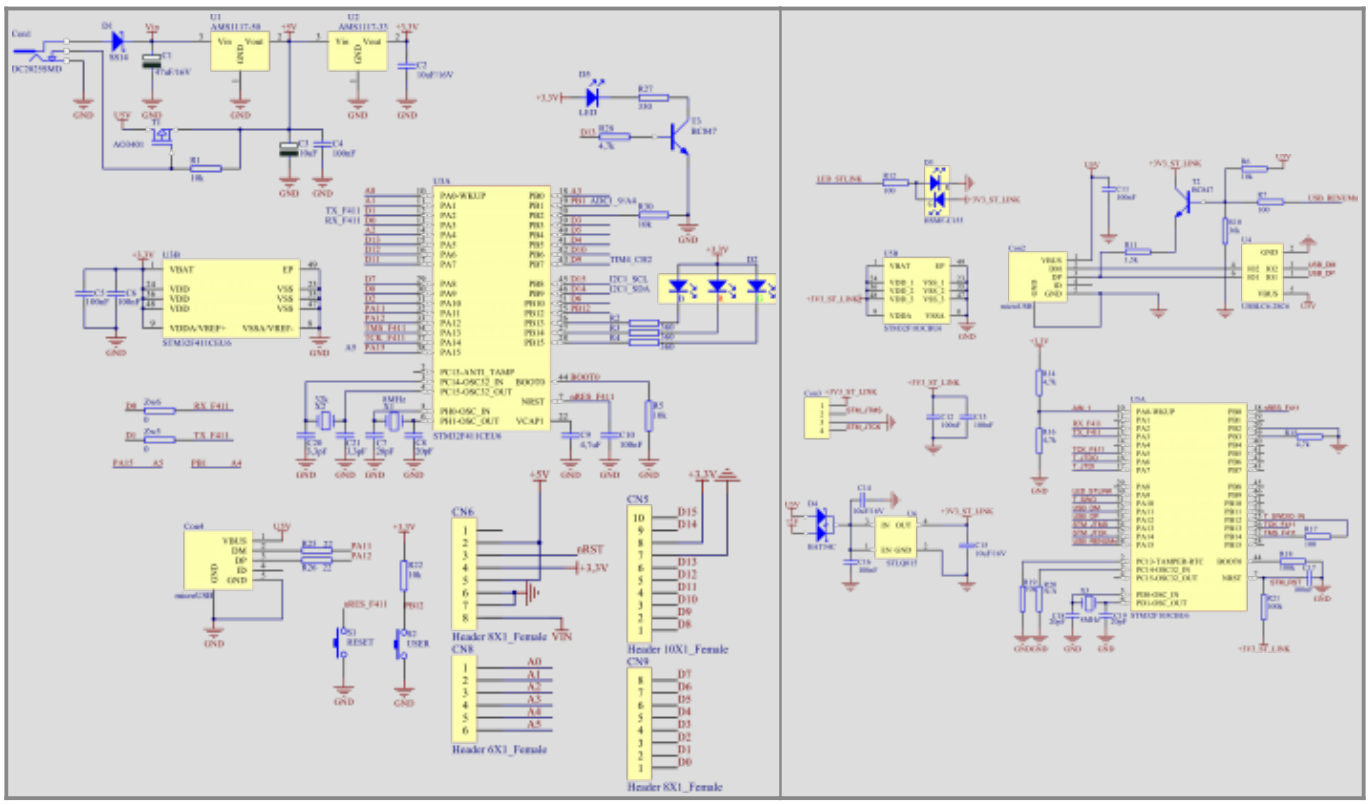

Microcontroller STM32F411CEU6

The board based on 32-bit microcontroller STM32F411CEU6 from STMicroelectronics in UFQFPN48 package. Chip has 512kB embedded Flash memory, 128kB RAM and can be running with frequency at 100 MHz. Microcontrollers GPIO lines are available on extension pin headers with Arduino UNO standard.

Attention!
Microcontrollers pins: PA0(A0), PA4(A2), PA5(D13) and PB5(D4) don't be a 5V tolerant pins. They shouldn't be supply with voltage exceeding 3.3V

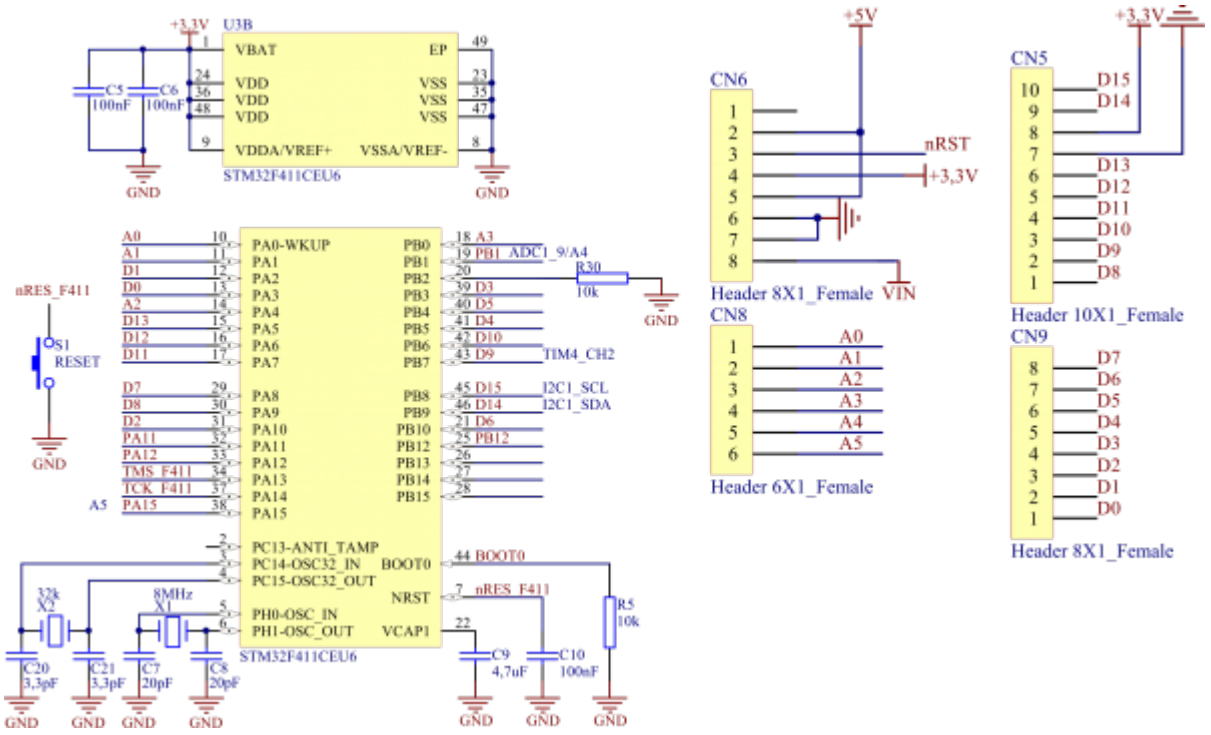

Power supply

KA-NUCLEO-F411CE board can be supply via both USB connector and external power supplier with connector 5.5 x 2.1. The board has embedded protection circuit against reverse voltage polarity.

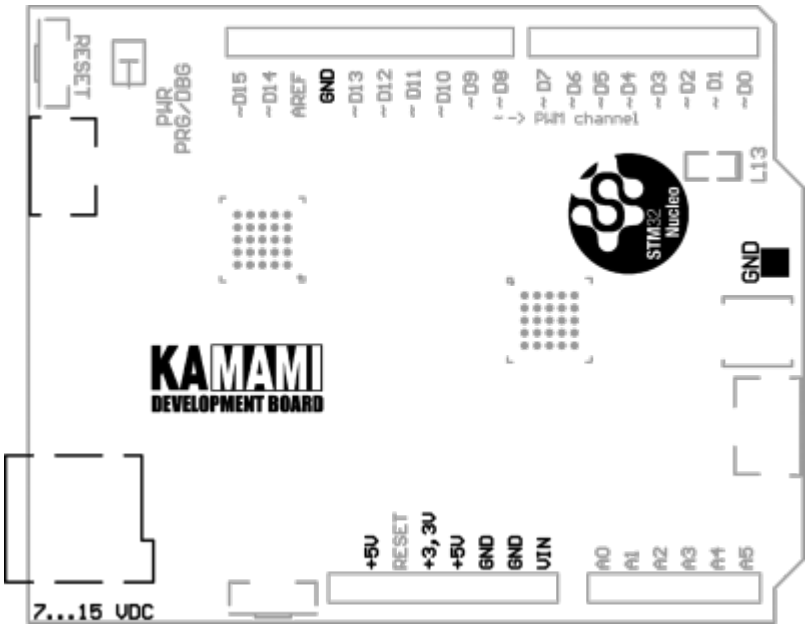

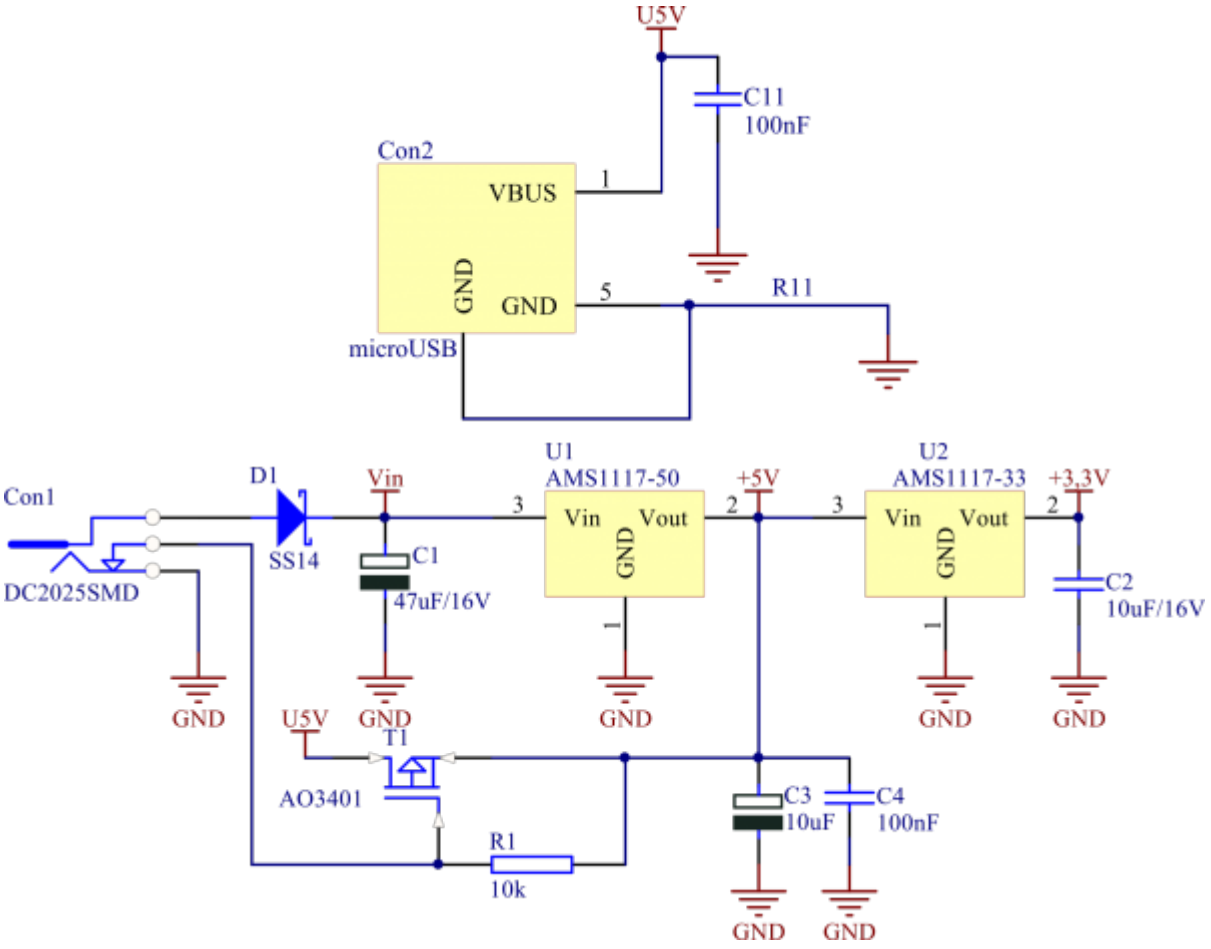

USB communication

On board programmer compatible with ST-Link/V2-1 make possible programming and debugging of STM32F411CEU6 microcontroller. State of programmer is signalling by the bicolour LED D3 – correct connecting of programmer to PC is signalling by constant red colour of LED, communication between programmer and microcontroller by blinking red and green LEDs and orange LED colour indicates communication error.

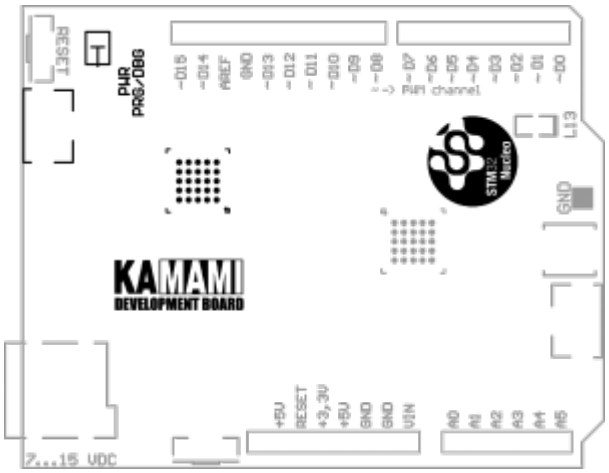

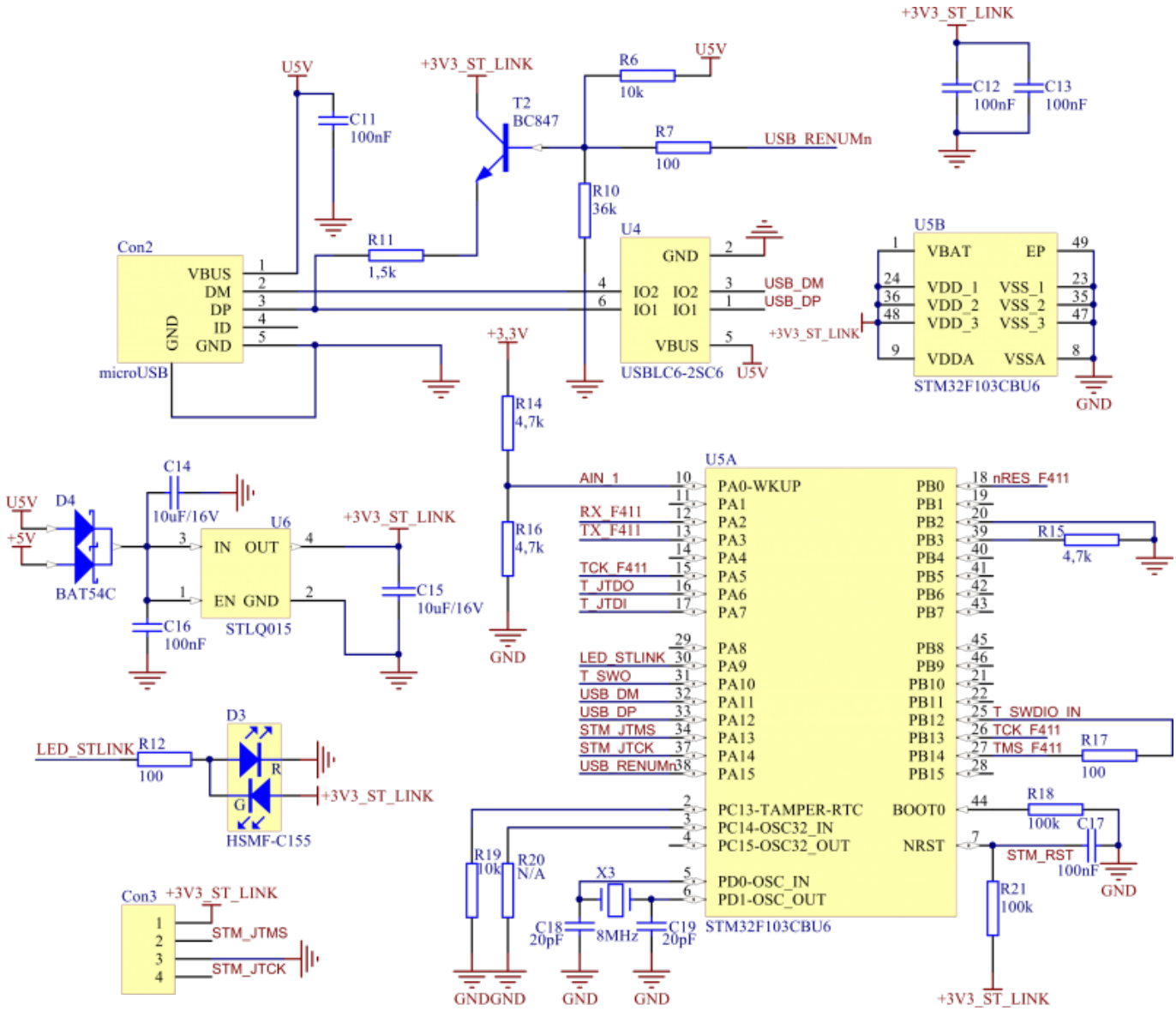
+3V3_ST_LINK
C12
100nF
C13
100nF
U5V
C11
100nF
+3V3_ST_LINK
T2
BC847
R6
10k
U5V
R7
100
USB_RENUMn
R10
36k
U4
GND
IO2 IO2
IO1 IO1
VBUS
USB_DM
USB_DP
+3V3_ST_LINK
USBLC6-2SC6
U5V
U5B
VBAT
EP
VDD_1
VDD_2
VDD_3
VDDA
VSS_1
VSS_2
VSS_3
VSSA
STM32F103CBU6
GND
Con2
VBUS
DM
DP
ID
GND
microUSB
R11
1,5k
+3,3V
R14
4,7k
R16
4,7k
GND
C14
10uF/16V
U5V
D4
+5V
BAT54C
U6
IN OUT
EN GND
STLQ015
C16
100nF
+3V3_ST_LINK
C15
10uF/16V
U5A
AIN_1
RX_F411
TX_F411
TCK_F411
T_JTDO
T_JTDI
LED_STLINK
T_SWO
USB_DM
USB_DP
STM_JTMS
STM_JTCK
USB_RENUMn
PA0-WKUP
PA1
PA2
PA3
PA4
PA5
PA6
PA7
PA8
PA9
PA10
PA11
PA12
PA13
PA14
PA15
PB0
PB1
PB2
PB3
PB4
PB5
PB6
PB7
PB8
PB9
PB10
PB11
PB12
PB13
PB14
PB15
nRES_F411
R15
4,7k
T_SWDIO_IN
TCK_F411
TMS_F411
R17
100
D3
LED_STLINK
R12
100
R
G
+3V3_ST_LINK
HSMF-C155
PC13-TAMPER-RTC
PC14-OSC32_IN
PC15-OSC32_OUT
PD0-OSC_IN
PD1-OSC_OUT
BOOT0
NRST
R18
100k
C17
100nF
STM_RST
GND
R19
10k
R20
N/A
X3
8MHz
C18
20pF
C19
20pF
R21
100k
GNDGND
GND
GND
+3V3_ST_LINK
STM32F103CBU6
Con3
+3V3_ST_LINK
STM_JTMS
STM_JTCK

User LED and RGB LED

KA-NUCLEO-F411CE board is equipped with two user LED – L3 LED (connected to D13 microcontrollers pin) and tricolour LED (with cathode connected to pins PB13...PB15 of microcontroller); both LEDs can be control by user program.

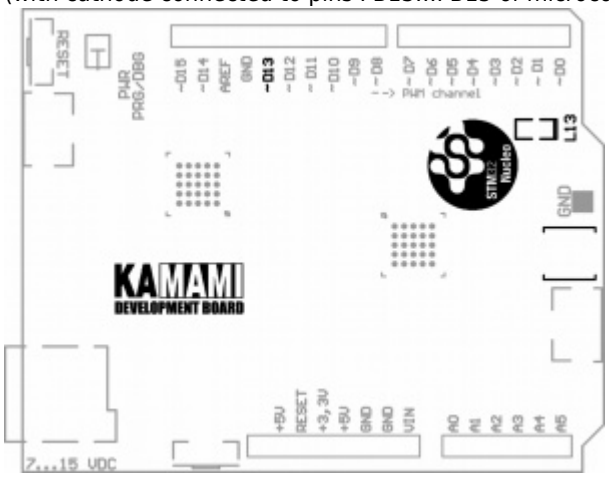

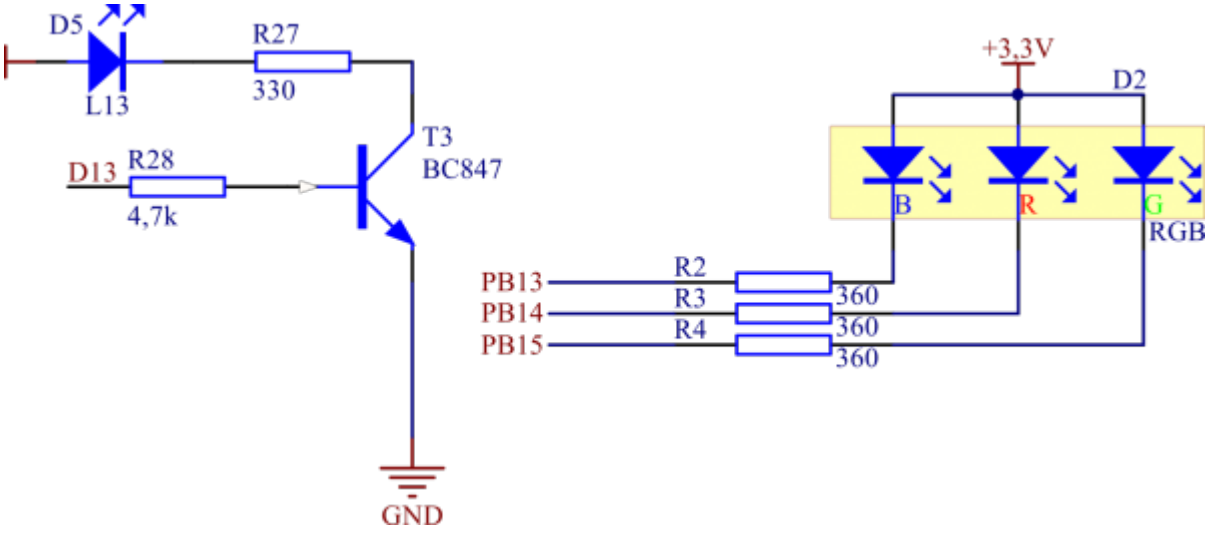

USB Host connector

Embedded microUSB connector on KA-NUCLEO-F411CE board is with microcontroller connected. That make possible to used microcontroller as USB Full Speed device.

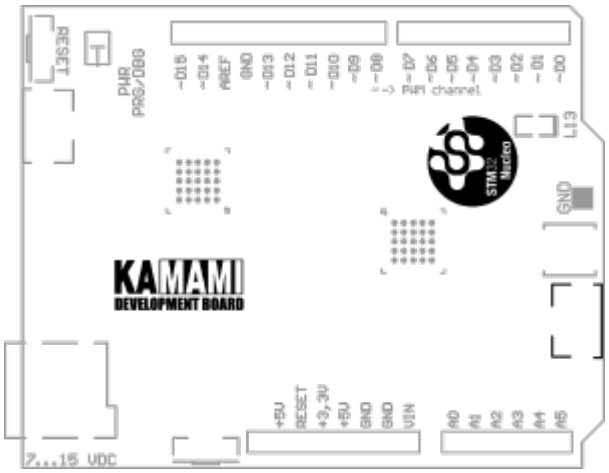

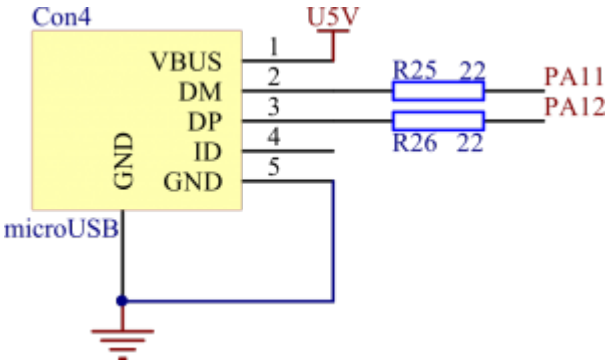

User push-button

On KA-NUCLEO-F411CE board is placed user push-button connected to PB12 pin.

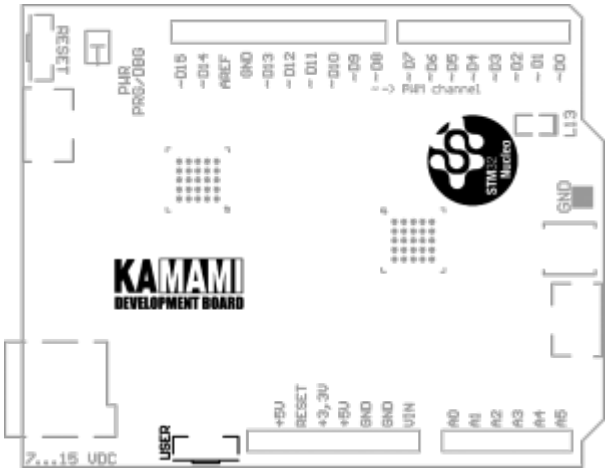

Multimedia

That's how it was created KA-NUCLEO-F411CE board

https://www.youtube.com/watch?v=RMB5EmoDF7c

External links

- Datasheet of STMicroelectronics STM32F411CEU6 microcontroller

BTC Korporacja
05-120 Legionowo
ul. Lwowska 5
tel.: (22) 767-36-20
faks: (22) 767-36-33
e-mail:
biuro@kamami.pl
https://kamami.pl

Zastrzegamy prawo do wprowadzania zmian bez uprzedzenia.
Oferowane przez nas płytki drukowane mogą się różnić od prezentowanej w dokumentacji, przy czym zmianom nie ulegają jej właściwości użytkowe.
BTC Korporacja gwarantuje zgodność produktu ze specyfikacją.
BTC Korporacja nie ponosi odpowiedzialności za jakiekolwiek szkody powstałe bezpośrednio lub pośrednio w wyniku użycia lub nieprawidłowego działania produktu.
BTC Korporacja zastrzega sobie prawo do modyfikacji niniejszej dokumentacji bez uprzedzenia.