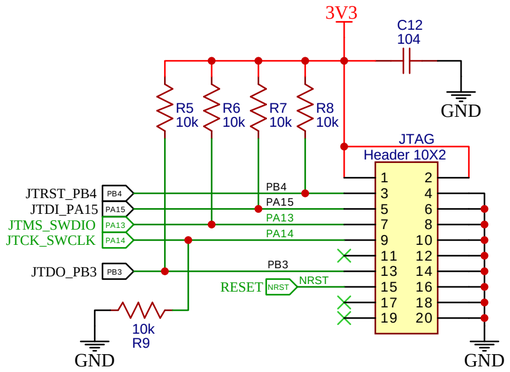


JTAG

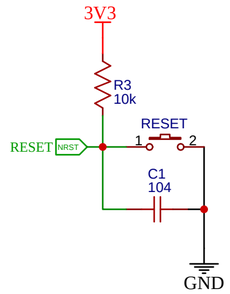


RESET

| STM32F103RCT6 BOOT CONGIGURATION | | |
|---|---|---|
| BOOT0 | BOOT1 | BOOT MODE |
| 0 | x | MAIN FLASH MEMORY |
| 1 | 0 | SYSTEM MEMORY (BOOTLOADER) |
| 1 | 1 | EMBEDDED STATIC RAM (INTERNAL) |

LEAD TO I/O CONNECTORS

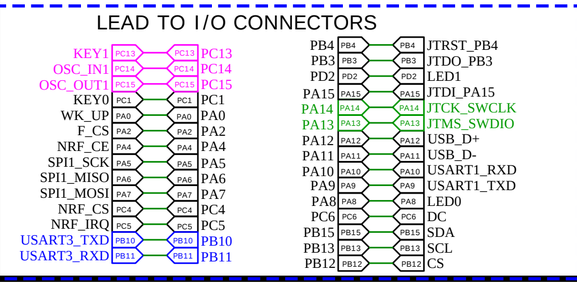


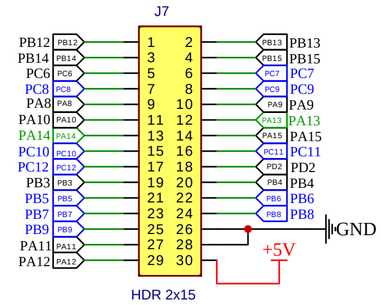


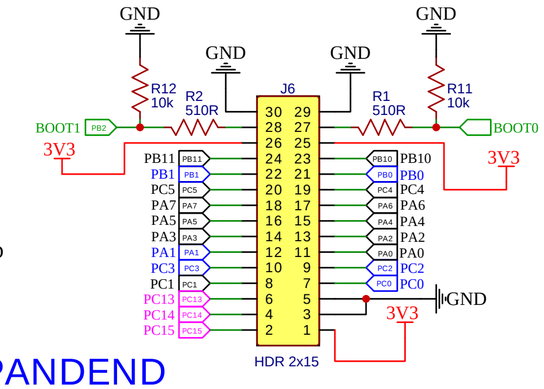


I/O CONNECTORS EXPANDEND

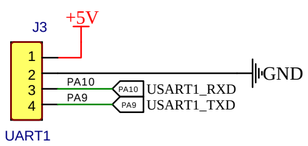


USART1

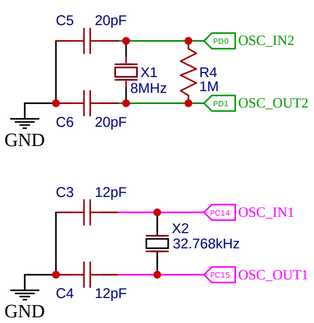


CRISTALS

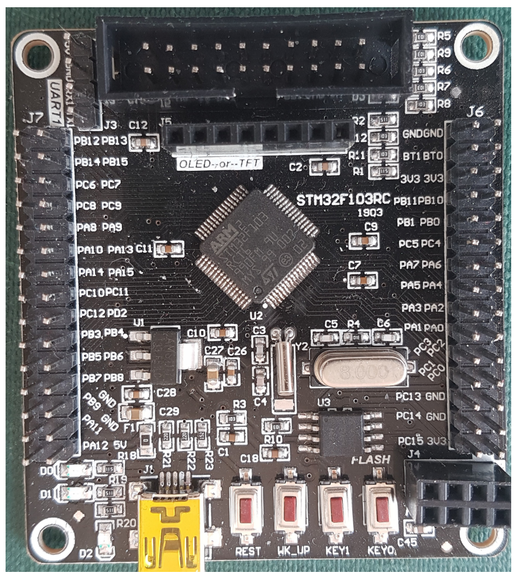


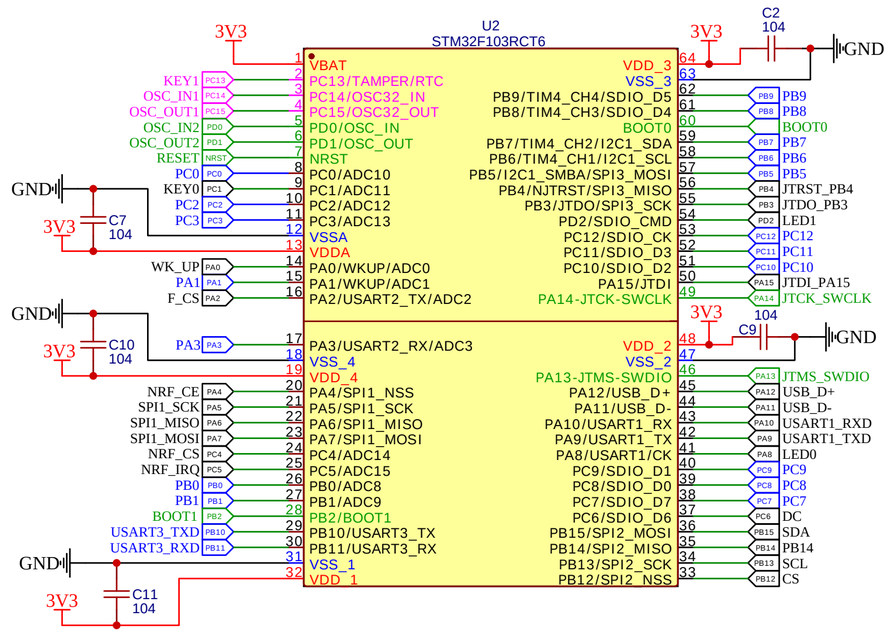


STM32-CPU

STM32F103RCT6 @72MHz
RAM: 48K
FLASH: 256K
PACKAGE: LQFP64

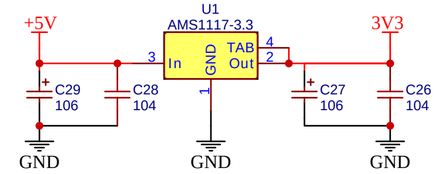


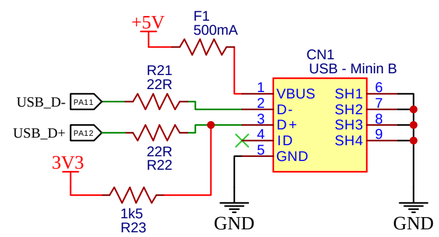


USB STM32 USB_SLAVE

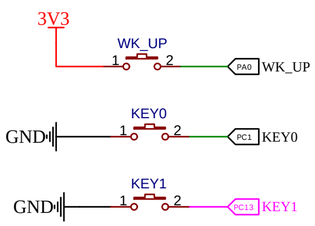


KEYS

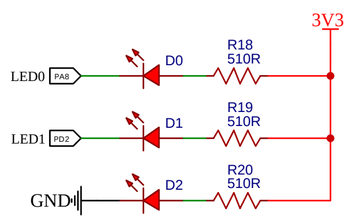


LED

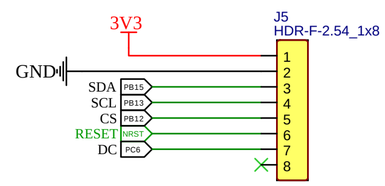


OLED

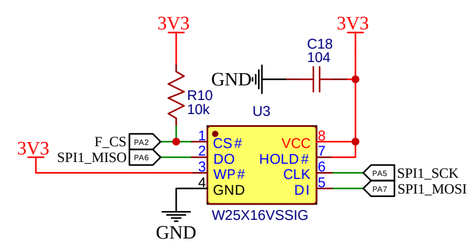


SPI FLASH

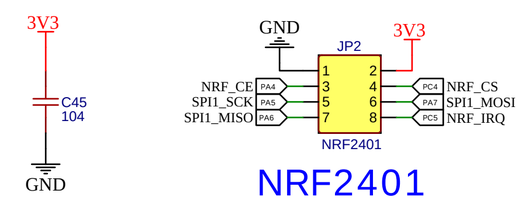


NRF2401

| | |
|---|---|
| TITLE: STM32F103RCT6 MINI DEVBOARD | REV: 1.0 |
| Company: ALIENTEK | Sheet: 1/1 |
| Date: 2023-05-02 Drawn By: wegi1 | |

J4

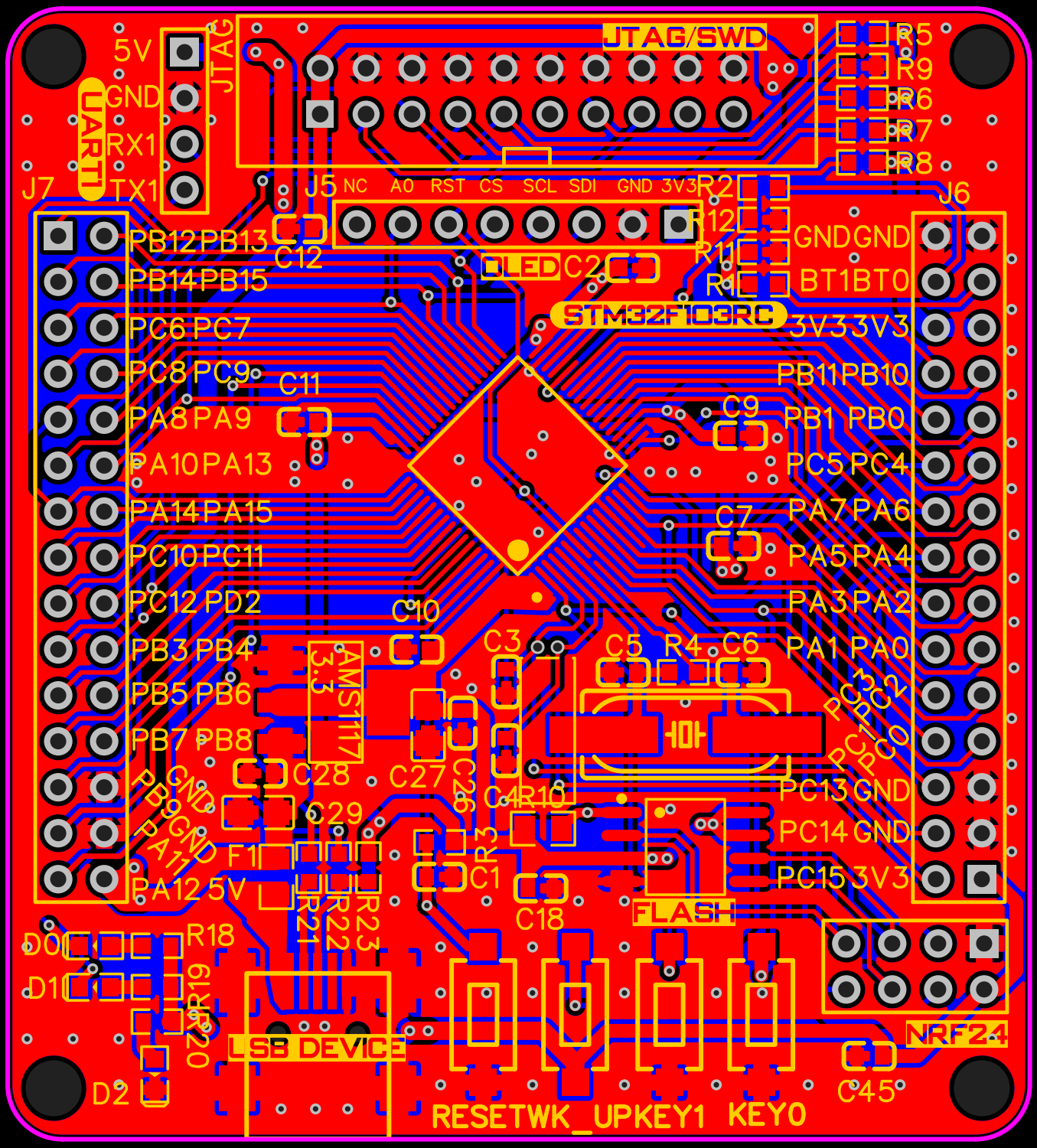
JTAG/SWD
JTAG
5V
GND
RX1
TX1
UART
J7
J5
NC A0 RST CS SCL SDI GND 3V3
OLED
J6
STM32F103RC
PB12 PB13
PB14 PB15
PC6 PC7
PC8 PC9
PA8 PA9
PA10 PA13
PA14 PA15
PC10 PC11
PC12 PD2
PB3 PB4
PB5 PB6
PB7 PB8
PB9 GND
PA11 GND
PA12 5V
GND GND
BT1 BT0
3V3 3V3
PB11 PB10
PB1 PB0
PC5 PC4
PA7 PA6
PA5 PA4
PA3 PA2
PA1 PA0
PC3 PC2
PC1 PC0
PC13 GND
PC14 GND
PC15 3V3
AMS1117 3.3
FLASH
NRF24
LSB DEVICE
RESETWK_UP KEY1 KEY0
D0
D1
D2
R18
R19
R20
R21
R22
R23
F1
C1
C2
C3
C4
C5
C6
C7
C9
C10
C11
C12
C18
C26
C27
C28
C29
C45
R1
R2
R3
R4
R5
R6
R7
R8
R9
R10
R11
R12

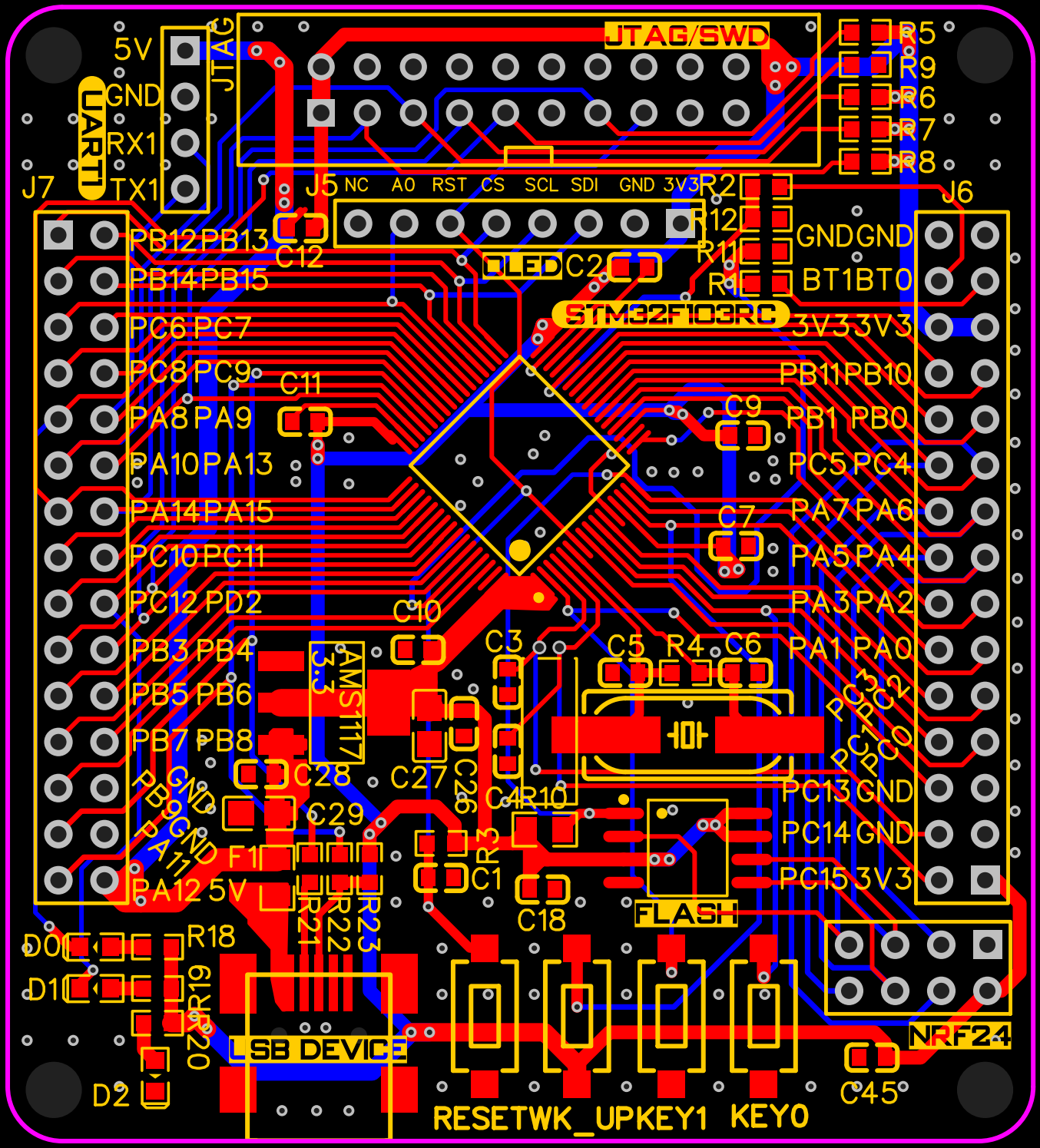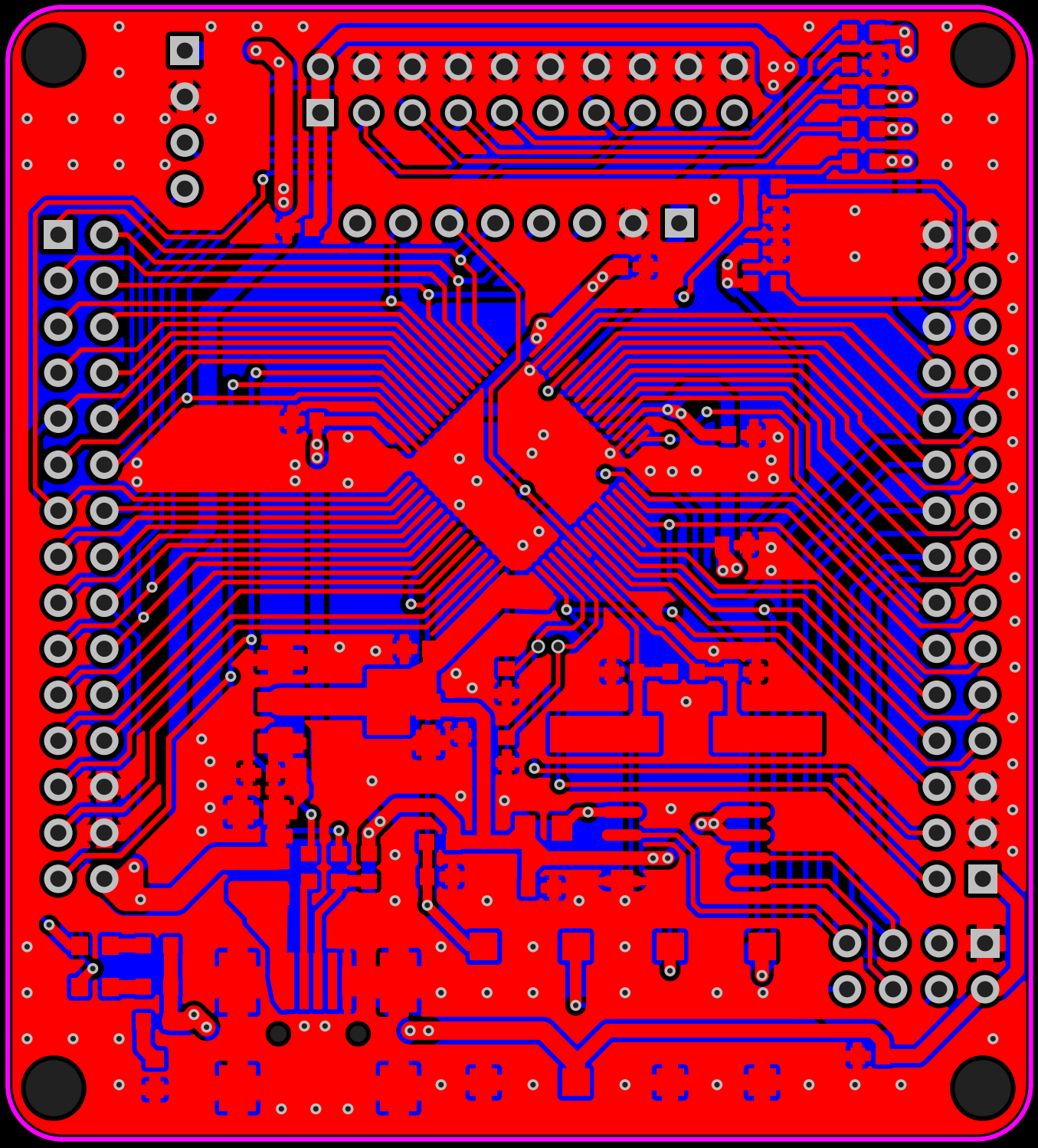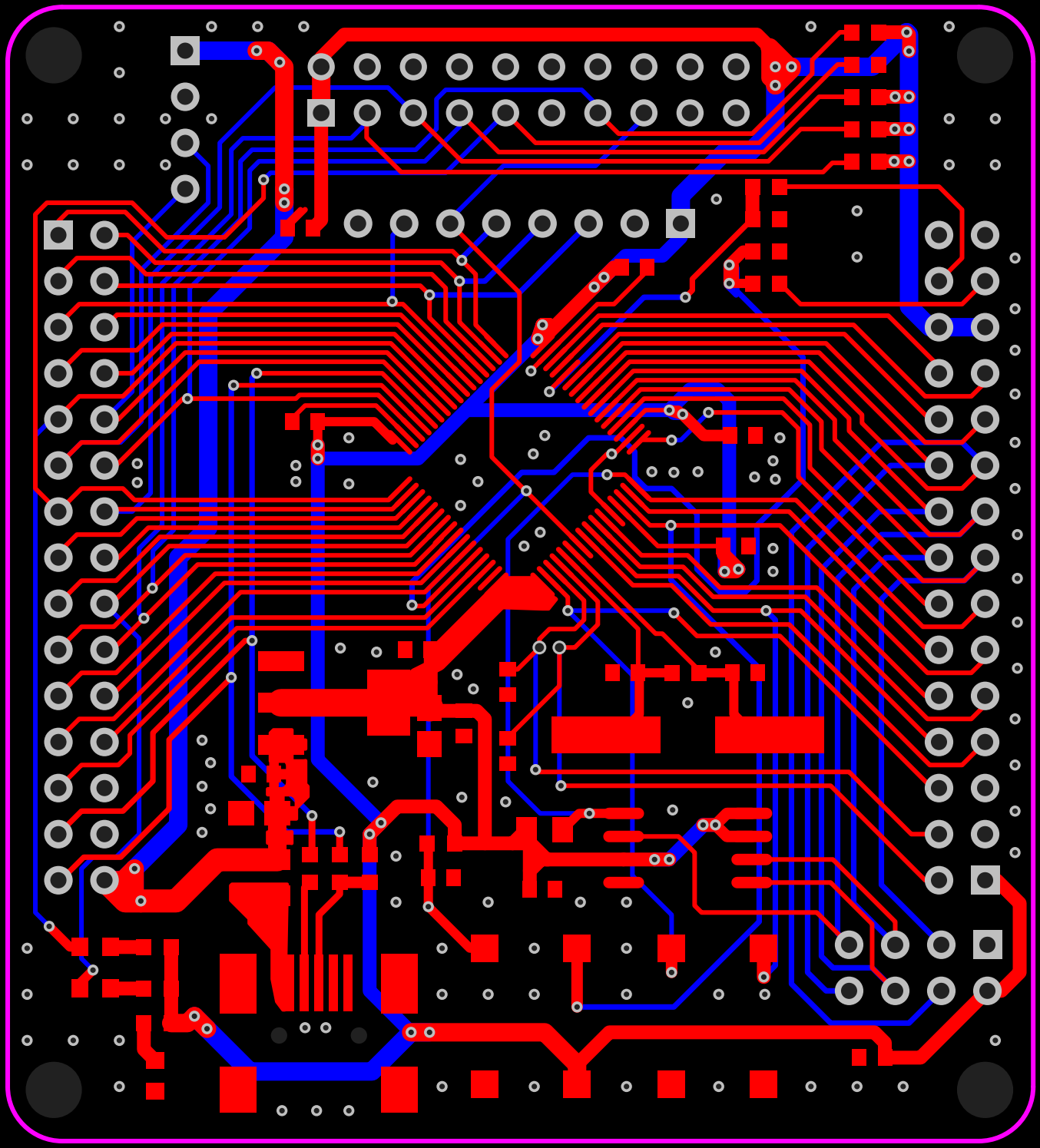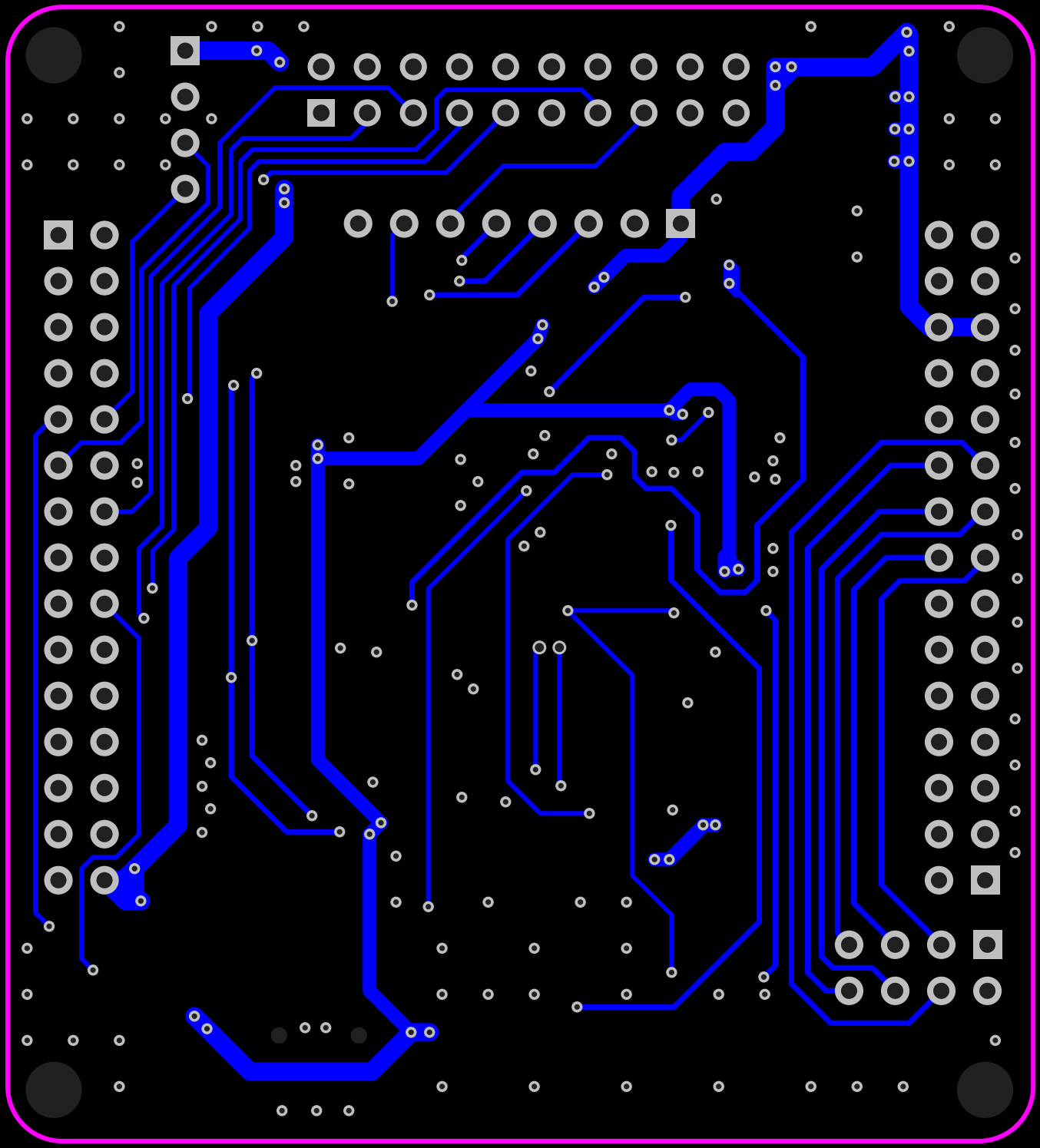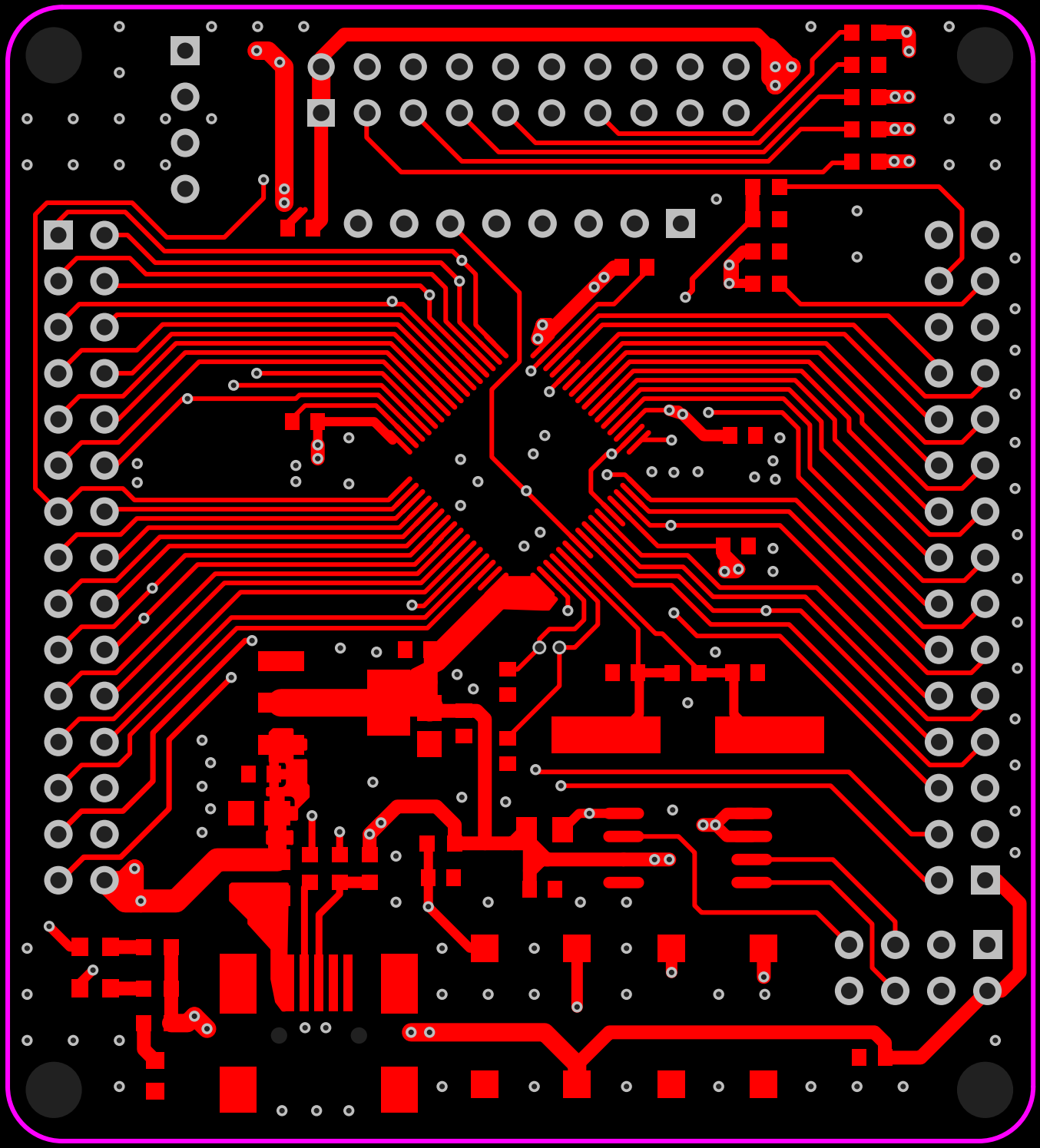
JTAG/SWD
JTAG
UART
5V
GND
RX1
TX1
J7
J5
NC A0 RST CS SCL SDI GND 3V3
OLED
STM32F103RC
J6
R5
R9
R6
R7
R8
R2
R12
R11
R1
GND GND
BT1 BT0
3V3 3V3
PB11 PB10
PB1 PB0
PC5 PC4
PA7 PA6
PA5 PA4
PA3 PA2
PA1 PA0
PC3 PC2
PC1 PC0
PC13 GND
PC14 GND
PC15 3V3
PB12 PB13
PB14 PB15
PC6 PC7
PC8 PC9
PA8 PA9
PA10 PA13
PA14 PA15
PC10 PC11
PC12 PD2
PB3 PB4
PB5 PB6
PB7 PB8
PB9 GND
PA11 GND
PA12 5V
C12
C2
C11
C9
C7
C10
C3
C5
R4
C6
AMS1117 3.3
C28
C29
C27
C26
C4
R10
R3
C1
C18
F1
R21
R22
R23
FLASH
D0
D1
R18
R19
R20
D2
LSB DEVICE
NRF24
C45
RESETWK_UP
KEY1
KEY0