Radio

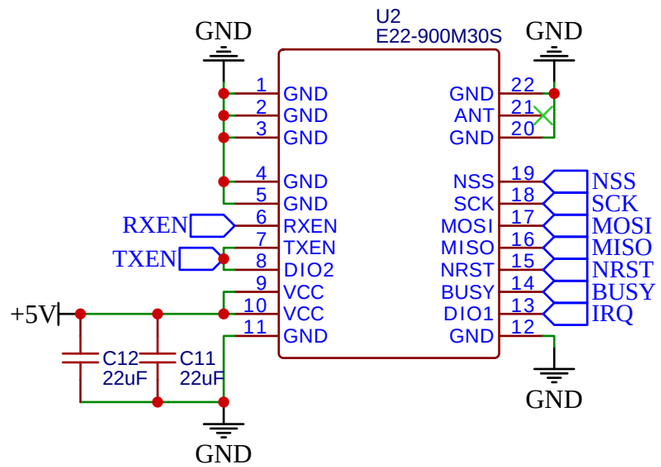

GPS

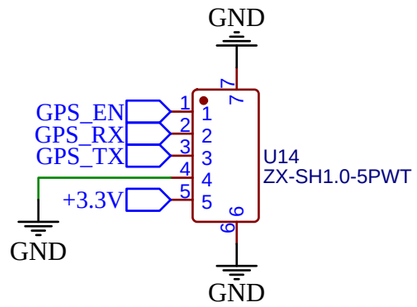

MCU

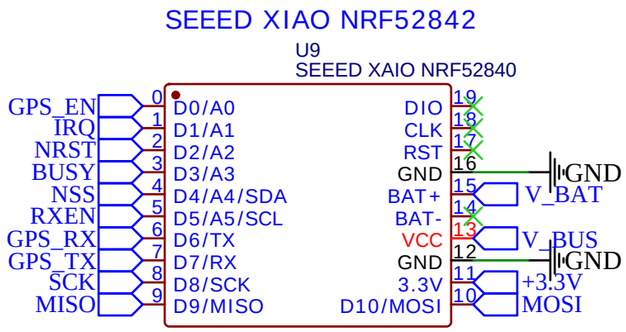

TITLE: Sheet_1		REV: 1.0
EasyEDA	Company: Your Company	Sheet: 1/1
	Date: 2024-12-23 Drawn By: wehooper4	

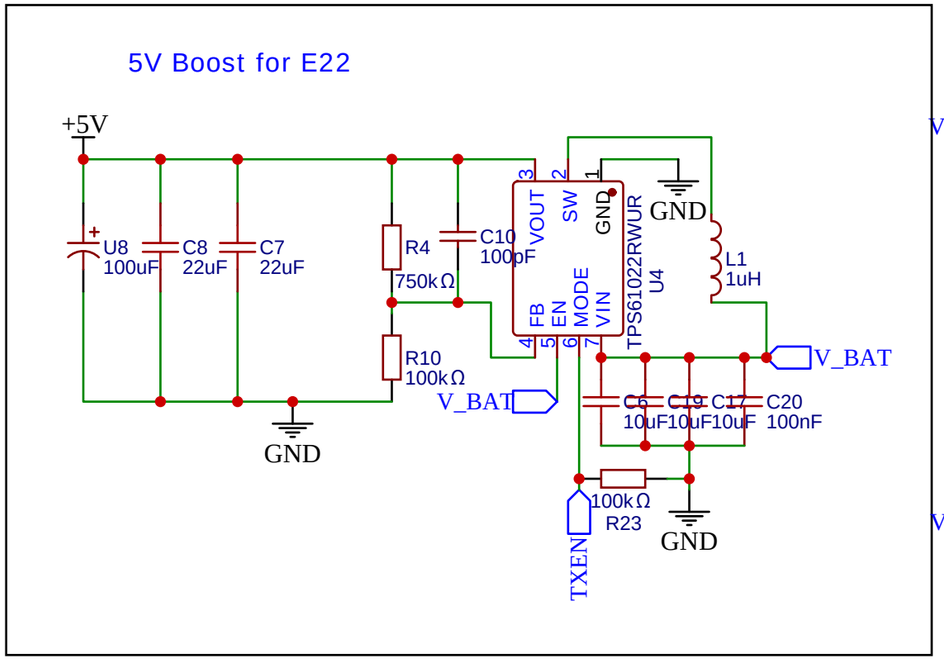

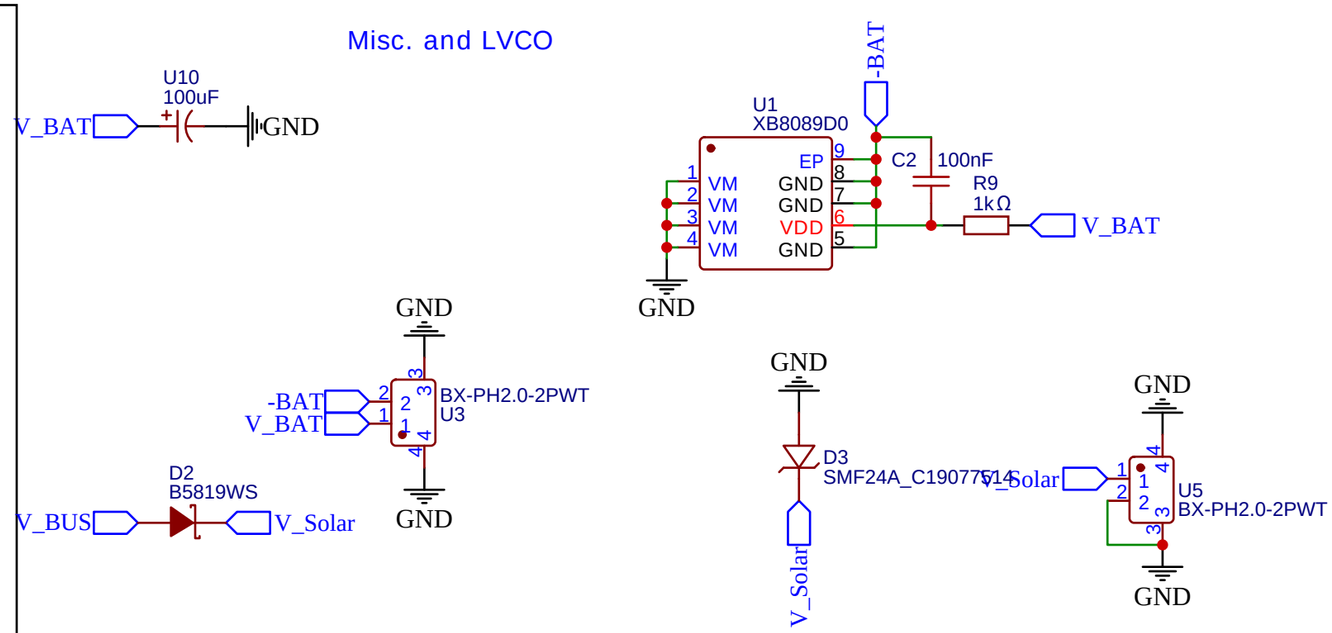

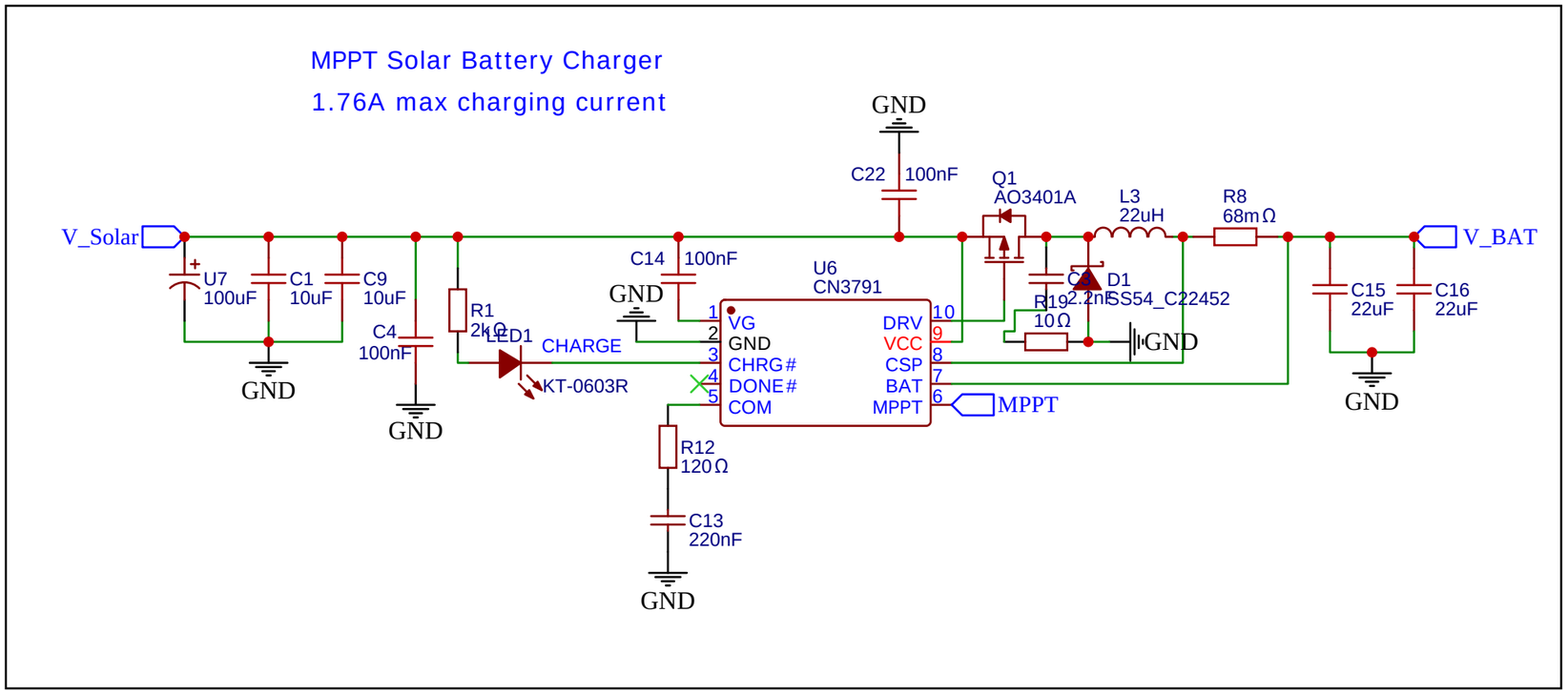

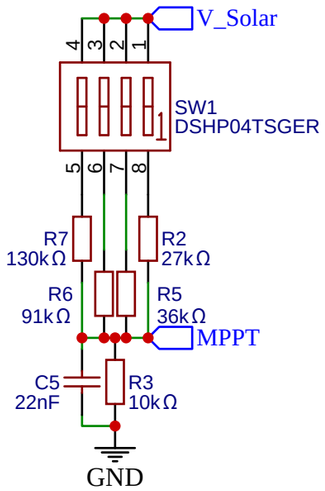

TITLE: Sheet_2	REV: 1.0
EasyEDA	Company: Your Company / Sheet: 1/1
	Date: 2024-12-23 Drawn By: wehooper4