Radio

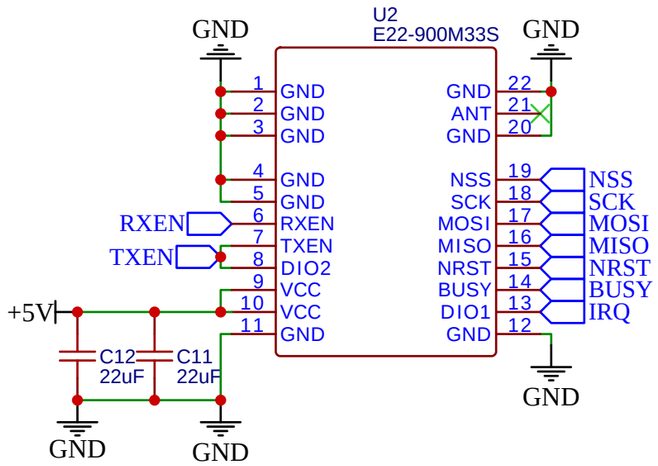
U2
E22-900M33S
GND
GND
GND

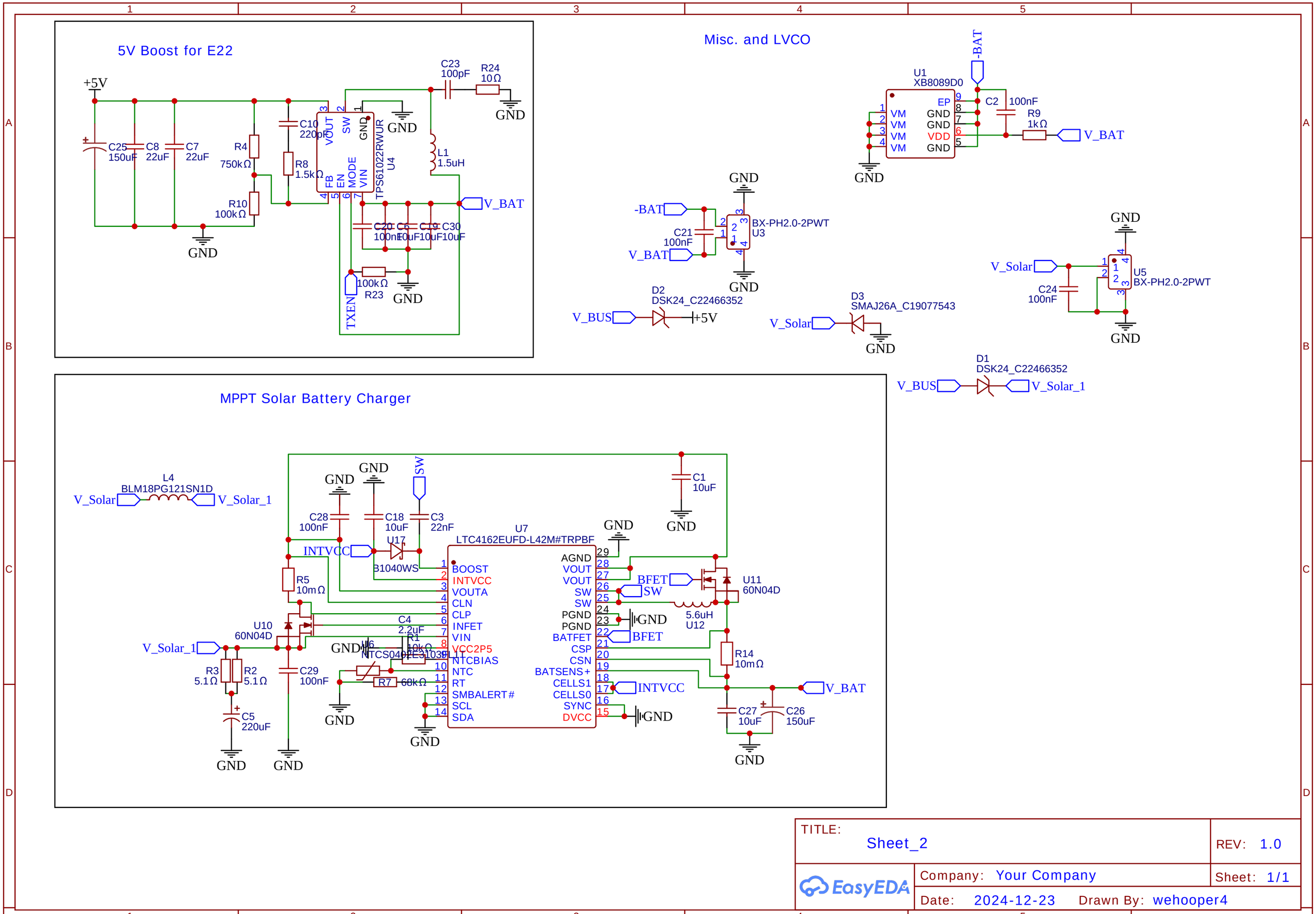
5V Boost for E22
+5V
C25 150uF
C8 22uF
C7 22uF
R4 750kΩ
R10 100kΩ
R8 1.5kΩ
C10 220pF
VOUT
SW
GND
FB
EN
MODE
VIN
TPS61022RWUR
U4
C23 100pF
R24 10Ω
L1 1.5uH
V_BAT
C20 100nF
C6 10uF
C19 10uF
C30 10uF
100kΩ R23
TXEN
GND
Misc. and LVCO
U1 XB8089D0
-BAT
EP
VM
GND
VDD
C2 100nF
R9 1kΩ
V_BAT
-BAT
C21 100nF
V_BAT
BX-PH2.0-2PWT U3
D2 DSK24_C22466352
V_BUS
+5V
D3 SMAJ26A_C19077543
V_Solar
V_Solar
C24 100nF
U5 BX-PH2.0-2PWT
D1 DSK24_C22466352
V_BUS
V_Solar_1
MPPT Solar Battery Charger
L4 BLM18PG121SN1D
V_Solar
V_Solar_1
C28 100nF
C18 10uF
C3 22nF
SW
U17 B1040WS
INTVCC
R5 10mΩ
U10 60N04D
C4 2.2uF
R1 10kΩ
NTCS0402E3103FL1T
R7 68kΩ
R3 5.1Ω
R2 5.1Ω
C29 100nF
C5 220uF
U7 LTC4162EUFD-L42M#TRPBF
BOOST
INTVCC
VOUTA
CLN
CLP
INFET
VIN
VCC2P5
NTCBIAS
NTC
RT
SMBALERT#
SCL
SDA
AGND
VOUT
SW
PGND
BATFET
CSP
CSN
BATSENS+
CELLS1
CELLS0
SYNC
DVCC
C1 10uF
BFET
U11 60N04D
5.6uH U12
R14 10mΩ
C27 10uF
C26 150uF
TITLE: Sheet_2
REV: 1.0
Company: Your Company
Sheet: 1/1
Date: 2024-12-23
Drawn By: wehooper4
EasyEDA