23rd Nov

D-H zero config

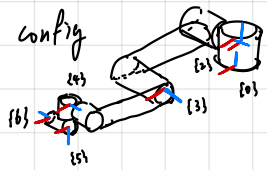

TM5-900 , FK, and IK

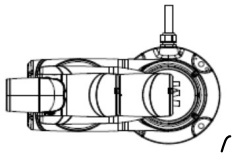

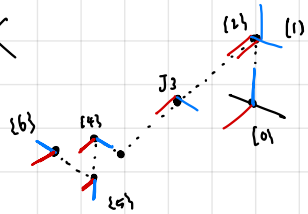

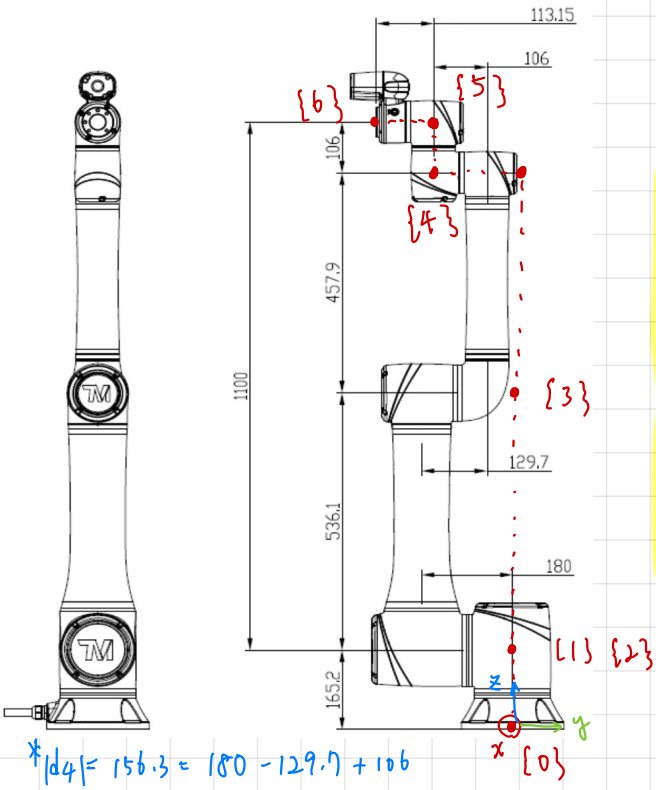

*$|d_4| = 156.3 = 180 - 129.7 + 106$

D-H table

i	α_{i-1}	a_{i-1}	d_i	θ_i
1	0	0	$d_1 = 165.2$	θ_1
2	$\alpha_1 = -\frac{\pi}{2}$	0	0	θ_2
3	0	$a_2 = 536.1$	0	θ_3
4	0	$a_3 = 457.9$	$d_4 = -156.3$*	θ_4
5	$\alpha_4 = -\frac{\pi}{2}$	0	$d_5 = 106$	θ_5
6	$\alpha_5 = -\frac{\pi}{2}$	0	$d_6 = 113.15$	θ_6

CGA IK preferable pose

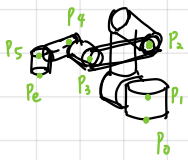

$$\rightarrow q_{IK} = \begin{bmatrix} \theta_1 \\ \vdots \\ \theta_6 \end{bmatrix} = \begin{pmatrix} 0 \\ \text{나눈 나머지} \\ \text{나눈 나머지} \\ 0 \end{pmatrix}$$

* $P_i \neq$ origin of frame $\{i\}$!!!

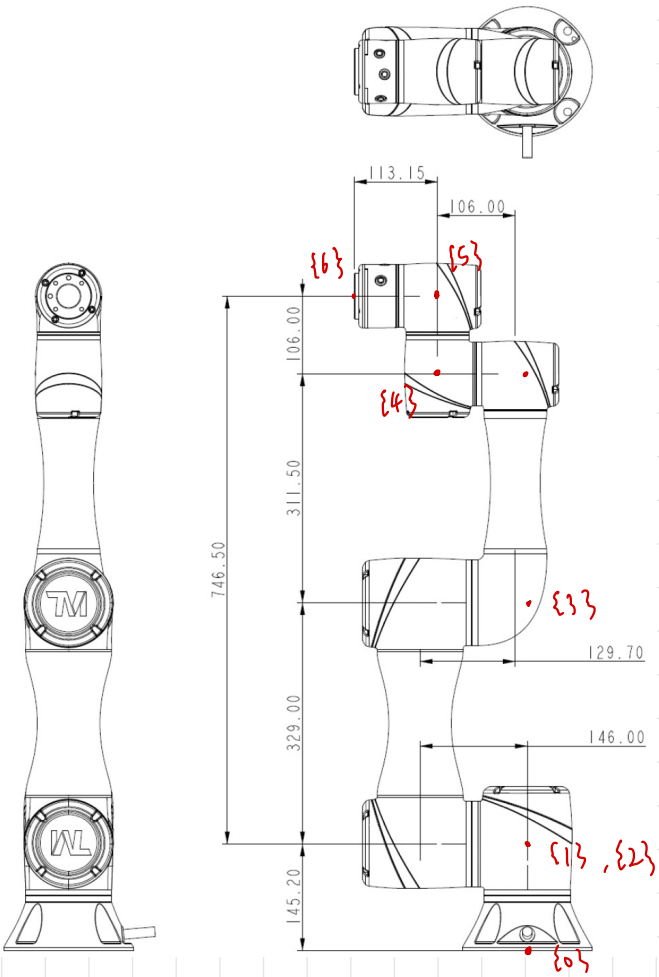

D-H table

i	α_{i-1}	a_{i-1}	d_i	θ_i
1	0	0	$d_1 = 145.2$	θ_1
2	$\alpha_1 = -\frac{\pi}{2}$	0	0	θ_2
3	0	$a_2 = 329.0$	0	θ_3
4	0	$a_3 = 311.5$	$d_4 = -122.3$	θ_4
5	$\alpha_4 = -\frac{\pi}{2}$	0	$d_5 = 106$	θ_5
6	$\alpha_5 = -\frac{\pi}{2}$	0	$d_6 = 113.15$	θ_6

*$|d_4| = 122.3 = 146 - 129.7 + 106$