Chapter 8: Deadlocks

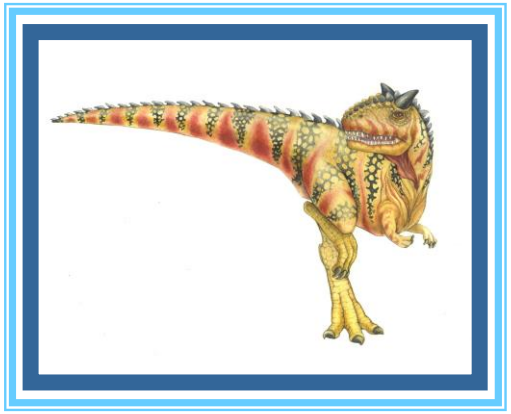

Silberschatz, Galvin and Gagne ©2018

Chapter 8: Deadlocks

System Model

Deadlock Characterization

Methods for Handling Deadlocks

Deadlock Prevention

Deadlock Avoidance

Deadlock Detection

Recovery from Deadlock

Chapter Objectives

To develop a description of deadlocks, which prevent sets of concurrent processes from completing their tasks

To present a number of different methods for preventing or avoiding deadlocks in a computer system

System Model

System consists of resources

Resource types $R_1, R_2, \ldots, R_m$

CPU cycles, memory space, I/O devices

Each resource type R_i has W_i instances.

Each process utilizes a resource as follows:

request

use

release

Deadlock Characterization

Deadlock can arise if four conditions hold simultaneously.

- **Mutual exclusion**: only one process at a time can use a resource
- **Hold and wait**: a process holding at least one resource is waiting to acquire additional resources held by other processes
- **No preemption**: a resource can be released only voluntarily by the process holding it, after that process has completed its task
- **Circular wait**: there exists a set $\{P_0, P_1, \ldots, P_n\}$ of waiting processes such that P_0 is waiting for a resource that is held by P_1, P_1 is waiting for a resource that is held by P_2, …, P_{n-1} is waiting for a resource that is held by P_n, and P_n is waiting for a resource that is held by P_0.

Deadlock with Mutex Locks

Deadlocks can occur via system calls, locking, etc.

See example box in text page 318 for mutex deadlock

Resource-Allocation Graph

A set of vertices *V* and a set of edges *E*.

V is partitioned into two types:

$P = \{P_1, P_2, \ldots, P_n\}$, the set consisting of all the processes in the system

$R = \{R_1, R_2, \ldots, R_m\}$, the set consisting of all resource types in the system

request edge – directed edge $P_i \rightarrow R_j$

assignment edge – directed edge $R_j \rightarrow P_i$

Resource-Allocation Graph (Cont.)

Process

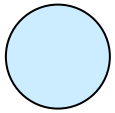

Resource Type with 4 instances

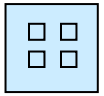

P_i requests instance of R_j

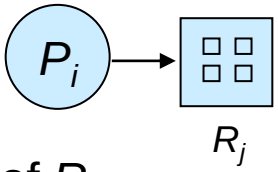

P_i is holding an instance of R_j

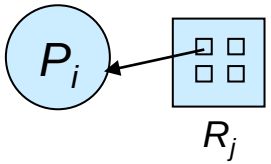

Example of a Resource Allocation Graph

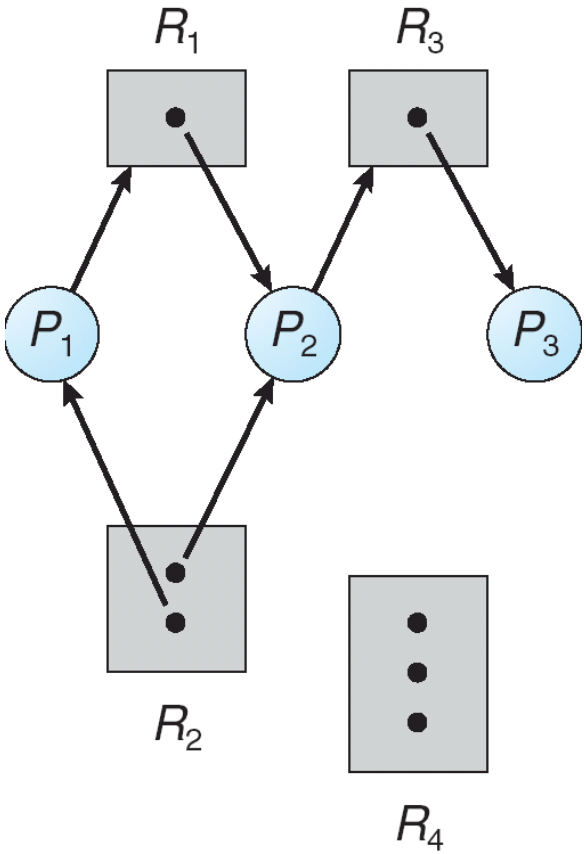

Resource Allocation Graph With A Deadlock

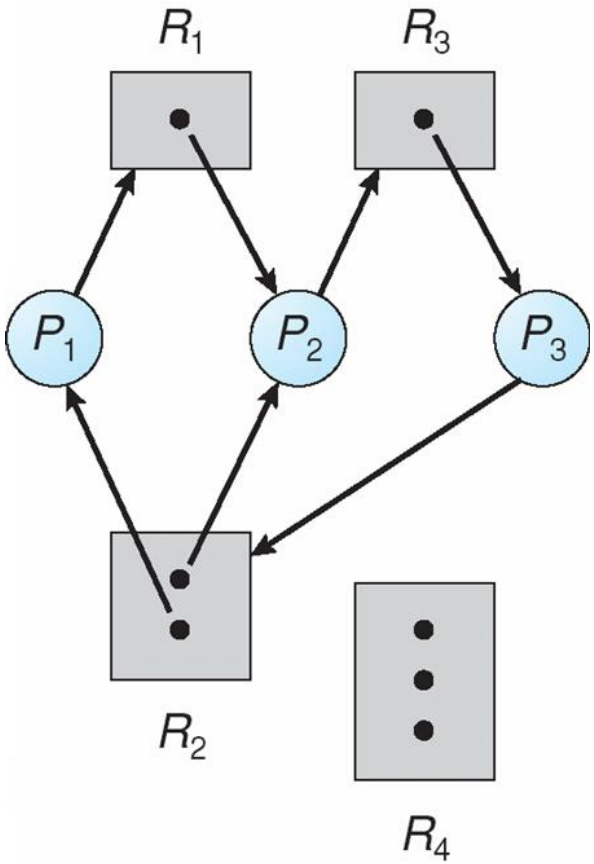

Graph With A Cycle But No Deadlock

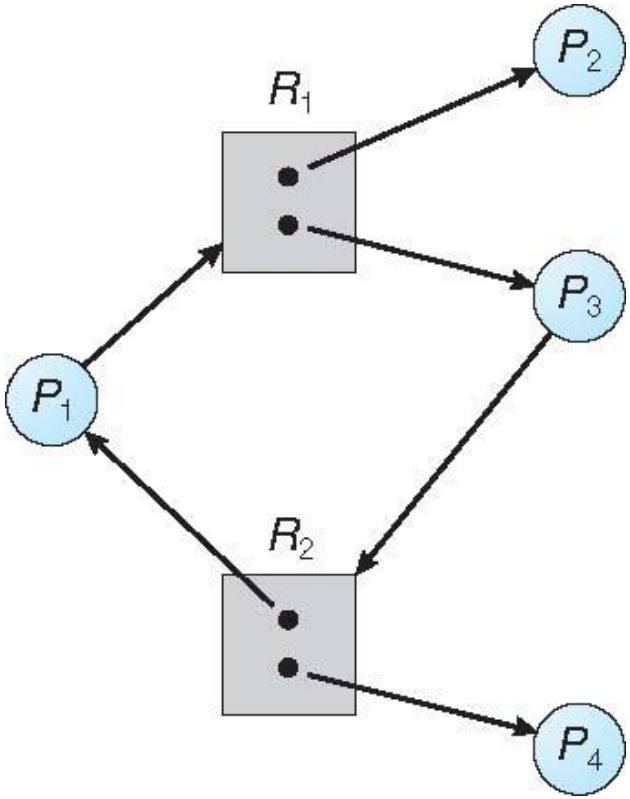

Basic Facts

If graph contains no cycles $\Rightarrow$ no deadlock

If graph contains a cycle $\Rightarrow$

- if only one instance per resource type, then deadlock
- if several instances per resource type, possibility of deadlock

Methods for Handling Deadlocks

Ensure that the system will ***never*** enter a deadlock state:

- Deadlock prevention
- Deadlock avoidence

Allow the system to enter a deadlock state and then recover

Ignore the problem and pretend that deadlocks never occur in the system; used by most operating systems, including UNIX

Deadlock Prevention

Restrain the ways request can be made

Mutual Exclusion – not required for sharable resources (e.g., read-only files); must hold for non-sharable resources

Hold and Wait – must guarantee that whenever a process requests a resource, it does not hold any other resources

Require process to request and be allocated all its resources before it begins execution, or allow process to request resources only when the process has none allocated to it.

Low resource utilization; starvation possible

Deadlock Prevention (Cont.)

No Preemption –

- If a process that is holding some resources requests another resource that cannot be immediately allocated to it, then all resources currently being held are released
- Preempted resources are added to the list of resources for which the process is waiting
- Process will be restarted only when it can regain its old resources, as well as the new ones that it is requesting

Circular Wait – impose a total ordering of all resource types, and require that each process requests resources in an increasing order of enumeration

Deadlock Example

```
/* thread one runs in this function */
void *do_work_one(void *param)
{
   pthread_mutex_lock(&first_mutex);
   pthread_mutex_lock(&second_mutex);
   /** * Do some work */
   pthread_mutex_unlock(&second_mutex);
   pthread_mutex_unlock(&first_mutex);
   pthread_exit(0);
}
/* thread two runs in this function */
void *do_work_two(void *param)
{
   pthread_mutex_lock(&second_mutex);
   pthread_mutex_lock(&first_mutex);
   /** * Do some work */
   pthread_mutex_unlock(&first_mutex);
   pthread_mutex_unlock(&second_mutex);
   pthread_exit(0);
}
```

Deadlock Example with Lock Ordering

```
void transaction(Account from, Account to, double amount)
{
   mutex lock1, lock2;
   lock1 = get_lock(from);
   lock2 = get_lock(to);
   acquire(lock1);
      acquire(lock2);
         withdraw(from, amount);
         deposit(to, amount);
      release(lock2);
   release(lock1);
}
```

Transactions 1 and 2 execute concurrently. Transaction 1 transfers $25 from account A to account B, and Transaction 2 transfers $50 from account B to account A

Deadlock Avoidance

Requires that the system has some additional ***a priori*** information available

- Simplest and most useful model requires that each process declare the ***maximum number*** of resources of each type that it may need
- The deadlock-avoidance algorithm dynamically examines the resource-allocation state to ensure that there can never be a circular-wait condition
- Resource-allocation *state* is defined by the number of available and allocated resources, and the maximum demands of the processes

Safe State

When a process requests an available resource, system must decide if immediate allocation leaves the system in a safe state

System is in **safe state** if there exists a sequence $<P_1, P_2, \ldots, P_n>$ of ALL the processes in the systems such that for each P_i, the resources that P_i can still request can be satisfied by currently available resources + resources held by all the P_j, with $j < I$

That is:

- If P_i resource needs are not immediately available, then P_i can wait until all P_j have finished
- When P_j is finished, P_i can obtain needed resources, execute, return allocated resources, and terminate
- When P_i terminates, P_{i+1} can obtain its needed resources, and so on

Basic Facts

If a system is in safe state $\Rightarrow$ no deadlocks

If a system is in unsafe state $\Rightarrow$ possibility of deadlock

Avoidance $\Rightarrow$ ensure that a system will never enter an unsafe state.

Safe, Unsafe, Deadlock State

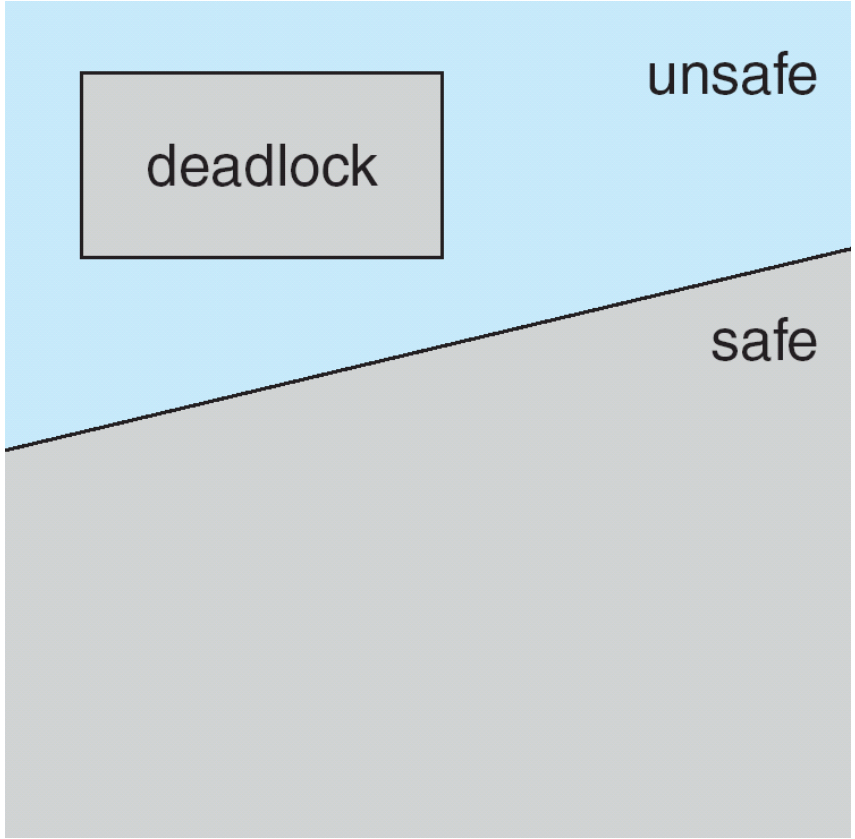

Avoidance Algorithms

Single instance of a resource type

Use a resource-allocation graph

Multiple instances of a resource type

Use the banker's algorithm

Resource-Allocation Graph Scheme

Claim edge $P_i \rightarrow R_j$ indicated that process P_j may request resource R_j; represented by a dashed line

Claim edge converts to request edge when a process requests a resource

Request edge converted to an assignment edge when the resource is allocated to the process

When a resource is released by a process, assignment edge reconverts to a claim edge

Resources must be claimed *a priori* in the system

Resource-Allocation Graph

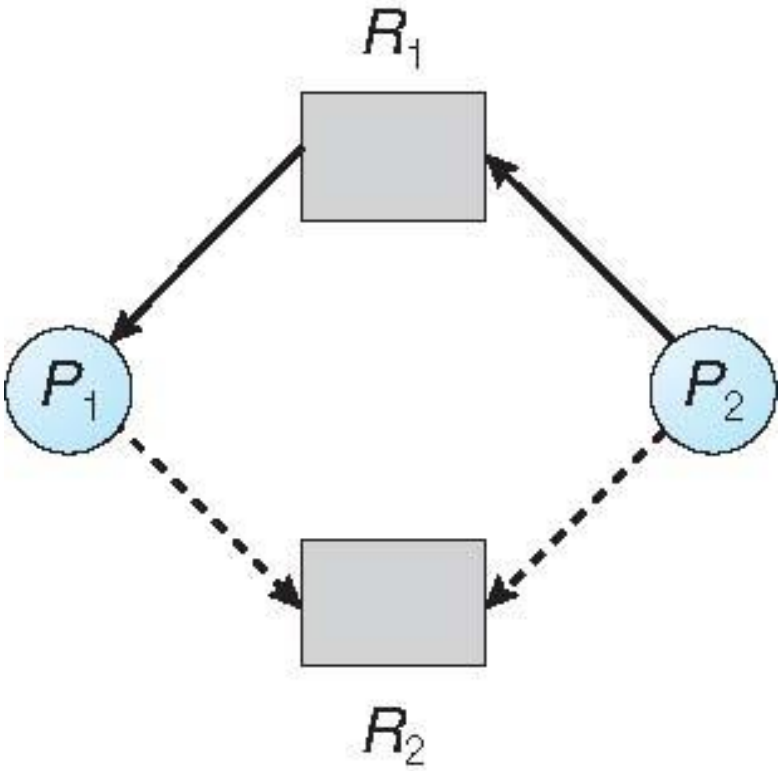

Unsafe State In Resource-Allocation Graph

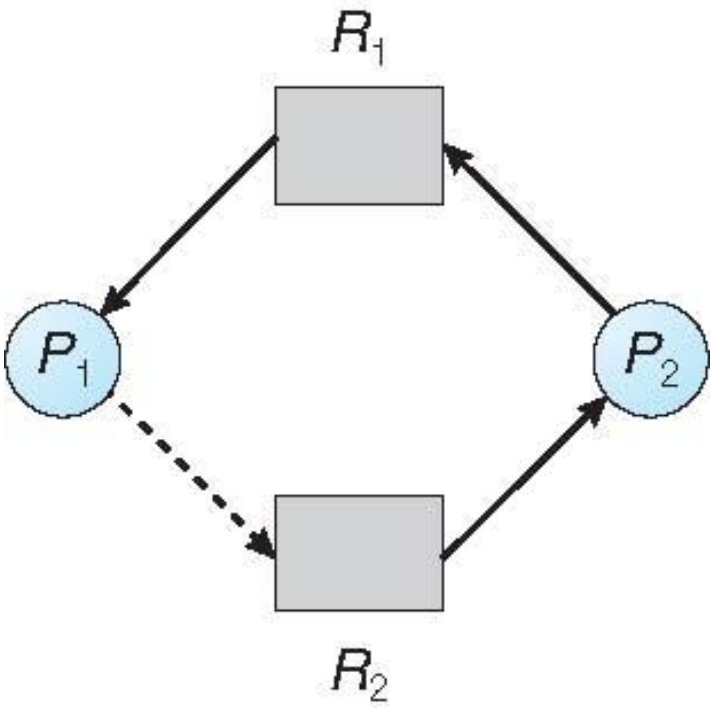

Resource-Allocation Graph Algorithm

Suppose that process P_i requests a resource R_j

The request can be granted only if converting the request edge to an assignment edge does not result in the formation of a cycle in the resource allocation graph

Banker's Algorithm

Multiple instances

Each process must a priori claim maximum use

When a process requests a resource it may have to wait

When a process gets all its resources it must return them in a finite amount of time

Data Structures for the Banker's Algorithm

Let n = number of processes, and m = number of resources types.

Available: Vector of length m. If available $[j] = k$, there are k instances of resource type R_j available

Max: $n \times m$ matrix. If $Max\,[i,j] = k$, then process P_i may request at most k instances of resource type R_j

Allocation: $n \times m$ matrix. If Allocation$[i,j] = k$ then P_i is currently allocated k instances of R_j

Need: $n \times m$ matrix. If $Need[i,j] = k$, then P_i may need k more instances of R_j to complete its task

$$Need\,[i,j] = Max[i,j] - Allocation\,[i,j]$$

Safety Algorithm

1. Let ***Work*** and ***Finish*** be vectors of length *m* and *n*, respectively. Initialize:

   Work = Available

   ***Finish* [*i*] = *false* for *i* = 0, 1, …, *n*- 1**

2. Find an ***i*** such that both:

   (a) ***Finish* [*i*] = *false***

   (b) $\boldsymbol{Need_i \leq Work}$

   If no such ***i*** exists, go to step 4

3. $\boldsymbol{Work = Work + Allocation_i}$
   Finish*[*i*] = *true
   go to step 2

4. If ***Finish* [*i*] == *true*** for all ***i***, then the system is in a safe state

Resource-Request Algorithm for Process P_i

$\boldsymbol{Request_i}$ = request vector for process $\boldsymbol{P_i}$. If $\boldsymbol{Request_i}$ **[*j*] = *k*** then process $\boldsymbol{P_i}$ wants ***k*** instances of resource type $\boldsymbol{R_j}$

1. If $\boldsymbol{Request_i \leq Need_i}$ go to step 2. Otherwise, raise error condition, since process has exceeded its maximum claim
2. If $\boldsymbol{Request_i \leq Available}$, go to step 3. Otherwise $\boldsymbol{P_i}$ must wait, since resources are not available
3. Pretend to allocate requested resources to $\boldsymbol{P_i}$ by modifying the state as follows:

$$\boldsymbol{Available = Available - Request_i;}$$

$$\boldsymbol{Allocation_i = Allocation_i + Request_i;}$$

$$\boldsymbol{Need_i = Need_i - Request_i;}$$

If safe $\Rightarrow$ the resources are allocated to $\boldsymbol{P_i}$

If unsafe $\Rightarrow$ $\boldsymbol{P_i}$ must wait, and the old resource-allocation state is restored

Example of Banker's Algorithm

5 processes P_0 through P_4;

3 resource types:

A (10 instances), *B* (5instances), and *C* (7 instances)

Snapshot at time T_0:

	Allocation	*Max*	*Available*
	A B C	*A B C*	*A B C*
P_0	0 1 0	7 5 3	3 3 2
P_1	2 0 0	3 2 2	
P_2	3 0 2	9 0 2	
P_3	2 1 1	2 2 2	
P_4	0 0 2	4 3 3	

Example (Cont.)

The content of the matrix ***Need*** is defined to be ***Max – Allocation***

	Need
	A B C
P_0	7 4 3
P_1	1 2 2
P_2	6 0 0
P_3	0 1 1
P_4	4 3 1

The system is in a safe state since the sequence < P_1, P_3, P_4, P_2, P_0> satisfies safety criteria

Example: P_1 Request (1,0,2)

Check that Request $\leq$ Available (that is, $(1,0,2) \leq (3,3,2) \Rightarrow$ true

	Allocation	*Need*	*Available*
	A B C	*A B C*	*A B C*
P_0	0 1 0	7 4 3	2 3 0
P_1	3 0 2	0 2 0	
P_2	3 0 2	6 0 0	
P_3	2 1 1	0 1 1	
P_4	0 0 2	4 3 1	

Executing safety algorithm shows that sequence < $\boldsymbol{P_1}$, $\boldsymbol{P_3}$, $\boldsymbol{P_4}$, $\boldsymbol{P_0}$, $\boldsymbol{P_2}$> satisfies safety requirement

Can request for (3,3,0) by $\boldsymbol{P_4}$ be granted?

Can request for (0,2,0) by $\boldsymbol{P_0}$ be granted?

Deadlock Detection

Allow system to enter deadlock state

Detection algorithm

Recovery scheme

Single Instance of Each Resource Type

Maintain **wait-for** graph

Nodes are processes

$P_i \rightarrow P_j$ if P_i is waiting for P_j

Periodically invoke an algorithm that searches for a cycle in the graph. If there is a cycle, there exists a deadlock

An algorithm to detect a cycle in a graph requires an order of n^2 operations, where n is the number of vertices in the graph

Resource-Allocation Graph and Wait-for Graph

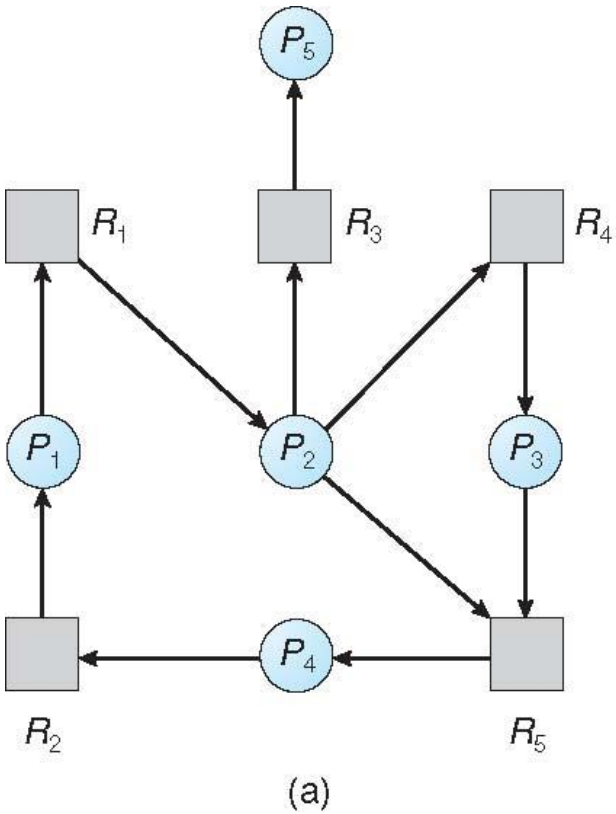

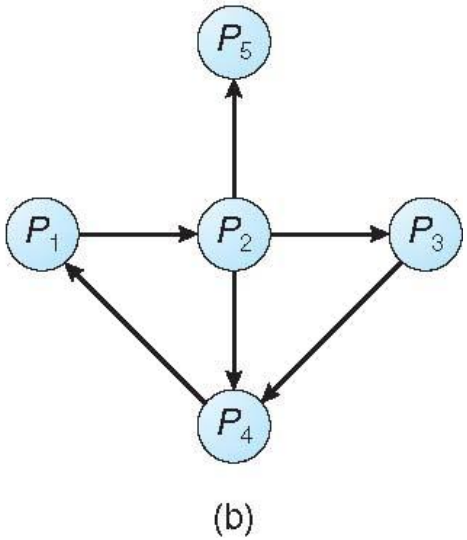

Resource-Allocation Graph

Corresponding wait-for graph

Several Instances of a Resource Type

Available*:* A vector of length ***m*** indicates the number of available resources of each type

Allocation*:* An ***n* x *m*** matrix defines the number of resources of each type currently allocated to each process

Request*:* An ***n* x *m*** matrix indicates the current request of each process. If ***Request* [*i*][*j*] = *k***, then process P_i is requesting ***k*** more instances of resource type R_j.

Detection Algorithm

1. Let ***Work*** and ***Finish*** be vectors of length ***m*** and ***n***, respectively Initialize:
   (a) ***Work = Available***
   (b) For ***i* = 1,2, …, *n***, if ***Allocation***$_i \neq$ **0**, then ***Finish*[i] = *false***; otherwise, ***Finish*[i] = *true***

2. Find an index ***i*** such that both:
   (a) ***Finish*[*i*] == *false***
   (b) ***Request***$_i \leq$ ***Work***

   If no such ***i*** exists, go to step 4

Detection Algorithm (Cont.)

3. ***Work* = *Work* + *Allocation*$_i$**
   Finish*[*i*] = *true
   go to step 2

4. If ***Finish[i]* == *false***, for some ***i***, $1 \leq i \leq n$, then the system is in deadlock state. Moreover, if ***Finish*[*i*] == *false***, then P_i is deadlocked

Algorithm requires an order of O(m x n^2) operations to detect whether the system is in deadlocked state

Example of Detection Algorithm

Five processes P_0 through P_4; three resource types A (7 instances), *B* (2 instances), and *C* (6 instances)

Snapshot at time T_0:

	Allocation	*Request*	*Available*
	A B C	*A B C*	*A B C*
P_0	0 1 0	0 0 0	0 0 0
P_1	2 0 0	2 0 2	
P_2	3 0 3	0 0 0	
P_3	2 1 1	1 0 0	
P_4	0 0 2	0 0 2	

Sequence <P_0, P_2, P_3, P_1, P_4> will result in ***Finish[i] = true*** for all ***i***

Example (Cont.)

P_2 requests an additional instance of type C

	Request
	A B C
P_0	0 0 0
P_1	2 0 2
P_2	0 0 1
P_3	1 0 0
P_4	0 0 2

State of system?

- Can reclaim resources held by process P_0, but insufficient resources to fulfill other processes; requests
- Deadlock exists, consisting of processes P_1, P_2, P_3, and P_4

Detection-Algorithm Usage

When, and how often, to invoke depends on:

How often a deadlock is likely to occur?

How many processes will need to be rolled back?

- one for each disjoint cycle

If detection algorithm is invoked arbitrarily, there may be many cycles in the resource graph and so we would not be able to tell which of the many deadlocked processes “caused” the deadlock.

Recovery from Deadlock: Process Termination

Abort all deadlocked processes

Abort one process at a time until the deadlock cycle is eliminated

In which order should we choose to abort?

1. Priority of the process
2. How long process has computed, and how much longer to completion
3. Resources the process has used
4. Resources process needs to complete
5. How many processes will need to be terminated
6. Is process interactive or batch?

Recovery from Deadlock: Resource Preemption

Selecting a victim – minimize cost

Rollback – return to some safe state, restart process for that state

Starvation – same process may always be picked as victim, include number of rollback in cost factor

End of Chapter 8

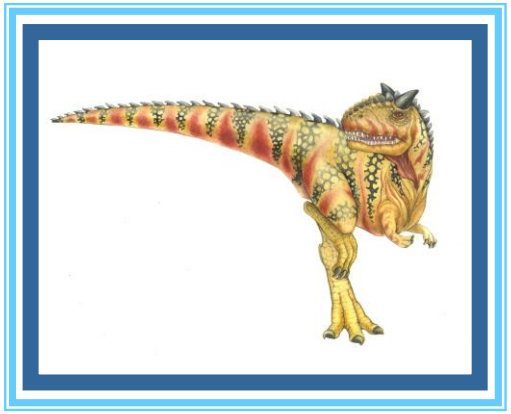

Silberschatz, Galvin and Gagne ©2018