Chapter 12: I/O Systems

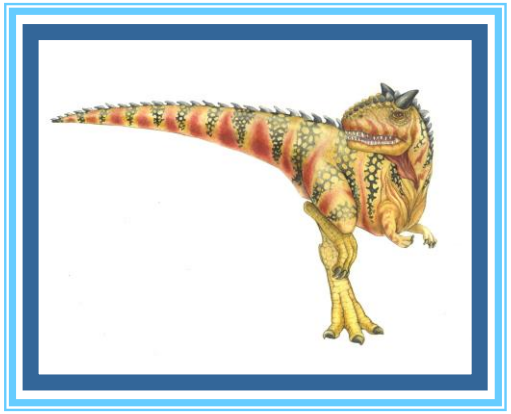

Silberschatz, Galvin and Gagne ©2018

Chapter 12: I/O Systems

Overview

I/O Hardware

Application I/O Interface

Kernel I/O Subsystem

Transforming I/O Requests to Hardware Operations

STREAMS

Performance

Objectives

Explore the structure of an operating system's I/O subsystem

Discuss the principles of I/O hardware and its complexity

Provide details of the performance aspects of I/O hardware and software

Overview

- I/O management is a major component of operating system design and operation
  - Important aspect of computer operation
  - I/O devices vary greatly
  - Various methods to control them
  - Performance management
  - New types of devices frequent
- Ports, busses, device controllers connect to various devices
- **Device drivers** encapsulate device details
  - Present uniform device-access interface to I/O subsystem

I/O Hardware

- Incredible variety of I/O devices
  - Storage
  - Transmission
  - Human-interface
- Common concepts – signals from I/O devices interface with computer
  - **Port** – connection point for device
  - **Bus** - **daisy chain** or shared direct access
    - **PCI** bus common in PCs and servers, PCI Express (**PCIe**)
    - **expansion bus** connects relatively slow devices
  - **Controller** (**host adapter**) – electronics that operate port, bus, device
    - Sometimes integrated
    - Sometimes separate circuit board (host adapter)
    - Contains processor, microcode, private memory, bus controller, etc
      - Some talk to per-device controller with bus controller, microcode, memory, etc

A Typical PC Bus Structure

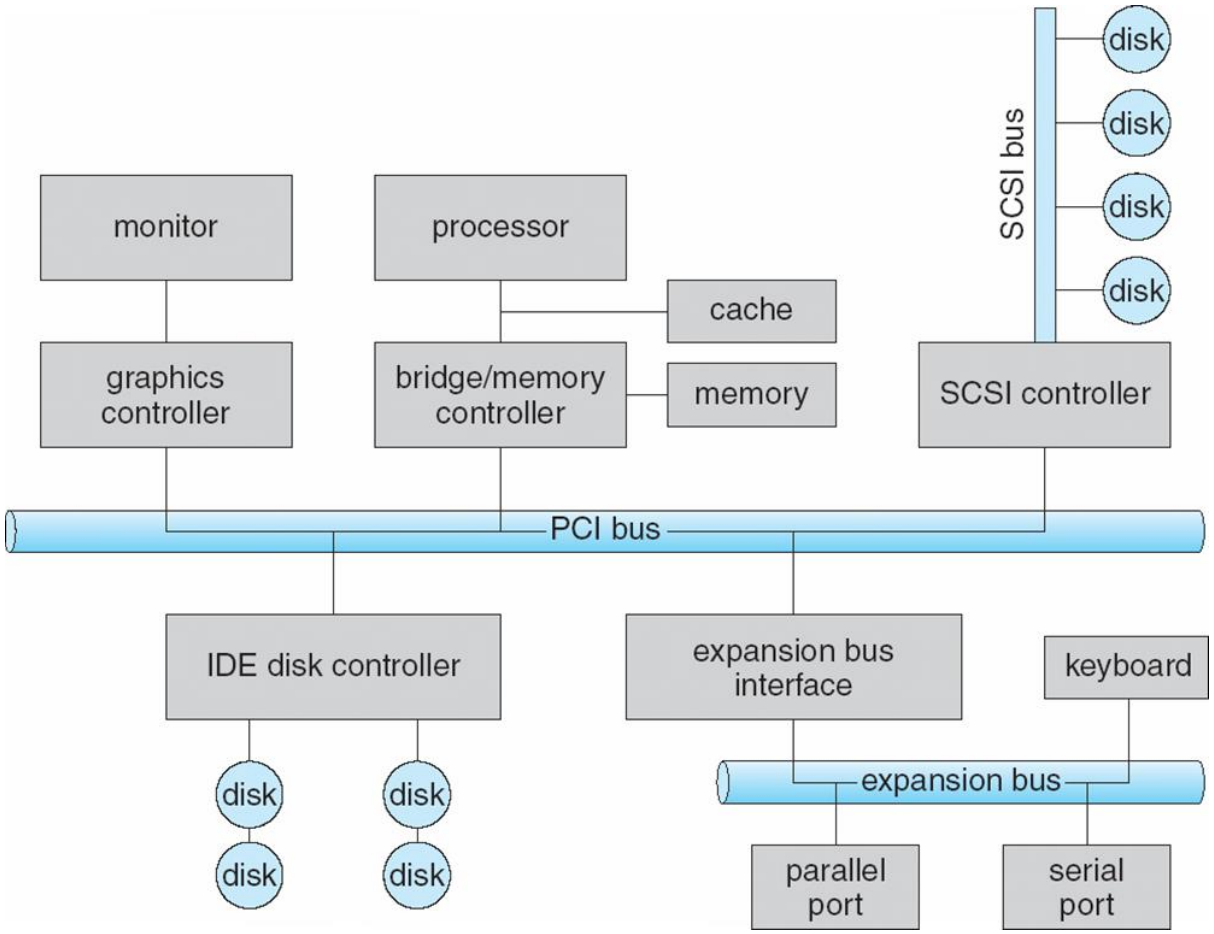

I/O Hardware (Cont.)

- I/O instructions control devices
- Devices usually have registers where device driver places commands, addresses, and data to write, or read data from registers after command execution
  - Data-in register, data-out register, status register, control register
  - Typically 1-4 bytes, or FIFO buffer
- Devices have addresses, used by
  - Direct I/O instructions
  - **Memory-mapped I/O**
    - Device data and command registers mapped to processor address space
    - Especially for large address spaces (graphics)

Device I/O Port Locations on PCs (partial)

I/O address range (hexadecimal)	device
000–00F	DMA controller
020–021	interrupt controller
040–043	timer
200–20F	game controller
2F8–2FF	serial port (secondary)
320–32F	hard-disk controller
378–37F	parallel port
3D0–3DF	graphics controller
3F0–3F7	diskette-drive controller
3F8–3FF	serial port (primary)

Polling

For each byte of I/O

1. Read busy bit from status register until 0
2. Host sets read or write bit and if write copies data into data-out register
3. Host sets command-ready bit
4. Controller sets busy bit, executes transfer
5. Controller clears busy bit, error bit, command-ready bit when transfer done

Step 1 is **busy-wait** cycle to wait for I/O from device

Reasonable if device is fast

But inefficient if device slow

CPU switches to other tasks?

- But if miss a cycle data overwritten / lost

Interrupts

- Polling can happen in 3 instruction cycles
  - Read status, logical-and to extract status bit, branch if not zero
  - How to be more efficient if non-zero infrequently?
- CPU **Interrupt-request line** triggered by I/O device
  - Checked by processor after each instruction
- **Interrupt handler** receives interrupts
  - **Maskable** to ignore or delay some interrupts
- **Interrupt vector** to dispatch interrupt to correct handler
  - Context switch at start and end
  - Based on priority
  - Some **nonmaskable**
  - Interrupt chaining if more than one device at same interrupt number

Interrupt-Driven I/O Cycle

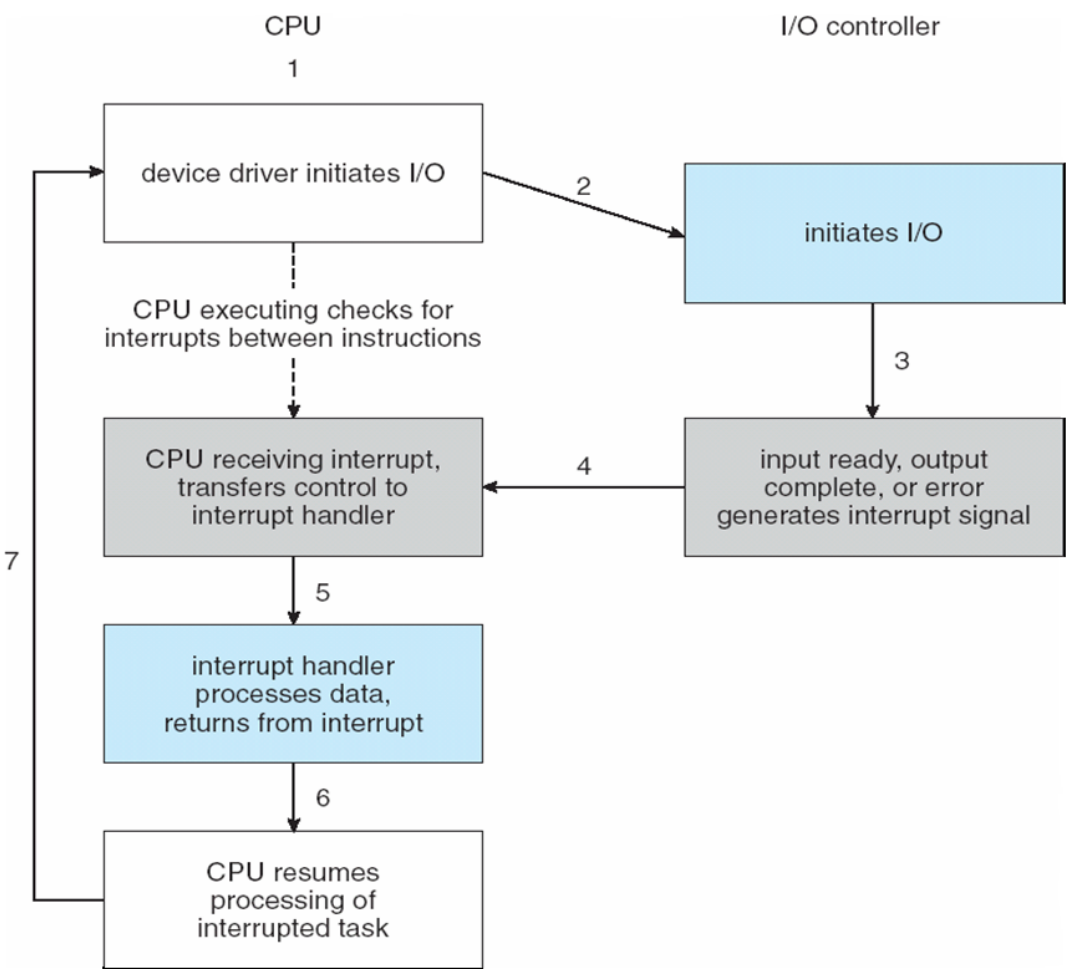

Intel Pentium Processor Event-Vector Table

vector number	description
0	divide error
1	debug exception
2	null interrupt
3	breakpoint
4	INTO-detected overflow
5	bound range exception
6	invalid opcode
7	device not available
8	double fault
9	coprocessor segment overrun (reserved)
10	invalid task state segment
11	segment not present
12	stack fault
13	general protection
14	page fault
15	(Intel reserved, do not use)
16	floating-point error
17	alignment check
18	machine check
19–31	(Intel reserved, do not use)
32–255	maskable interrupts

Interrupts (Cont.)

- Interrupt mechanism also used for **exceptions**
  - Terminate process, crash system due to hardware error
- Page fault executes when memory access error
- System call executes via **trap** to trigger kernel to execute request
- Multi-CPU systems can process interrupts concurrently
  - If operating system designed to handle it
- Used for time-sensitive processing, frequent, must be fast

Direct Memory Access

Used to avoid **programmed I/O** (one byte at a time) for large data movement

Requires **DMA** controller

Bypasses CPU to transfer data directly between I/O device and memory

OS writes DMA command block into memory

- Source and destination addresses
- Read or write mode
- Count of bytes
- Writes location of command block to DMA controller
- Bus mastering of DMA controller – grabs bus from CPU
  - **Cycle stealing** from CPU but still much more efficient
- When done, interrupts to signal completion

Version that is aware of virtual addresses can be even more efficient - **DVMA**

Six Step Process to Perform DMA Transfer

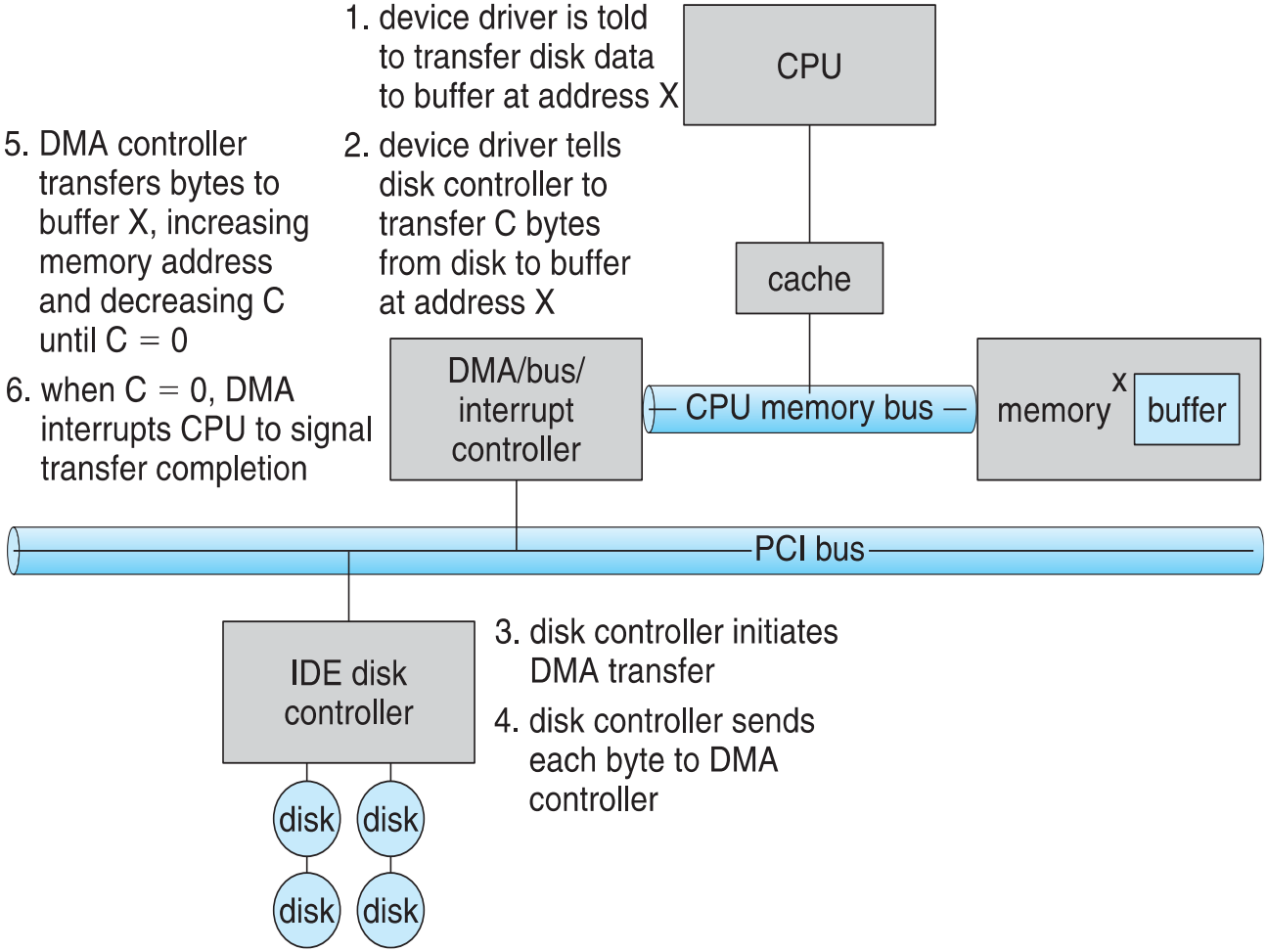

Application I/O Interface

- I/O system calls encapsulate device behaviors in generic classes
- Device-driver layer hides differences among I/O controllers from kernel
- New devices talking already-implemented protocols need no extra work
- Each OS has its own I/O subsystem structures and device driver frameworks
- Devices vary in many dimensions
  - **Character-stream** or **block**
  - **Sequential** or **random-access**
  - **Synchronous** or **asynchronous** (or both)
  - **Sharable** or **dedicated**
  - **Speed of operation**
  - **read-write**, **read only**, or **write only**

A Kernel I/O Structure

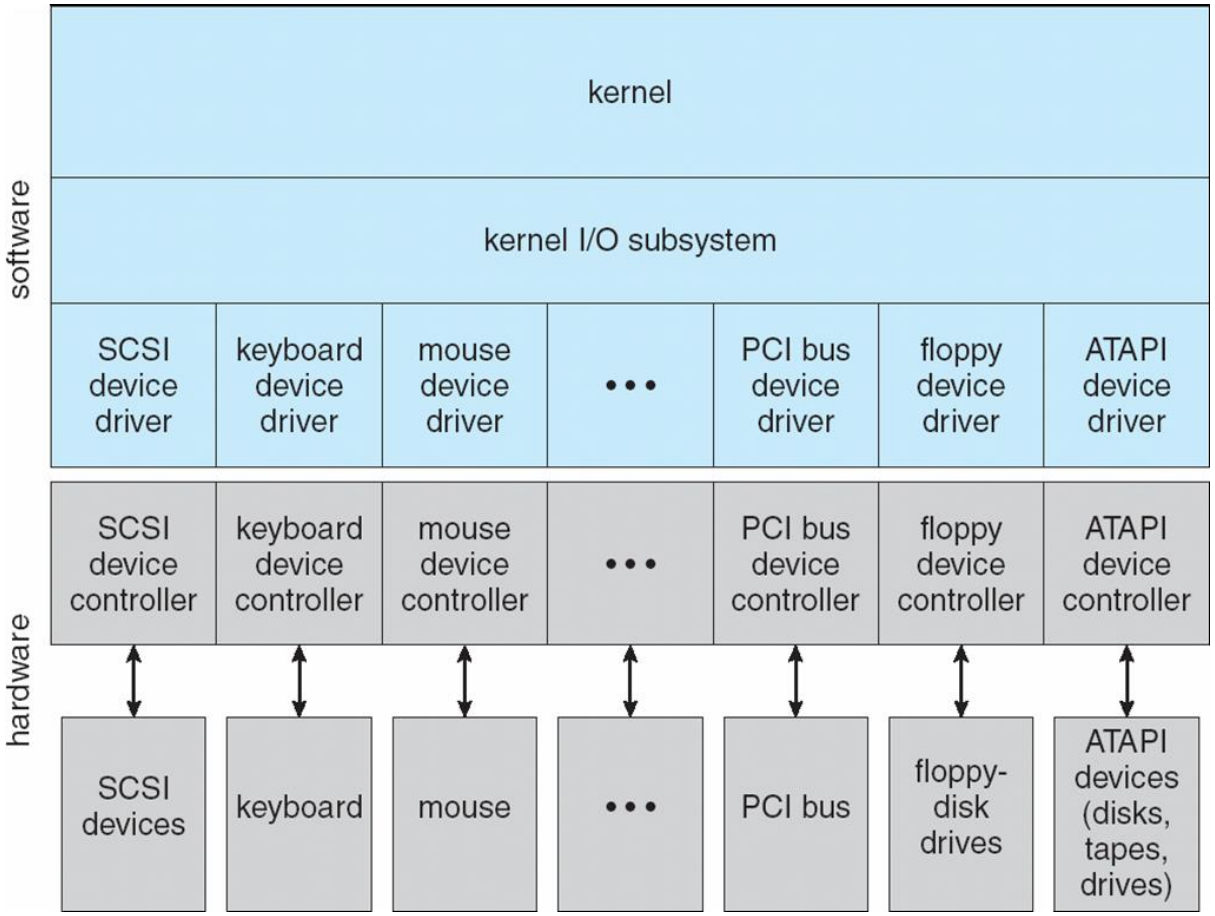

Characteristics of I/O Devices

aspect	variation	example
data-transfer mode	character block	terminal disk
access method	sequential random	modem CD-ROM
transfer schedule	synchronous asynchronous	tape keyboard
sharing	dedicated sharable	tape keyboard
device speed	latency seek time transfer rate delay between operations	
I/O direction	read only write only read–write	CD-ROM graphics controller disk

Characteristics of I/O Devices (Cont.)

- Subtleties of devices handled by device drivers
- Broadly I/O devices can be grouped by the OS into
  - Block I/O
  - Character I/O (Stream)
  - Memory-mapped file access
  - Network sockets
- For direct manipulation of I/O device specific characteristics, usually an escape / back door
  - Unix **`ioctl()`** call to send arbitrary bits to a device control register and data to device data register

Block and Character Devices

- Block devices include disk drives
  - Commands include read, write, seek
  - **Raw I/O**, **direct I/O**, or file-system access
  - Memory-mapped file access possible
    - File mapped to virtual memory and clusters brought via demand paging
  - DMA
- Character devices include keyboards, mice, serial ports
  - Commands include **`get(), put()`**
  - Libraries layered on top allow line editing

Network Devices

- Varying enough from block and character to have own interface
- Linux, Unix, Windows and many others include **socket** interface
  - Separates network protocol from network operation
  - Includes **`select()`** functionality
- Approaches vary widely (pipes, FIFOs, streams, queues, mailboxes)

Clocks and Timers

Provide current time, elapsed time, timer

Normal resolution about 1/60 second

Some systems provide higher-resolution timers

Programmable interval timer used for timings, periodic interrupts

`ioctl()` (on UNIX) covers odd aspects of I/O such as clocks and timers

Nonblocking and Asynchronous I/O

Blocking - process suspended until I/O completed

- Easy to use and understand
- Insufficient for some needs

Nonblocking - I/O call returns as much as available

- User interface, data copy (buffered I/O)
- Implemented via multi-threading
- Returns quickly with count of bytes read or written
- **`select()`** to find if data ready then **`read()`** or **`write()`** to transfer

Asynchronous - process runs while I/O executes

- Difficult to use
- I/O subsystem signals process when I/O completed

Two I/O Methods

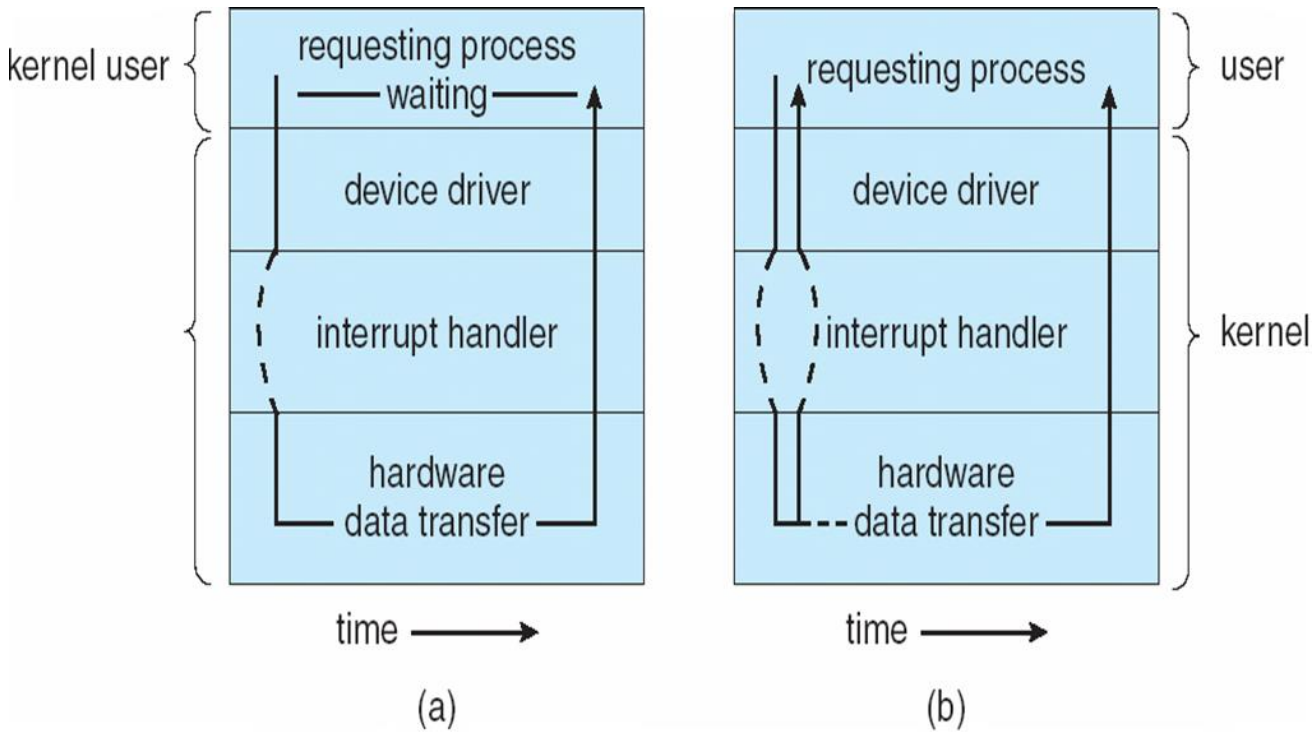

Synchronous

Asynchronous

Vectored I/O

Vectored I/O allows one system call to perform multiple I/O operations

For example, Unix **`readve()`** accepts a vector of multiple buffers to read into or write from

This scatter-gather method better than multiple individual I/O calls

- Decreases context switching and system call overhead
- Some versions provide atomicity
  - Avoid for example worry about multiple threads changing data as reads / writes occurring

Kernel I/O Subsystem

Scheduling

- Some I/O request ordering via per-device queue
- Some OSs try fairness
- Some implement Quality Of Service (i.e. IPQOS)

Buffering - store data in memory while transferring between devices

- To cope with device speed mismatch
- To cope with device transfer size mismatch
- To maintain "copy semantics"
- **Double buffering** – two copies of the data
  - Kernel and user
  - Varying sizes
  - Full / being processed and not-full / being used
  - Copy-on-write can be used for efficiency in some cases

Device-status Table

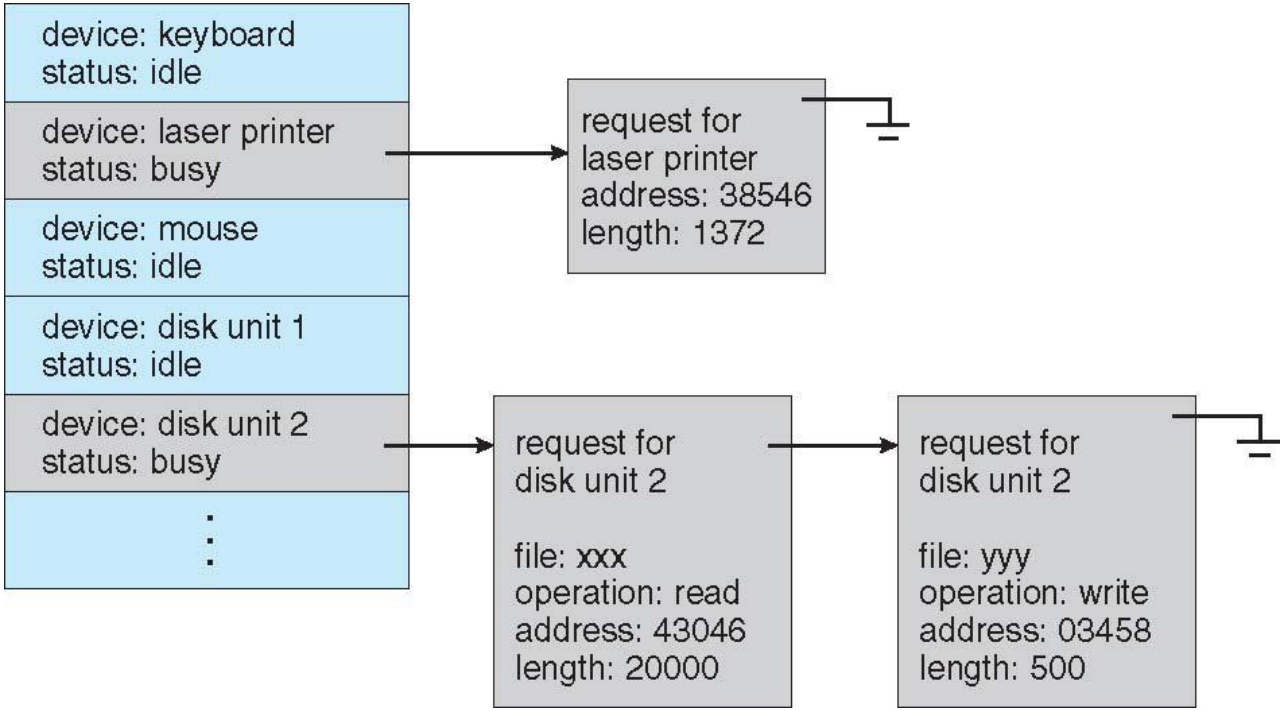

Sun Enterprise 6000 Device-Transfer Rates

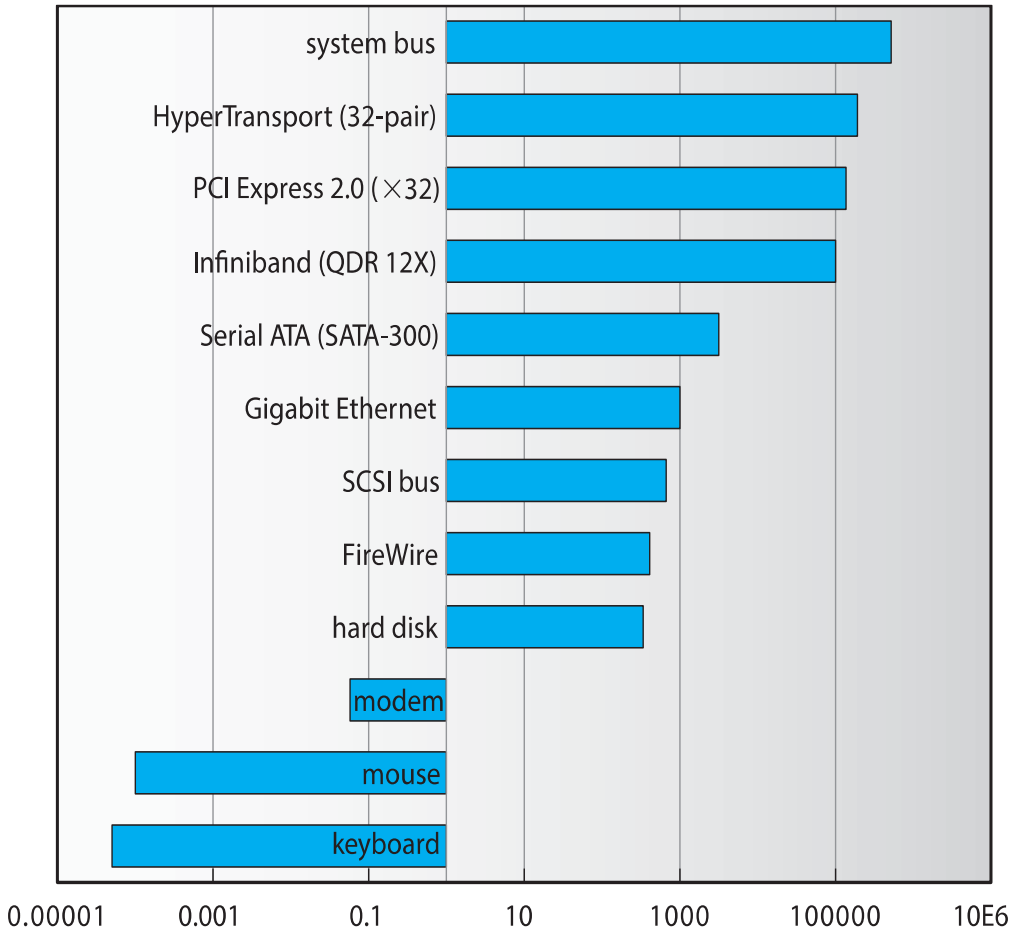

Kernel I/O Subsystem

Caching - faster device holding copy of data

- Always just a copy
- Key to performance
- Sometimes combined with buffering

Spooling - hold output for a device

- If device can serve only one request at a time
- i.e., Printing

Device reservation - provides exclusive access to a device

- System calls for allocation and de-allocation
- Watch out for deadlock

Error Handling

OS can recover from disk read, device unavailable, transient write failures

Retry a read or write, for example

Some systems more advanced – Solaris FMA, AIX

- Track error frequencies, stop using device with increasing frequency of retry-able errors

Most return an error number or code when I/O request fails

System error logs hold problem reports

I/O Protection

User process may accidentally or purposefully attempt to disrupt normal operation via illegal I/O instructions

- All I/O instructions defined to be privileged
- I/O must be performed via system calls
  - Memory-mapped and I/O port memory locations must be protected too

Use of a System Call to Perform I/O

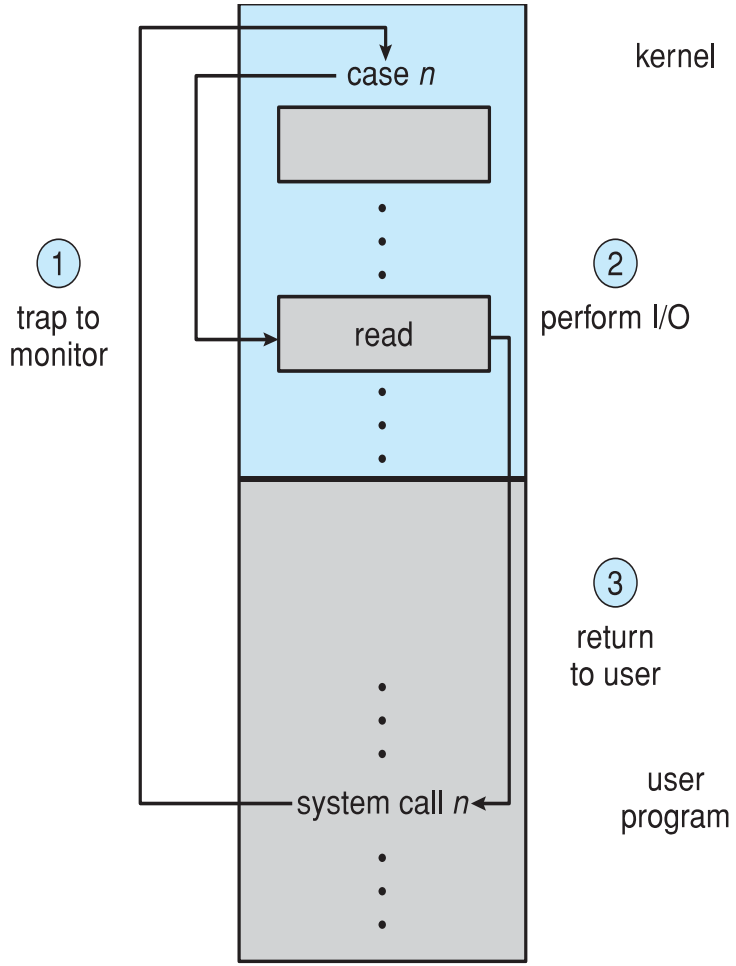

Kernel Data Structures

Kernel keeps state info for I/O components, including open file tables, network connections, character device state

Many, many complex data structures to track buffers, memory allocation, “dirty” blocks

Some use object-oriented methods and message passing to implement I/O

Windows uses message passing

- Message with I/O information passed from user mode into kernel
- Message modified as it flows through to device driver and back to process
- Pros / cons?

UNIX I/O Kernel Structure

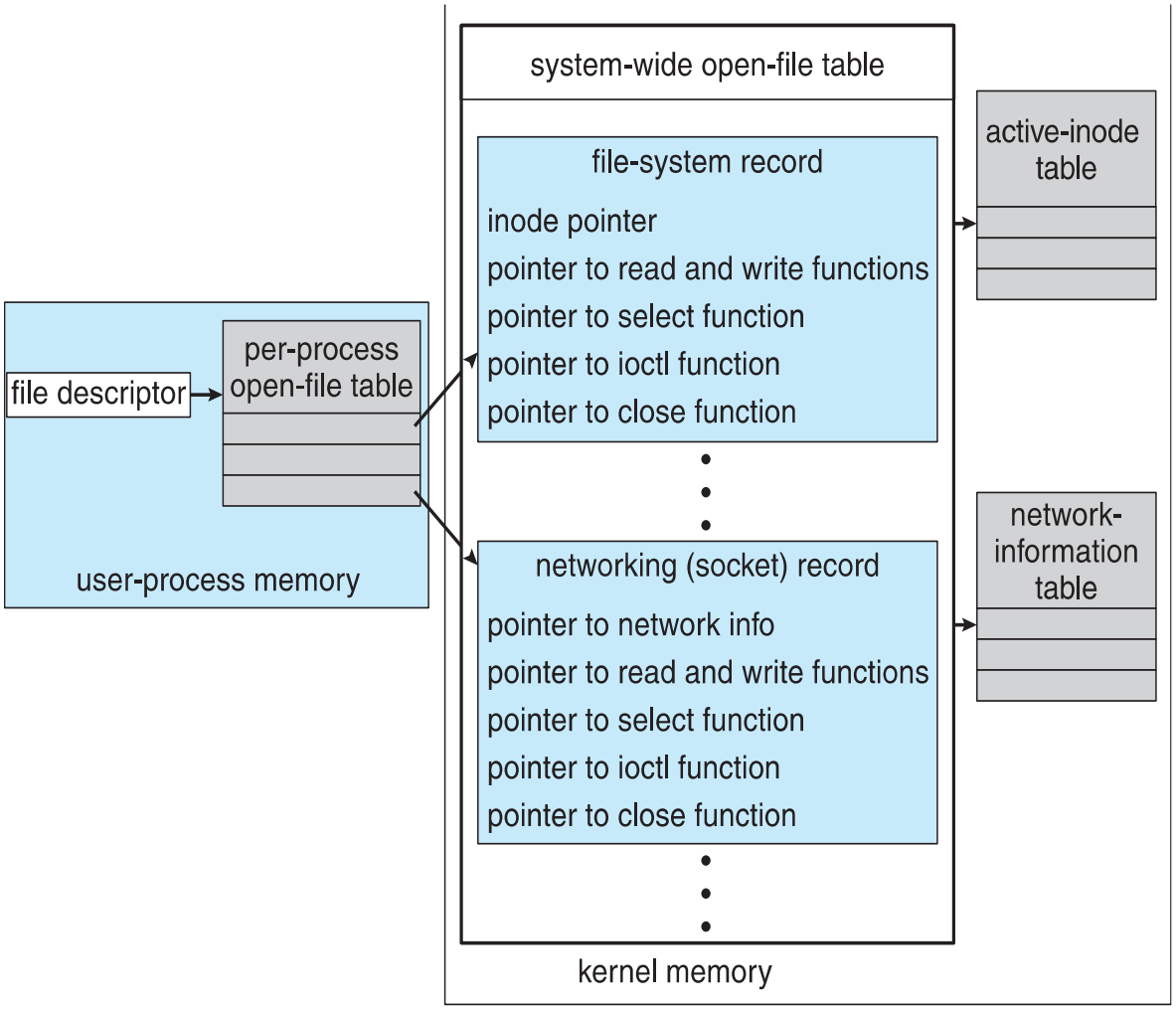

Power Management

- Not strictly domain of I/O, but much is I/O related
- Computers and devices use electricity, generate heat, frequently require cooling
- OSes can help manage and improve use
  - Cloud computing environments move virtual machines between servers
    - Can end up evacuating whole systems and shutting them down
- Mobile computing has power management as first class OS aspect

Power Management (Cont.)

For example, Android implements

Component-level power management

- Understands relationship between components
- Build device tree representing physical device topology
- System bus -> I/O subsystem -> {flash, USB storage}
- Device driver tracks state of device, whether in use
- Unused component – turn it off
- All devices in tree branch unused – turn off branch

Wake locks – like other locks but prevent sleep of device when lock is held

Power collapse – put a device into very deep sleep

- Marginal power use
- Only awake enough to respond to external stimuli (button press, incoming call)

I/O Requests to Hardware Operations

Consider reading a file from disk for a process:

- Determine device holding file
- Translate name to device representation
- Physically read data from disk into buffer
- Make data available to requesting process
- Return control to process

Life Cycle of An I/O Request

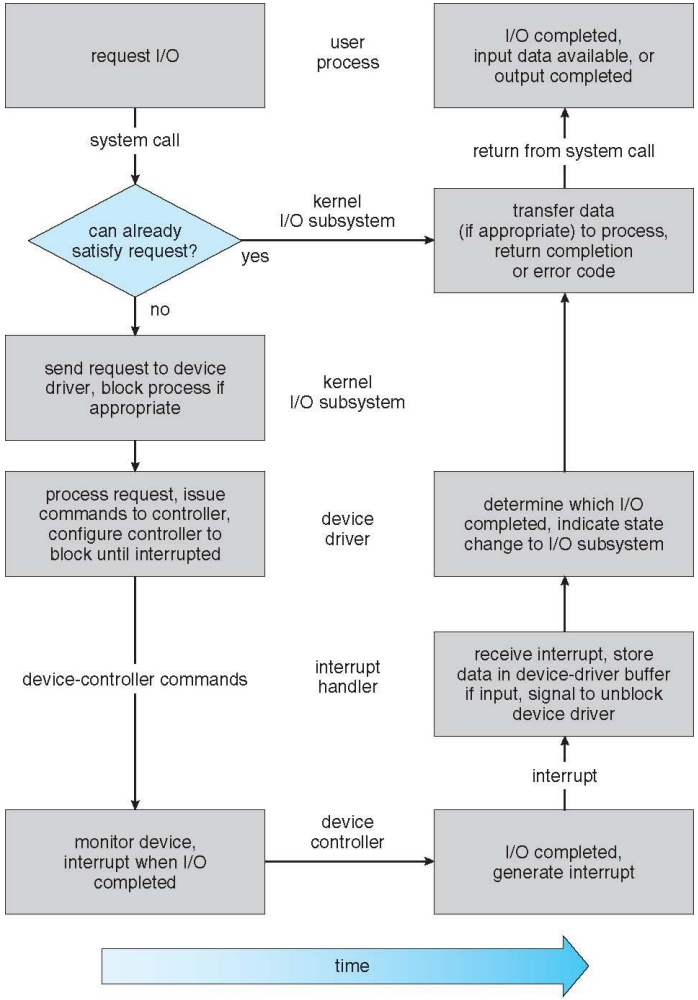

STREAMS

STREAM – a full-duplex communication channel between a user-level process and a device in Unix System V and beyond

A STREAM consists of:

- STREAM head interfaces with the user process
- driver end interfaces with the device
- zero or more STREAM modules between them

Each module contains a **read queue** and a **write queue**

Message passing is used to communicate between queues

- **Flow control** option to indicate available or busy

Asynchronous internally, synchronous where user process communicates with stream head

The STREAMS Structure

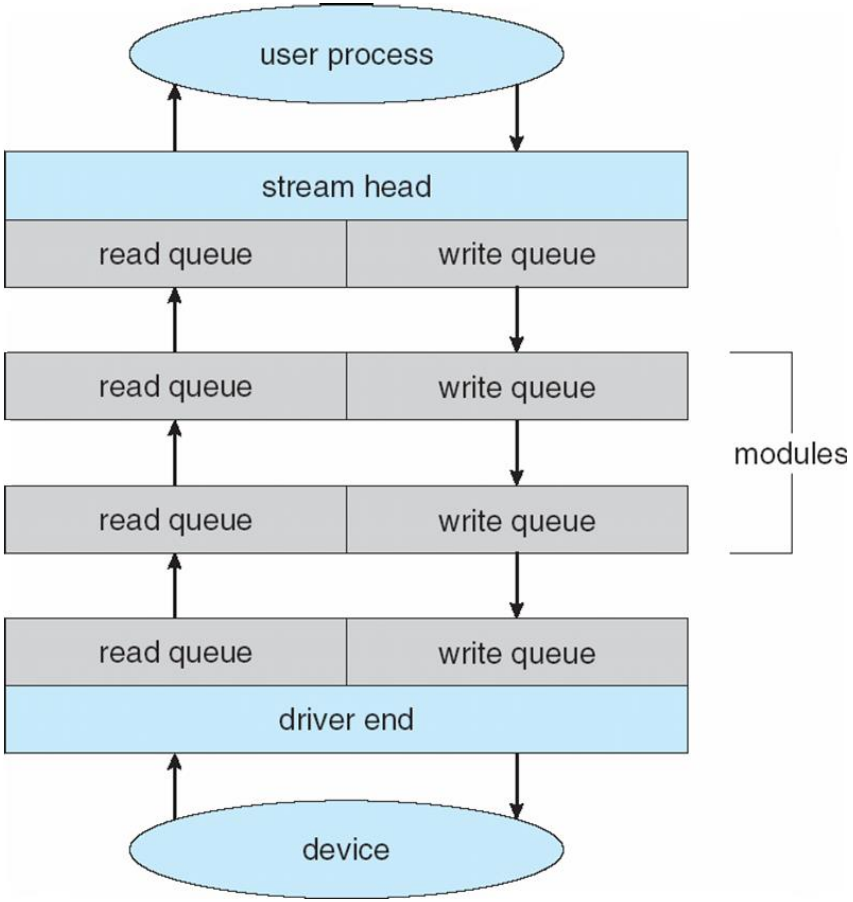

Performance

I/O a major factor in system performance:

- Demands CPU to execute device driver, kernel I/O code
- Context switches due to interrupts
- Data copying
- Network traffic especially stressful

Intercomputer Communications

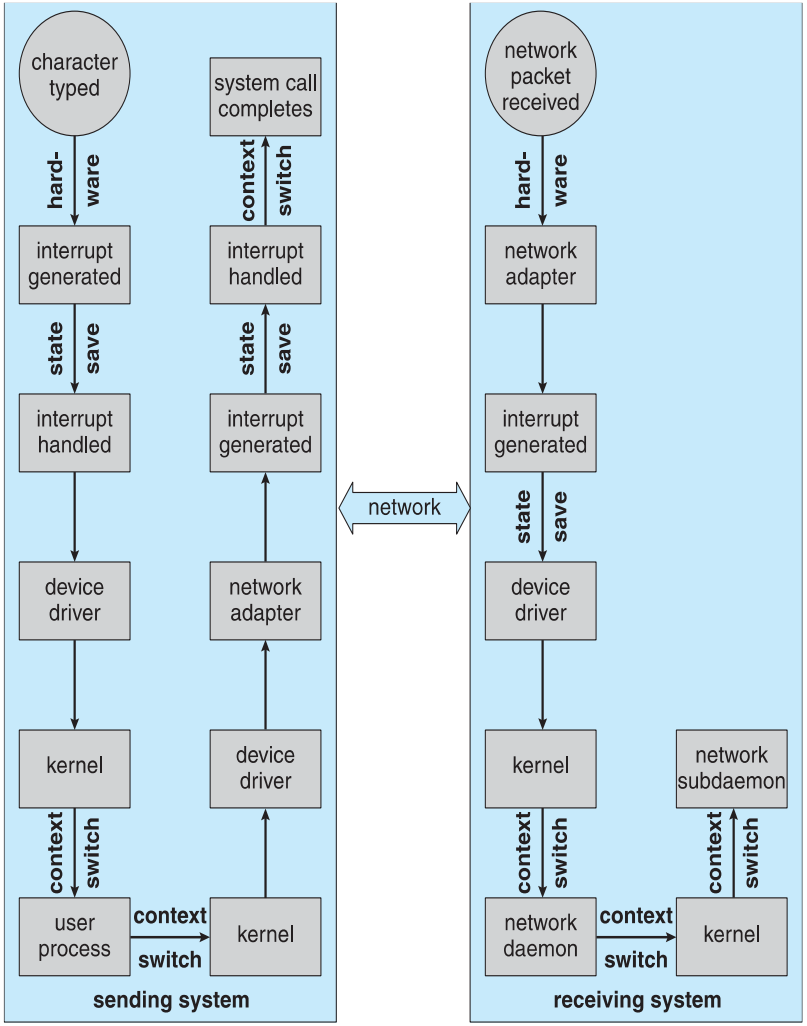

Improving Performance

- Reduce number of context switches
- Reduce data copying
- Reduce interrupts by using large transfers, smart controllers, polling
- Use DMA
- Use smarter hardware devices
- Balance CPU, memory, bus, and I/O performance for highest throughput
- Move user-mode processes / daemons to kernel threads

Device-Functionality Progression

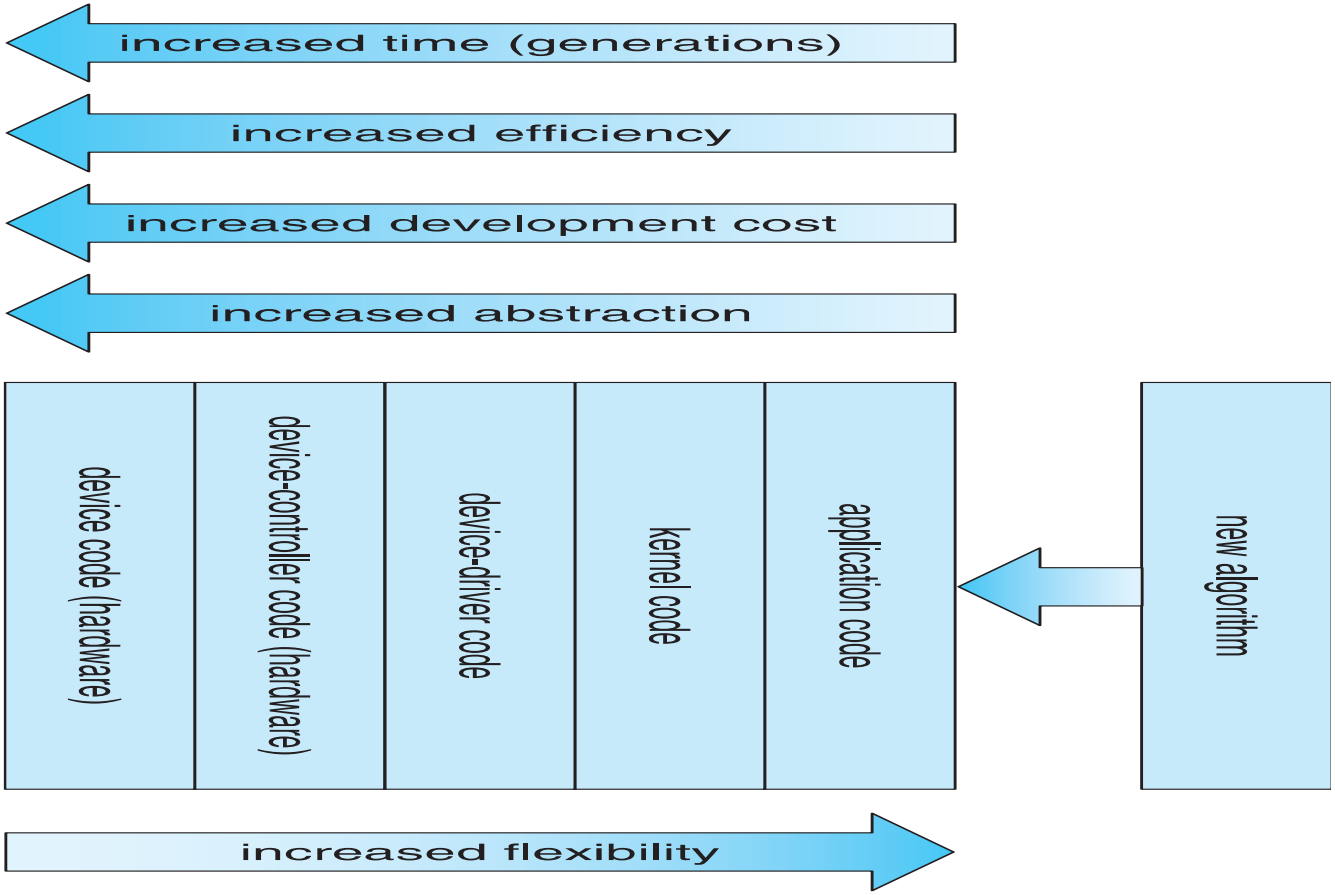

End of Chapter 12

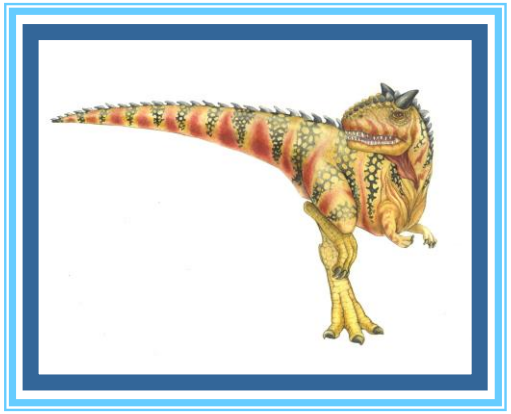

Silberschatz, Galvin and Gagne ©2018