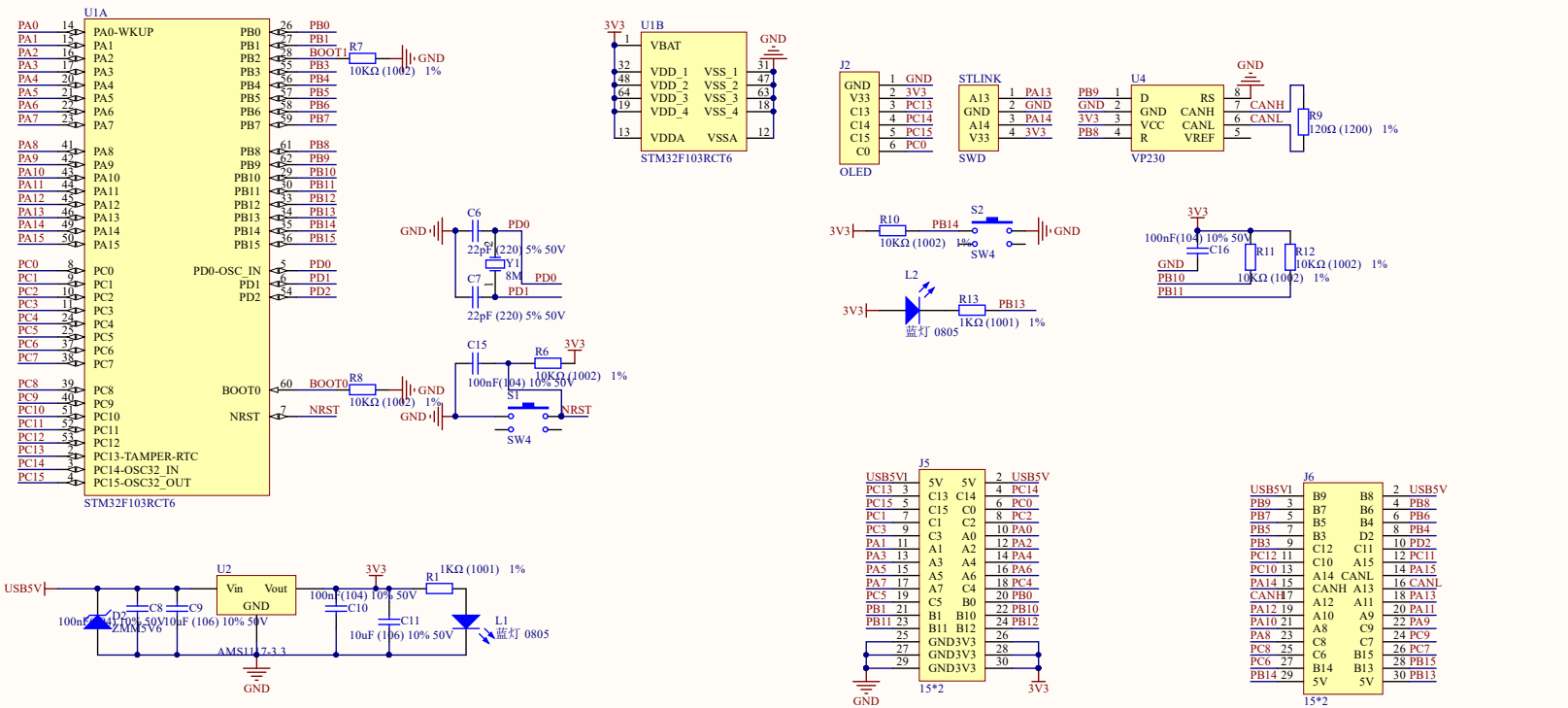

Title		
Size A3	Number	Revision
Date: 2019-04-28	Sheet of	
File: D:\stm32\stm32core\stm32core.SchDoc	Drawn By:	