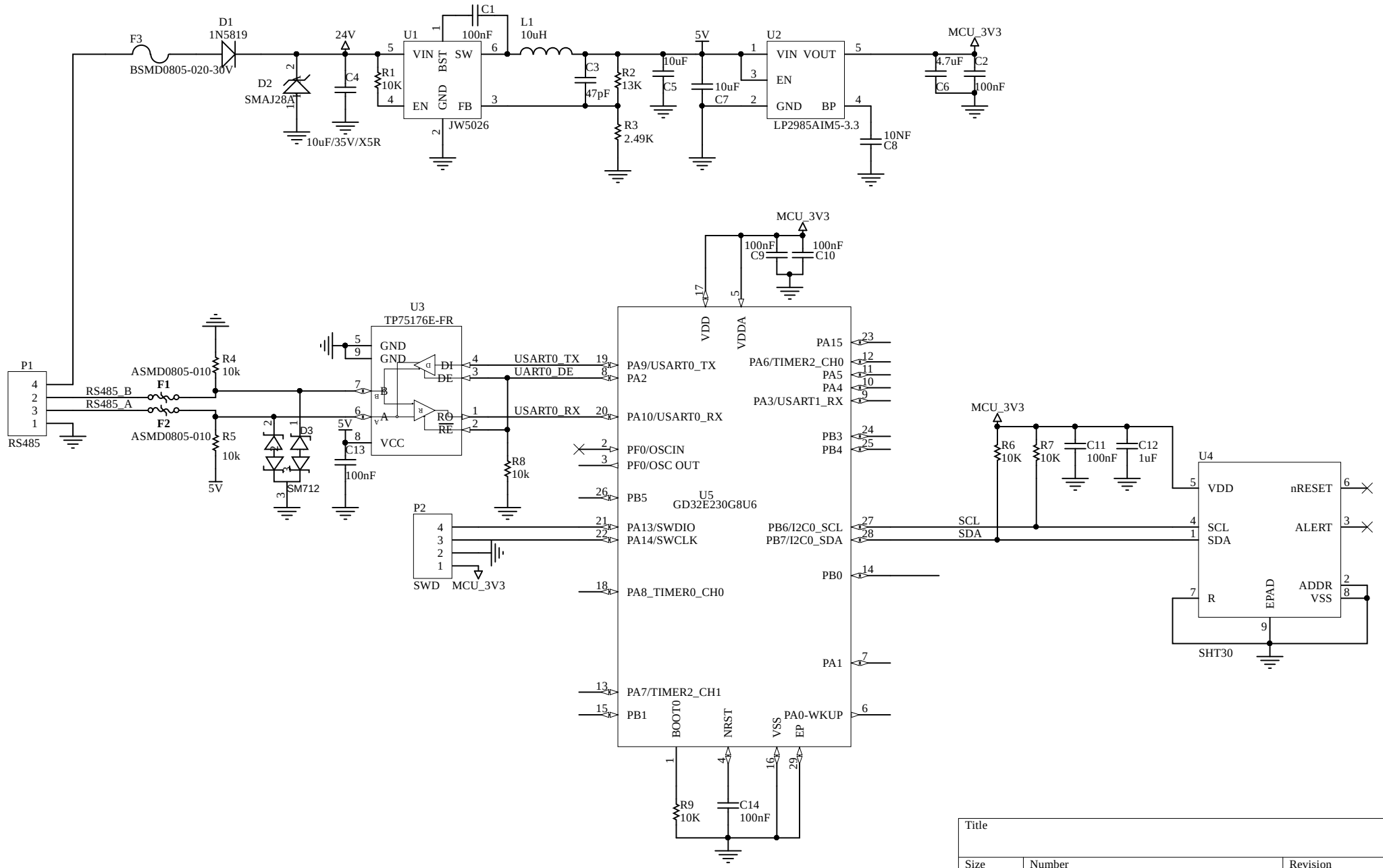

Title		
Size A4	Number	Revision
Date: 2021/7/13	Sheet of	
File: E:\温湿度传感器 GD32E230\..\温湿度传感器.SchDoc	Drawn By:	