L1: PA7 (in)
L2: PA11 (in)

REMOTE.R: PB7 (I2C1_SDA / USART0_RX)
REMOTE.T: PB6 (I2C1_SCL / USART0_TX)

V_BATT: PA4 (analog)
CURRENT_DC: PA6 (analog)
EMERGENCY_OFF: PB12 (in) TIM0_Break_Input Current Measure
CHARGE_STATE: PF0 (in, pullup)

unused: PB4, PB5, PA6

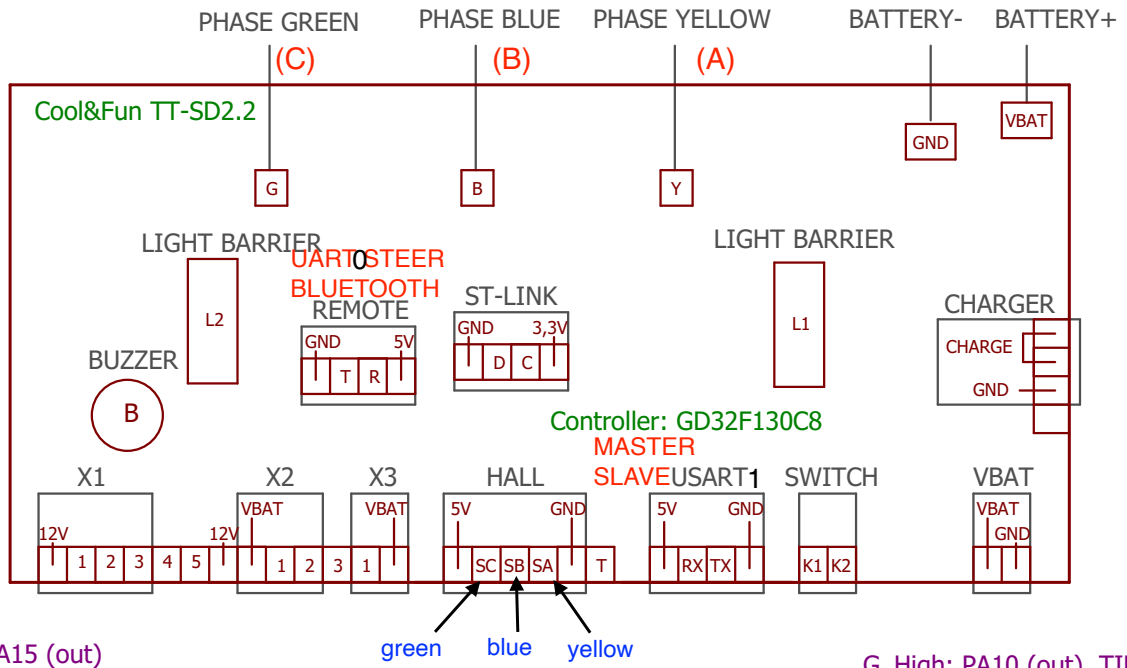

MPU6050.SDA: PB9 (I2C2)
MPU6050.SCL: PB8 (I2C2)

LED X1.1: PA15 (out)
LED X1.2: PA12 (out)
LED X1.3: ~~PB13~~ (out) PB-3
X1.4: N/A (PB4)
X1.5: N/A (PB5)

UPPER LED X2.1: PA1 (out)
LOWER LED X2.2: PA0 (out)
X2.3: N/A (connected with X3.1)

X3.1: PC13 (out)

X4.SC: PC14 (in)
X4.SB: PF1 (in)
X4.SA: PB11 (in)

X5.RX: PA3 (in, USART1)
X5.TX: PA2 (out, USART1)

BUZZER.B: PB10 (out)
SWITCH.K1: PC15 (in)
SELF_HOLD_LATCH: PB2 (out)

G_High: PA10 (out) TIM0_CH3
G_Low : PB15 (out) TIM0_CH3N
B_High: PA9 (out) TIM0_CH2
B_Low : PB14 (out) TIM0_CH2N
Y_High: PA8 (out) TIM0_CH1
Y_Low : PB13 (out) TIM0_CH1N

© Copyright Florian Stäblein 2018
HoverBoard_CoolAndFun
21.06.2018 19:05
Sheet: 1/2

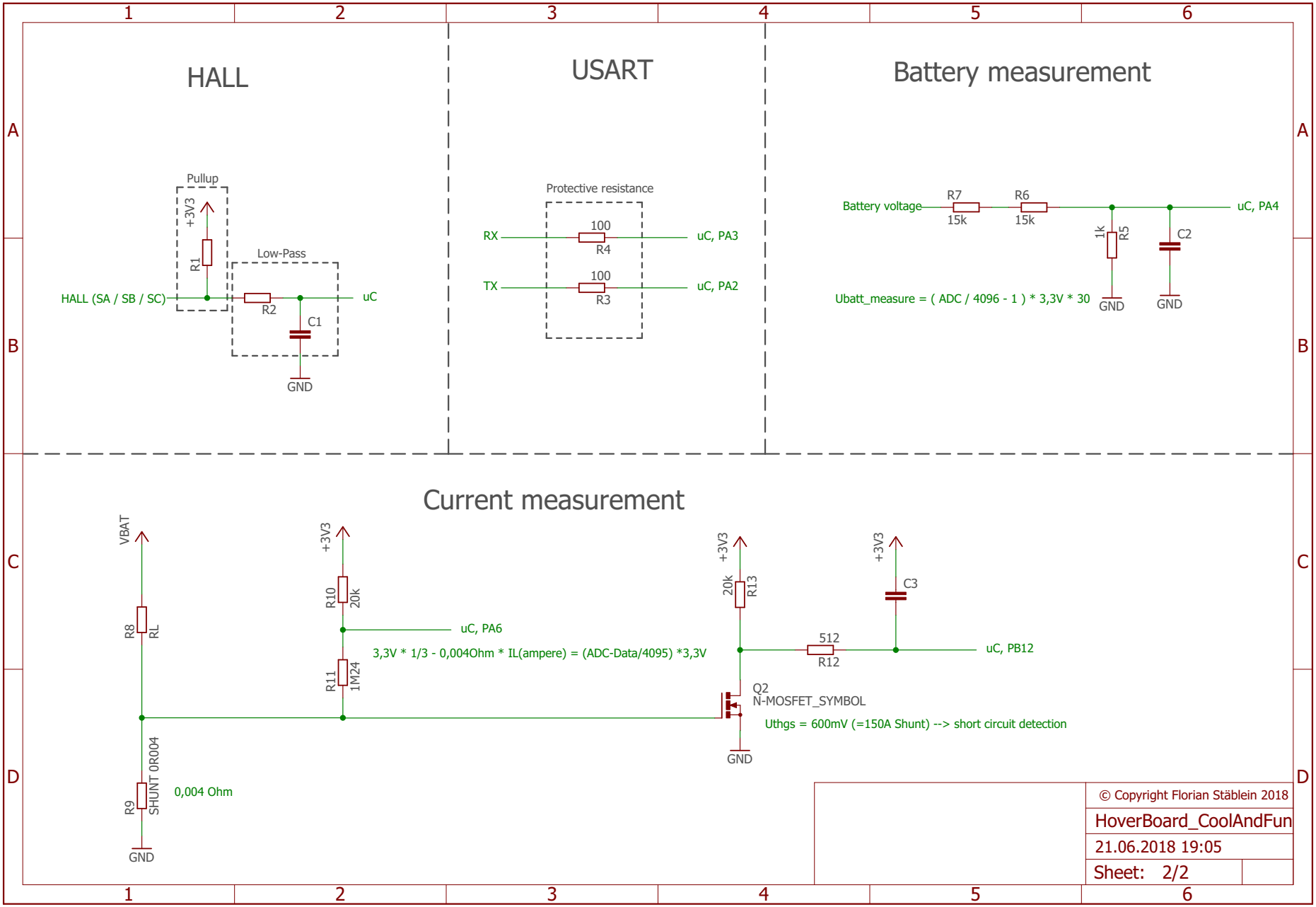
HALL
Pullup
+3V3
R1
Low-Pass
HALL (SA / SB / SC)
R2
C1
uC
GND
USART
Protective resistance
RX
100
R4
uC, PA3
TX
100
R3
uC, PA2
Battery measurement
Battery voltage
R7
15k
R6
15k
uC, PA4
1k
R5
C2
Ubatt_measure = (ADC / 4096 - 1) * 3,3V * 30
GND
GND
Current measurement
VBAT
R8
RL
R9
SHUNT 0R004
0,004 Ohm
GND
+3V3
R10
20k
uC, PA6
R11
1M24
3,3V * 1/3 - 0,004Ohm * IL(ampere) = (ADC-Data/4095) *3,3V
+3V3
20k
R13
512
R12
+3V3
C3
uC, PB12
Q2
N-MOSFET_SYMBOL
Uthgs = 600mV (=150A Shunt) --> short circuit detection
GND
© Copyright Florian Stäblein 2018
HoverBoard_CoolAndFun
21.06.2018 19:05
Sheet: 2/2

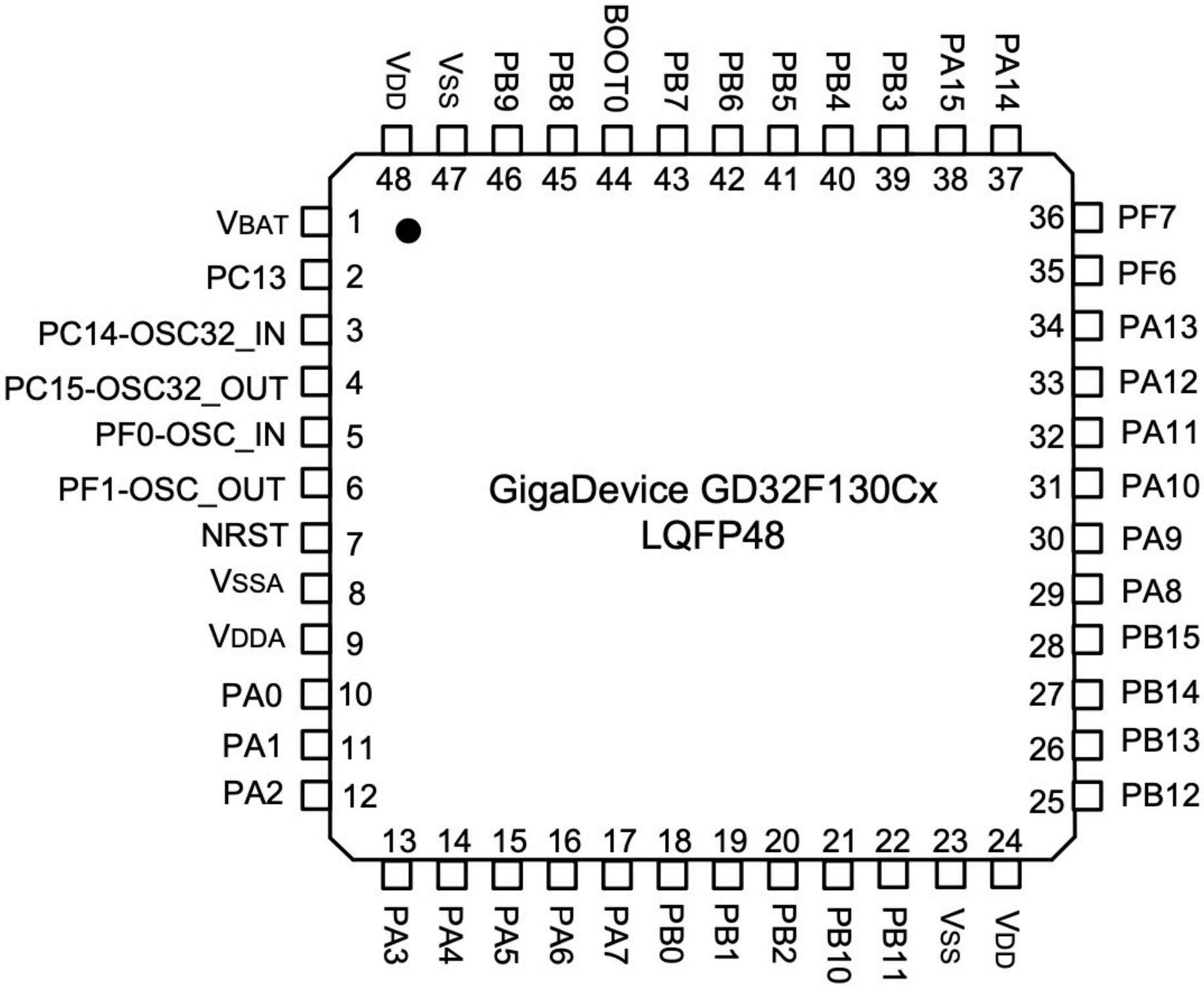
GigaDevice GD32F130Cx
LQFP48
1 VBAT
2 PC13
3 PC14-OSC32_IN
4 PC15-OSC32_OUT
5 PF0-OSC_IN
6 PF1-OSC_OUT
7 NRST
8 VSSA
9 VDDA
10 PA0
11 PA1
12 PA2
13 PA3
14 PA4
15 PA5
16 PA6
17 PA7
18 PB0
19 PB1
20 PB2
21 PB10
22 PB11
23 VSS
24 VDD
25 PB12
26 PB13
27 PB14
28 PB15
29 PA8
30 PA9
31 PA10
32 PA11
33 PA12
34 PA13
35 PF6
36 PF7
37 PA14
38 PA15
39 PB3
40 PB4
41 PB5
42 PB6
43 PB7
44 BOOT0
45 PB8
46 PB9
47 VSS
48 VDD

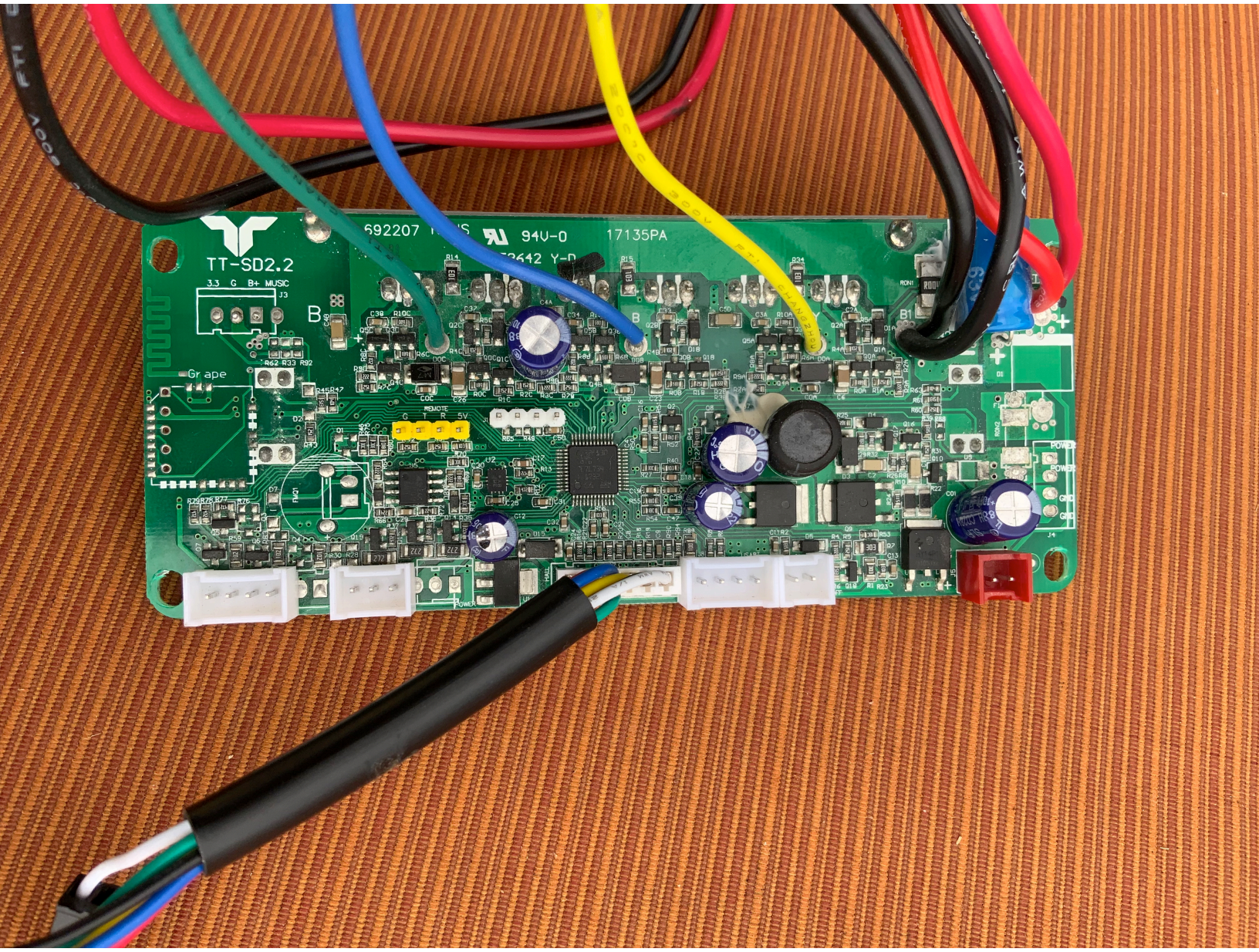
TT-SD2.2
3.3 G B+ MUSIC
J3
94V-0
17135PA
Grape
REMOTE
G T R 5V
POWER

MANUFACTURER:TAOTAO
BOARD PART NUMBER: TT-SD2.2
MOUNTED ON THE FOLLOWING HOVERBOARDS:
-COOL&FUN
-KID PLAY BALBOARD ONE
...ETC

V_BATT: PA4 (analog)
CURRENT_DC: PA6 (analog)
EMERGENCY_OFF: PB12 (in) TIM0_Break_Input
CHARGE_STATE: PF0 (in, pullup)

unused: PB4, PB5, PA6

Accelerometer:equivalent to BOSH BMI160
SDA: PB9 (I2C2)
SCL: PB8 (I2C2)

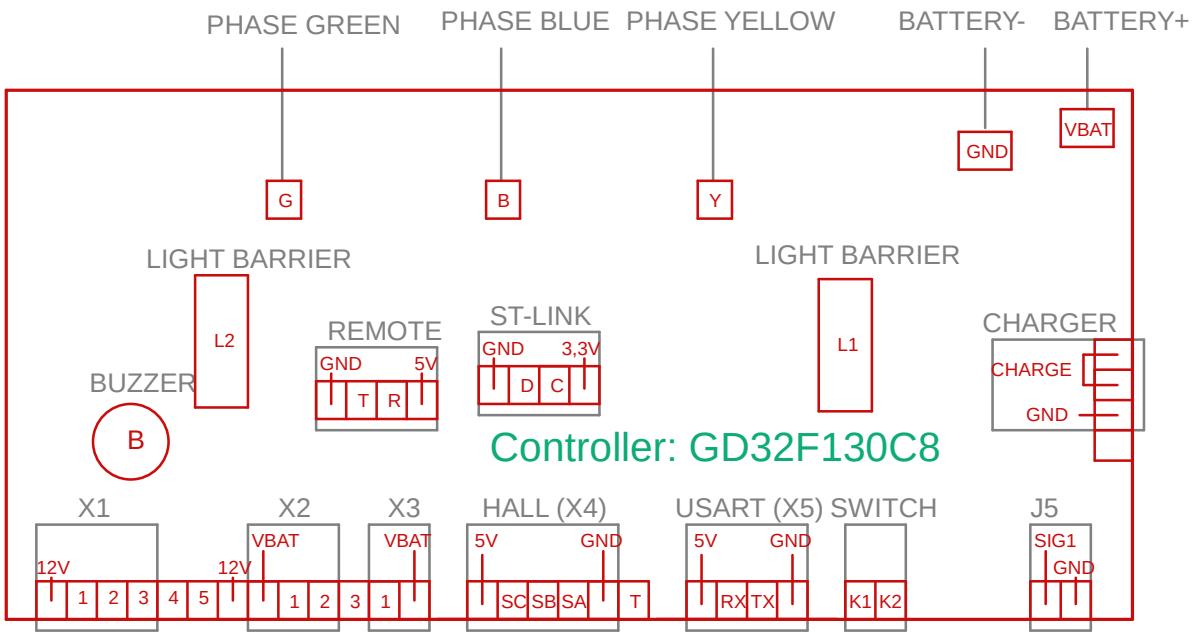

L1: PA7 (in)
L2: PA11 (in)

REMOTE.R: PB7 (I2C1_SDA / USART0_RX)
REMOTE.T: PB6 (I2C1_SCL / USART0_TX)

X1.1: PA12 (out)
X1.2: PA15 (out)
X1.3: PB3 (out)
X1.4: N/A (PB4)
X1.5: N/A (PB5)

X2.1: PA1 (out)
X2.2: PA0 (out)
X2.3: N/A (connected with X3.1)

X3.1: PC13 (out)

X4.SC: PC14 (in)
X4.SB: PF1 (in)
X4.SA: PB11 (in)

X5.RX: PA3 (in, USART1)
X5.TX: PA2 (out, USART1)

BUZZER.B: PB10 (out)
SWITCH.K1: PC15 (in)
LATCH: PB2 (out)

G_High: PA10 (out) TIM0_CH3
G_Low : PB15 (out) TIM0_CH3N
B_High: PA9 (out) TIM0_CH2
B_Low : PB14 (out) TIM0_CH2N
Y_High: PA8 (out) TIM0_CH1
Y_Low : PB13 (out) TIM0_CH1N

Reverse engineered by Florian and Gaucho
HoverBoard_SCHEMATIC_for_TAOTAO TT-SD2.2

© Copyright Florian Stäblein 2018

22/08/2020 10:09
Sheet: 1/4

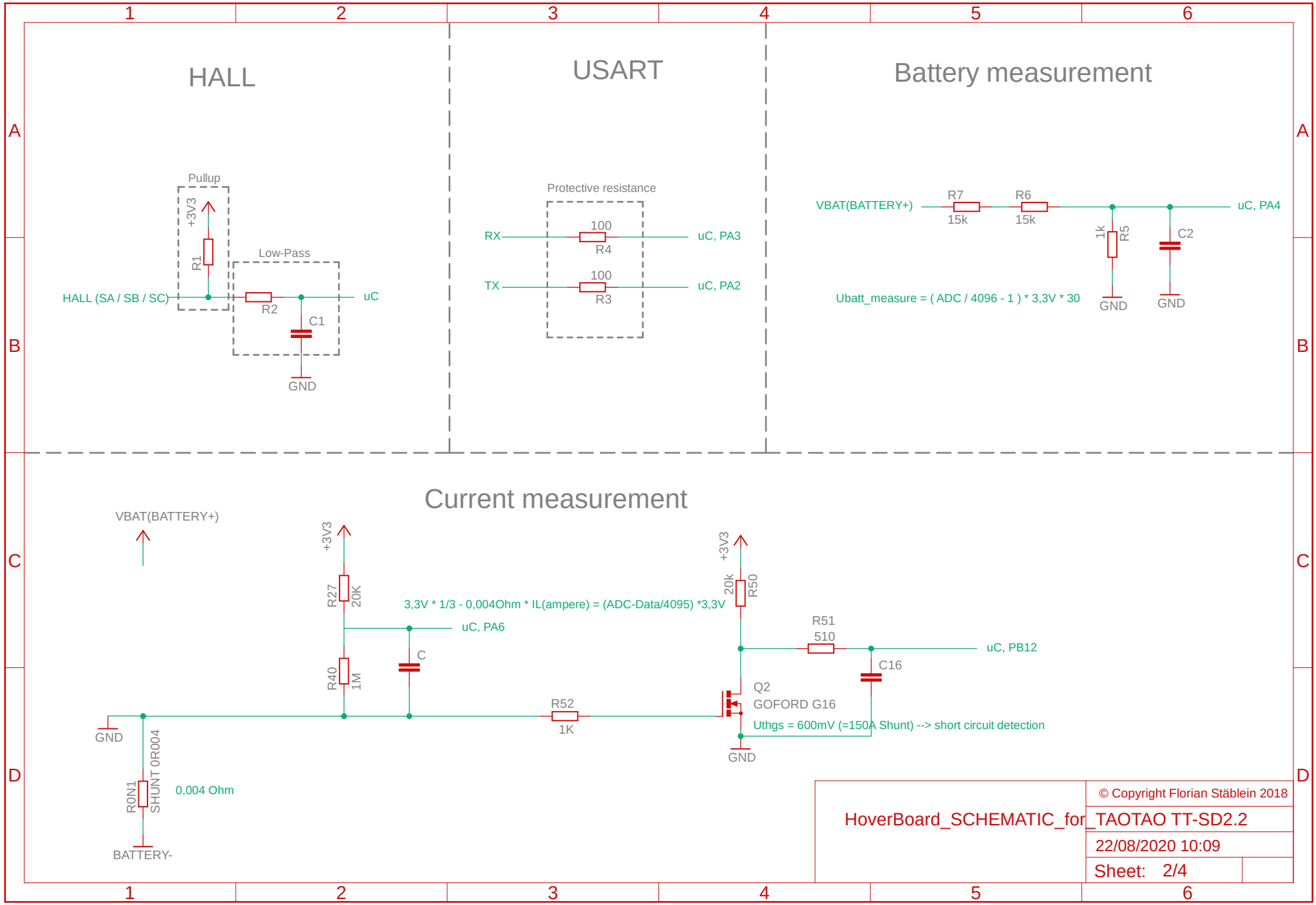
HALL
Pullup
+3V3
R1
Low-Pass
HALL (SA / SB / SC)
R2
C1
uC
GND
USART
Protective resistance
RX
100
R4
uC, PA3
TX
100
R3
uC, PA2
Battery measurement
VBAT(BATTERY+)
R7
15k
R6
15k
uC, PA4
1k
R5
C2
Ubatt_measure = (ADC / 4096 - 1) * 3,3V * 30
GND
GND
Current measurement
VBAT(BATTERY+)
+3V3
R27
20K
3,3V * 1/3 - 0,004Ohm * IL(ampere) = (ADC-Data/4095) *3,3V
uC, PA6
C
R40
1M
GND
R0N1
SHUNT 0R004
0,004 Ohm
BATTERY-
R52
1K
+3V3
20k
R50
R51
510
uC, PB12
C16
Q2
GOFORD G16
Uthgs = 600mV (=150A Shunt) --> short circuit detection
GND
HoverBoard_SCHEMATIC_for_TAOTAO TT-SD2.2
© Copyright Florian Stäblein 2018
22/08/2020 10:09
Sheet: 2/4

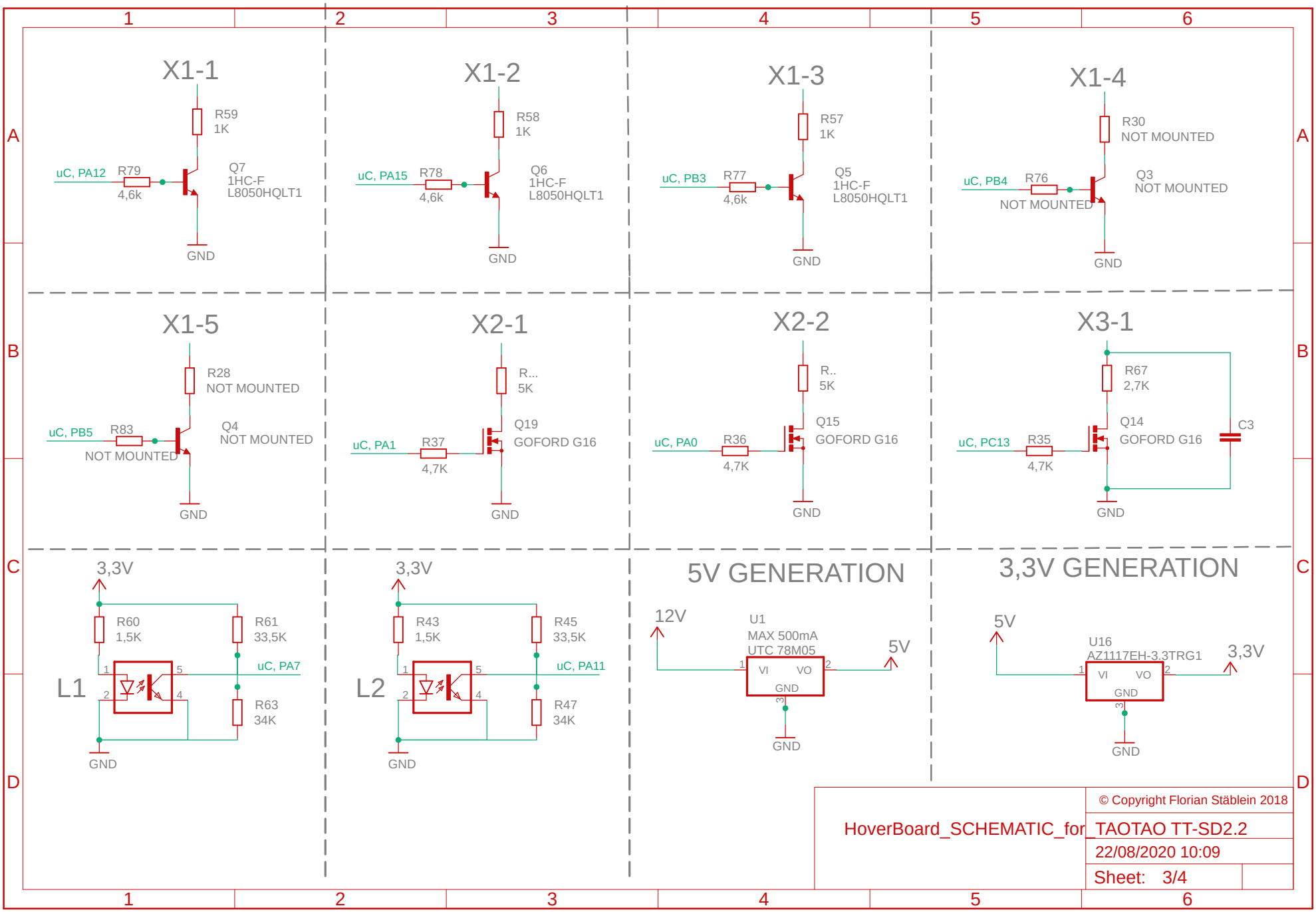
X1-1
R59
1K
uC, PA12
R79
4,6k
Q7
1HC-F
L8050HQLT1
GND
X1-2
R58
1K
uC, PA15
R78
4,6k
Q6
1HC-F
L8050HQLT1
GND
X1-3
R57
1K
uC, PB3
R77
4,6k
Q5
1HC-F
L8050HQLT1
GND
X1-4
R30
NOT MOUNTED
uC, PB4
R76
NOT MOUNTED
Q3
NOT MOUNTED
GND
X1-5
R28
NOT MOUNTED
uC, PB5
R83
NOT MOUNTED
Q4
NOT MOUNTED
GND
X2-1
R...
5K
uC, PA1
R37
4,7K
Q19
GOFORD G16
GND
X2-2
R..
5K
uC, PA0
R36
4,7K
Q15
GOFORD G16
GND
X3-1
R67
2,7K
uC, PC13
R35
4,7K
Q14
GOFORD G16
C3
GND
3,3V
R60
1,5K
R61
33,5K
L1
uC, PA7
R63
34K
GND
3,3V
R43
1,5K
R45
33,5K
L2
uC, PA11
R47
34K
GND
5V GENERATION
12V
U1
MAX 500mA
UTC 78M05
VI
VO
GND
5V
GND
3,3V GENERATION
5V
U16
AZ1117EH-3.3TRG1
VI
VO
GND
3,3V
GND
© Copyright Florian Stäblein 2018
HoverBoard_SCHEMATIC_for_TAOTAO TT-SD2.2
22/08/2020 10:09
Sheet: 3/4

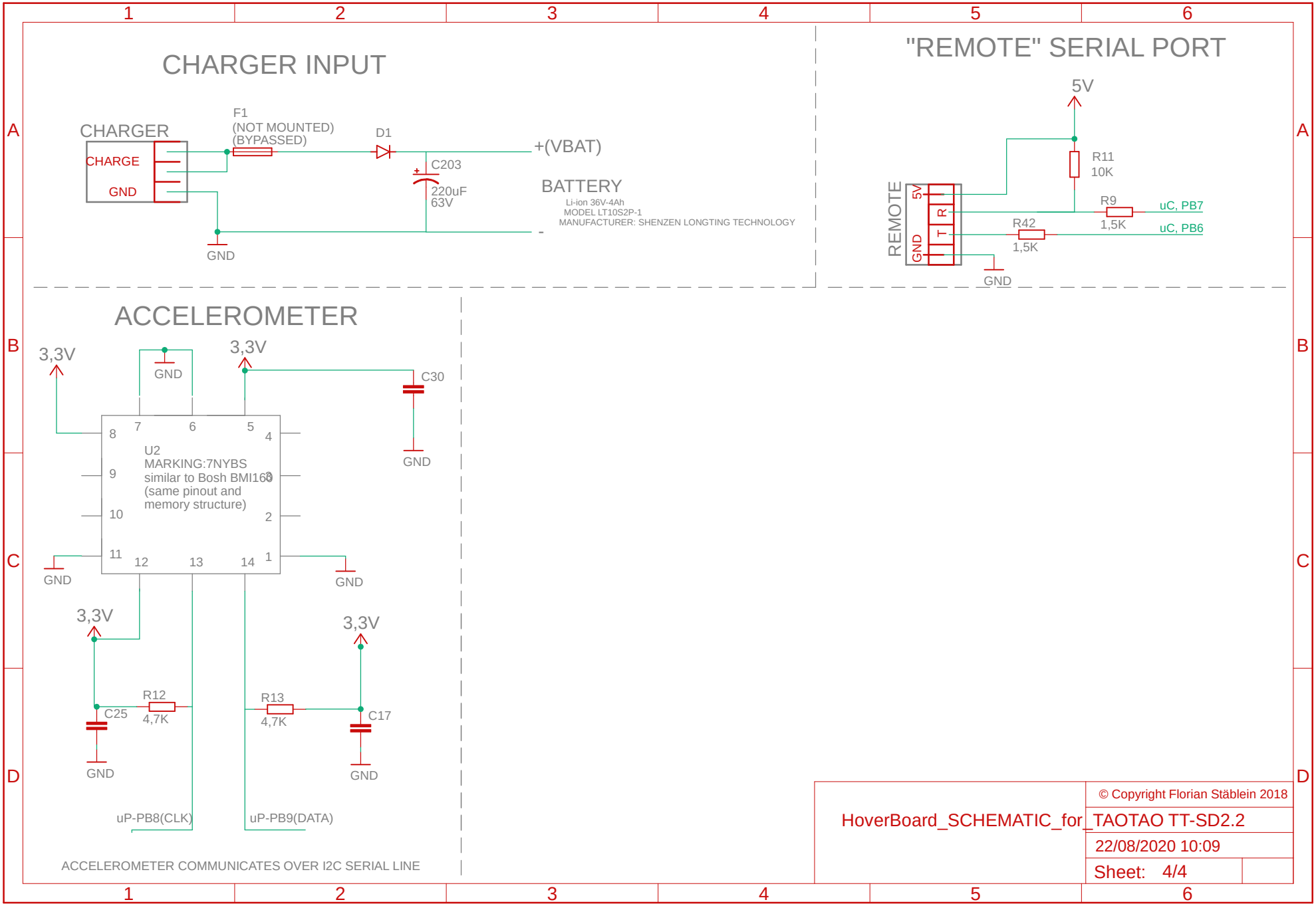
CHARGER INPUT
CHARGER
CHARGE
GND
F1
(NOT MOUNTED)
(BYPASSED)
D1
C203
220uF
63V
+(VBAT)
BATTERY
Li-ion 36V-4Ah
MODEL LT10S2P-1
MANUFACTURER: SHENZEN LONGTING TECHNOLOGY
-
GND
"REMOTE" SERIAL PORT
5V
R11
10K
REMOTE
5V
R
T
GND
R9
1,5K
uC, PB7
R42
1,5K
uC, PB6
GND
ACCELEROMETER
3,3V
GND
3,3V
C30
GND
U2
MARKING:7NYBS
similar to Bosh BMI160
(same pinout and
memory structure)
GND
GND
3,3V
3,3V
R12
4,7K
C25
R13
4,7K
C17
GND
GND
uP-PB8(CLK)
uP-PB9(DATA)
ACCELEROMETER COMMUNICATES OVER I2C SERIAL LINE
HoverBoard_SCHEMATIC_for_TAOTAO TT-SD2.2
© Copyright Florian Stäblein 2018
22/08/2020 10:09
Sheet: 4/4