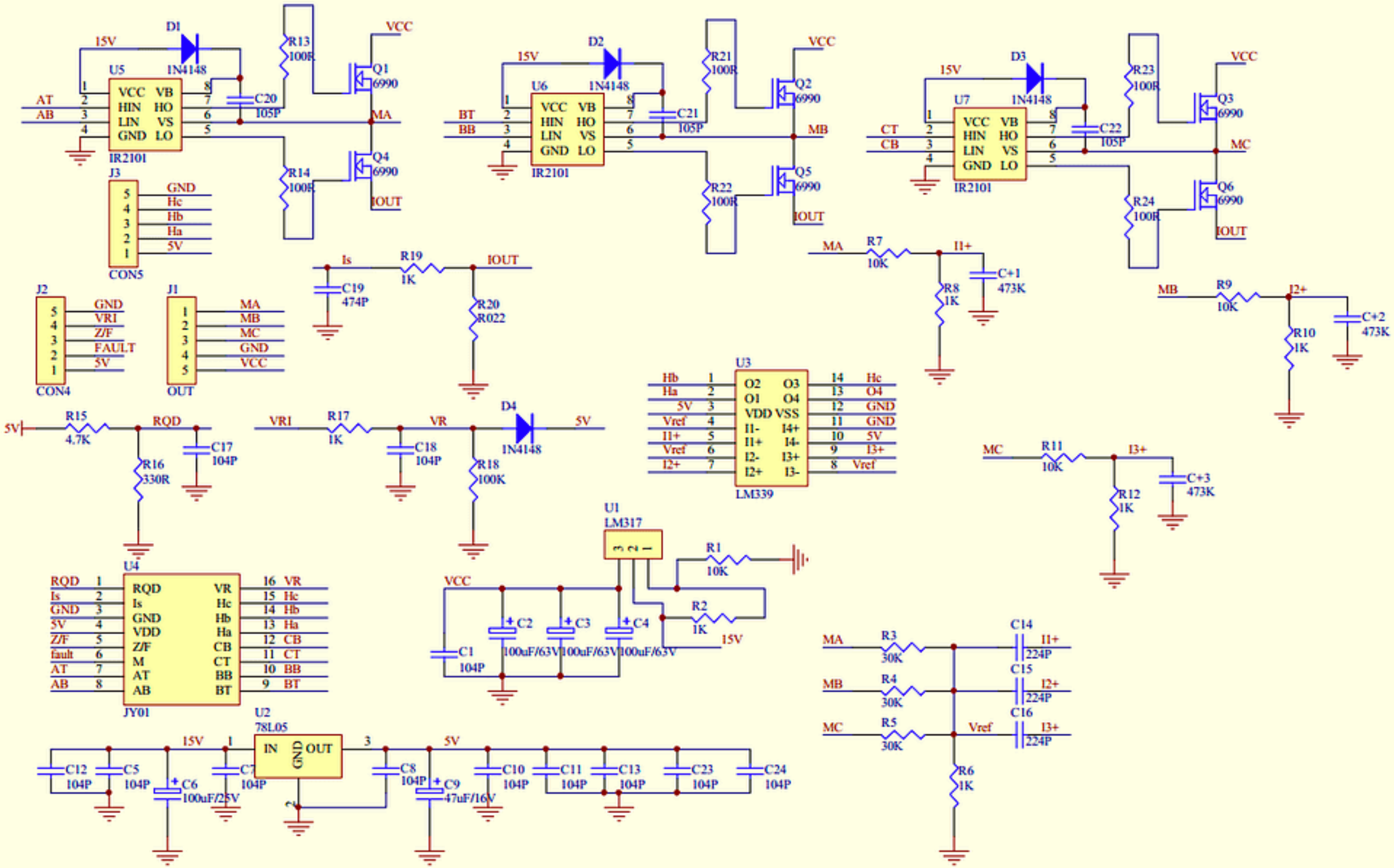
U5
IR2101
D1
1N4148
15V
VCC
VB
HIN
HO
LIN
VS
GND
LO
AT
AB
C20
105P
R13
100R
R14
100R
Q1
6990
Q4
6990
MA
IOUT
J3
CON5
GND
Hc
Hb
Ha
5V
U6
IR2101
D2
1N4148
BT
BB
C21
105P
R21
100R
R22
100R
Q2
6990
Q5
6990
MB
U7
IR2101
D3
1N4148
CT
CB
C22
105P
R23
100R
R24
100R
Q3
6990
Q6
6990
MC
J2
CON4
GND
VRI
Z/F
FAULT
5V
J1
OUT
MA
MB
MC
GND
VCC
Is
R19
1K
C19
474P
R20
R022
MA
R7
10K
I1+
R8
1K
C+1
473K
MB
R9
10K
I2+
R10
1K
C+2
473K
U3
LM339
Hb
Ha
5V
Vref
I1+
Vref
I2+
O2
O1
VDD
I1-
I1+
I2-
I2+
O3
O4
VSS
I4+
I4-
I3+
I3-
Hc
O4
GND
GND
5V
I3+
Vref
5V
R15
4.7K
RQD
R16
330R
C17
104P
VRI
R17
1K
VR
C18
104P
R18
100K
D4
1N4148
5V
MC
R11
10K
I3+
R12
1K
C+3
473K
U4
JY01
RQD
Is
GND
5V
Z/F
fault
AT
AB
RQD
Is
GND
VDD
Z/F
M
AT
AB
VR
Hc
Hb
Ha
CB
CT
BB
BT
U1
LM317
R1
10K
R2
1K
15V
VCC
C1
104P
C2
100uF/63V
C3
100uF/63V
C4
100uF/63V
MA
R3
30K
MB
R4
30K
MC
R5
30K
Vref
R6
1K
C14
224P
C15
224P
C16
224P
I1+
I2+
I3+
U2
78L05
IN
GND
OUT
15V
5V
C12
104P
C5
104P
C6
100uF/25V
C7
104P
C8
104P
C9
47uF/16V
C10
104P
C11
104P
C13
104P
C23
104P
C24
104P

Title