Laplace Transforms

Department of Mathematics

Salt Lake Community College

In this chapter we shall study the Laplace transformation, which will allow us to reframe some types of hard problems

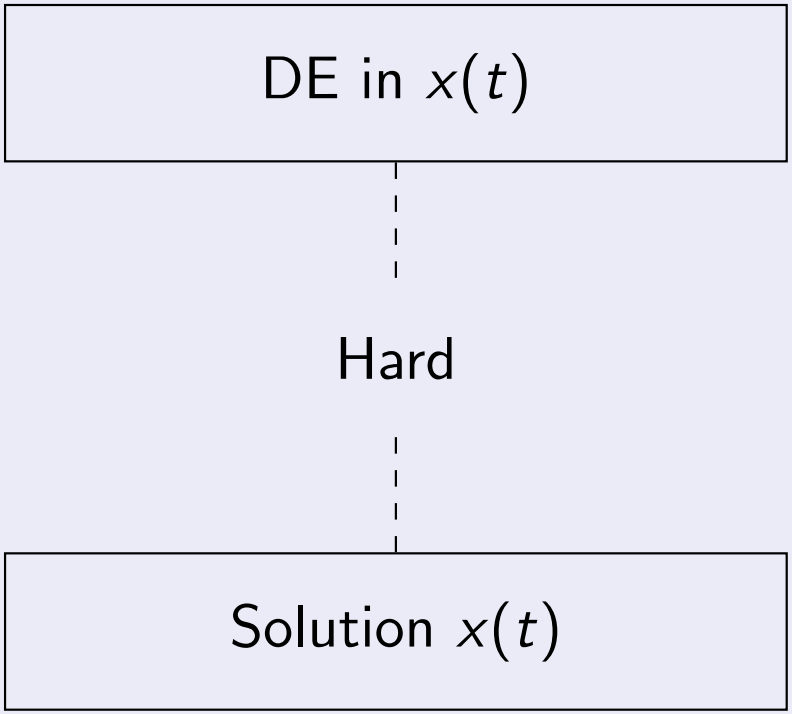

In this chapter we shall study the Laplace transformation, which will allow us to reframe some types of hard problems into equivalent easier problems.

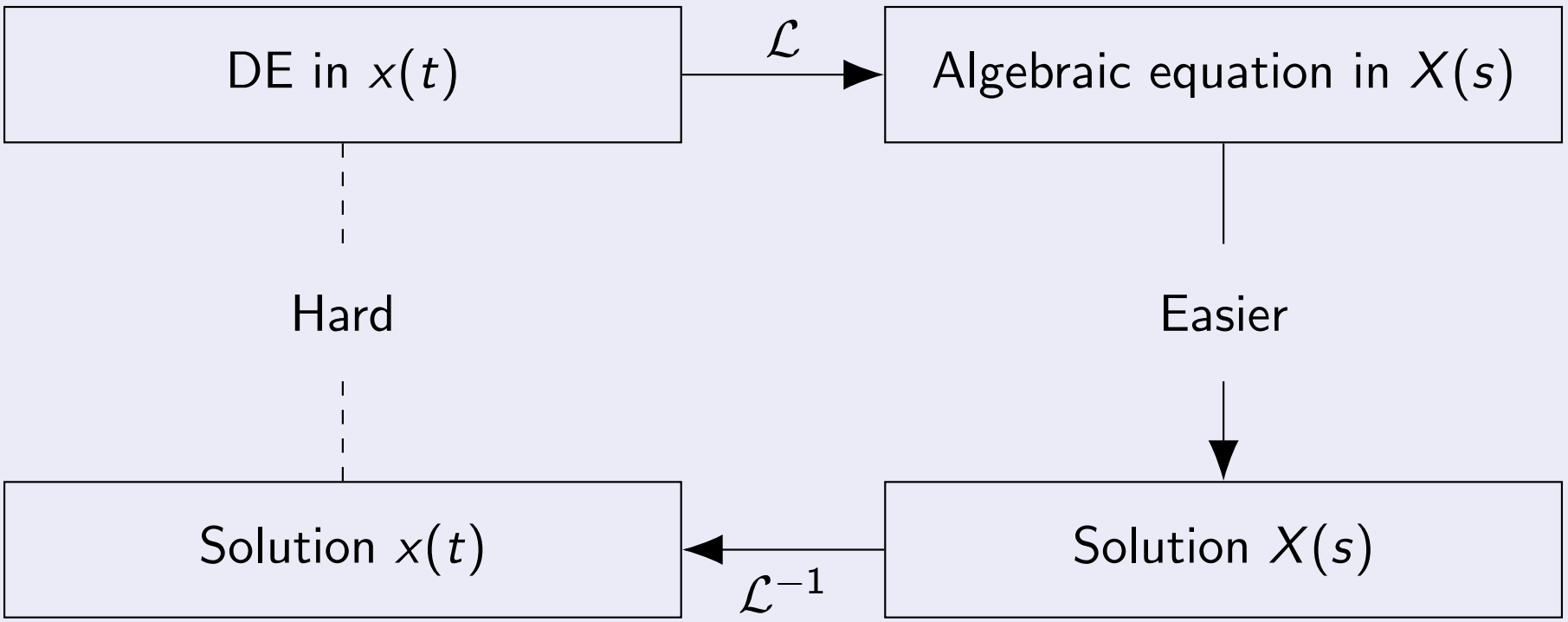

Laplace Transform

The **Laplace Transform** $\mathcal{L}\{f(t)\}$ of a suitable function $f(t)$ defined on $[0, \infty)$ is the function $F(s)$ given by

$$\mathcal{L}\{f(t)\} = F(s) = \int_0^\infty e^{-st} f(t)dt = \lim_{b\to\infty} \int_0^b e^{-st} f(t)dt$$

where s may be complex.

Laplace Transform

The **Laplace Transform** $\mathcal{L}\{f(t)\}$ of a suitable function $f(t)$ defined on $[0, \infty)$ is the function $F(s)$ given by

$$\mathcal{L}\{f(t)\} = F(s) = \int_0^\infty e^{-st} f(t)dt = \lim_{b\to\infty} \int_0^b e^{-st} f(t)dt$$

where s may be complex.

Linearity of the Laplace Transform

If $F(s) = \mathcal{L}\{f(t)\}$ and $G(s) = \mathcal{L}\{g(t)\}$, then by the properties of integrals

$$\mathcal{L}\{af(t) + bg(t)\} = aF(s) + bG(t) \quad \text{for } a, b \in \mathbb{C}$$

Laplace Transform

The **Laplace Transform** $\mathcal{L}\{f(t)\}$ of a suitable function $f(t)$ defined on $[0, \infty)$ is the function $F(s)$ given by

$$\mathcal{L}\{f(t)\} = F(s) = \int_0^\infty e^{-st} f(t)dt = \lim_{b\to\infty} \int_0^b e^{-st} f(t)dt$$

where s may be complex.

Linearity of the Laplace Transform

If $F(s) = \mathcal{L}\{f(t)\}$ and $G(s) = \mathcal{L}\{g(t)\}$, then by the properties of integrals

$$\mathcal{L}\{af(t) + bg(t)\} = aF(s) + bG(t) \quad \text{for } a, b \in \mathbb{C}$$

Existence Theorem for Laplace Transform

If $f(t)$ is piecewise continuous on $[0, \infty)$ and of exponential order α, then the Laplace transform $F(s) = \mathcal{L}\{f(t)\}$ exists for $s > \alpha$.

Example 1

Let us consider the constant function $f(t) = 1$.

Example 1

Let us consider the constant function $f(t) = 1$.

For $t \geq 0$, we can calculate

$\mathcal{L}\{f(t)\}$

Example 1

Let us consider the constant function $f(t) = 1$.

For $t \geq 0$, we can calculate

$$\mathcal{L}\{f(t)\} = \mathcal{L}\{1\}$$

Example 1

Let us consider the constant function $f(t) = 1$.

For $t \geq 0$, we can calculate

$$\mathcal{L}\{f(t)\} = \mathcal{L}\{1\} = \int_0^\infty e^{-st} \cdot 1 dt$$

Example 1

Let us consider the constant function $f(t) = 1$.

For $t \geq 0$, we can calculate

$$\mathcal{L}\{f(t)\} = \mathcal{L}\{1\} = \int_0^\infty e^{-st} \cdot 1 dt = \lim_{b \to \infty} \left[-\frac{e^{-st}}{s} \right]_0^b$$

Example 1

Let us consider the constant function $f(t) = 1$.

For $t \geq 0$, we can calculate

$$\mathcal{L}\{f(t)\} = \mathcal{L}\{1\} = \int_0^\infty e^{-st} \cdot 1 dt = \lim_{b\to\infty} \left[-\frac{e^{-st}}{s}\right]_0^b = \lim_{b\to\infty} \left[-\frac{e^{-sb}}{s} + \frac{1}{s}\right]$$

Example 1

Let us consider the constant function $f(t) = 1$.

For $t \geq 0$, we can calculate

$$\mathcal{L}\{f(t)\} = \mathcal{L}\{1\} = \int_0^\infty e^{-st} \cdot 1 dt = \lim_{b\to\infty} \left[-\frac{e^{-st}}{s}\right]_0^b = \lim_{b\to\infty} \left[-\frac{e^{-sb}}{s} + \frac{1}{s}\right]$$

If $s > 0$, then $e^{-sb} = \dfrac{1}{e^{sb}} \to 0$ as $b \to \infty$.

Example 1

Let us consider the constant function $f(t) = 1$.

For $t \geq 0$, we can calculate

$$\mathcal{L}\{f(t)\} = \mathcal{L}\{1\} = \int_0^\infty e^{-st} \cdot 1 dt = \lim_{b\to\infty} \left[-\frac{e^{-st}}{s}\right]_0^b = \lim_{b\to\infty} \left[-\frac{e^{-sb}}{s} + \frac{1}{s}\right]$$

If $s > 0$, then $e^{-sb} = \dfrac{1}{e^{sb}} \to 0$ as $b \to \infty$.

$$\mathcal{L}\{1\} = F(s) = \frac{1}{s} \quad s > 0$$

Example 1

Let us consider the constant function $f(t) = 1$.

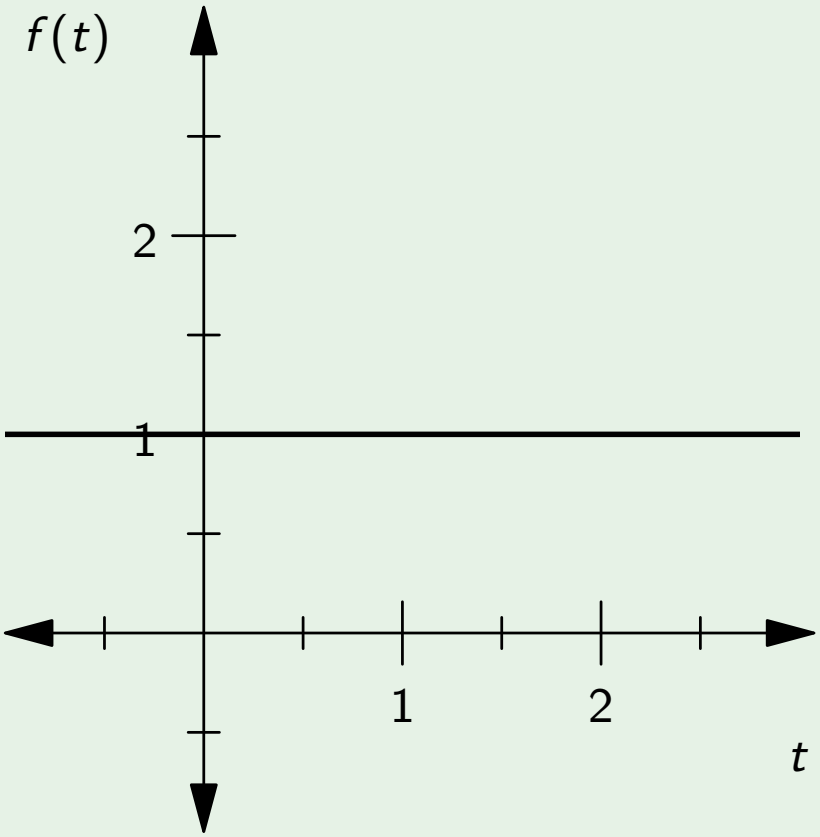

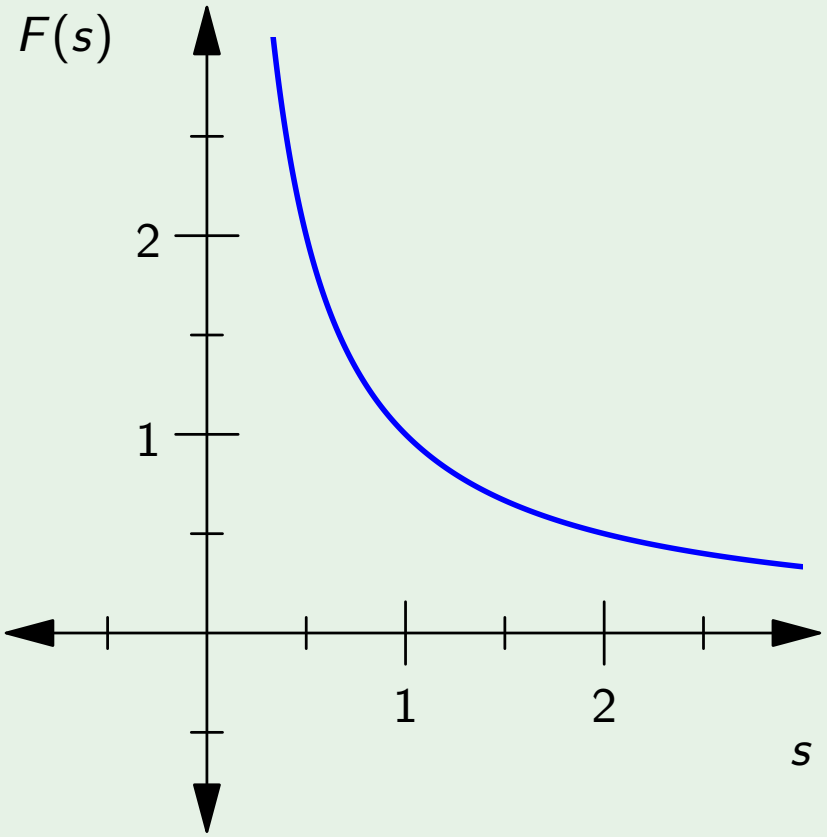

Example 2

Let us consider the constant function $f(t) = e^{at}$, $a \in \mathbb{R}$.

Example 2

Let us consider the constant function $f(t) = e^{at}$, $a \in \mathbb{R}$.

For $t \geq 0$, we can calculate

$$\mathcal{L}\{f(t)\}$$

Example 2

Let us consider the constant function $f(t) = e^{at}$, $a \in \mathbb{R}$.

For $t \geq 0$, we can calculate

$$\mathcal{L}\{f(t)\} = \mathcal{L}\{e^{at}\}$$

Example 2

Let us consider the constant function $f(t) = e^{at}$, $a \in \mathbb{R}$.

For $t \geq 0$, we can calculate

$$\mathcal{L}\{f(t)\} = \mathcal{L}\{e^{at}\} = \int_0^\infty e^{-st} \cdot e^{at} dt$$

Example 2

Let us consider the constant function $f(t) = e^{at}$, $a \in \mathbb{R}$.

For $t \geq 0$, we can calculate

$$\mathcal{L}\{f(t)\} = \mathcal{L}\{e^{at}\} = \int_0^\infty e^{-st} \cdot e^{at} dt = \lim_{b \to \infty} \int_0^b e^{-(s-a)t} dt$$

Example 2

Let us consider the constant function $f(t) = e^{at}$, $a \in \mathbb{R}$.

For $t \geq 0$, we can calculate

$$\mathcal{L}\{f(t)\} = \mathcal{L}\{e^{at}\} = \int_0^\infty e^{-st} \cdot e^{at} dt = \lim_{b\to\infty} \int_0^b e^{-(s-a)t} dt$$
$$= \lim_{b\to\infty} \left[-\frac{e^{-(s-a)b}}{s-a} + \frac{1}{s-a} \right]$$

Example 2

Let us consider the constant function $f(t) = e^{at}$, $a \in \mathbb{R}$.

For $t \geq 0$, we can calculate

$$\mathcal{L}\{f(t)\} = \mathcal{L}\{e^{at}\} = \int_0^\infty e^{-st} \cdot e^{at} dt = \lim_{b\to\infty} \int_0^b e^{-(s-a)t} dt$$
$$= \lim_{b\to\infty} \left[-\frac{e^{-(s-a)b}}{s-a} + \frac{1}{s-a} \right]$$

If $s > 0$ and $s > a$, then $e^{-(s-a)b} = \dfrac{1}{e^{(s-a)b}} \to 0$ as $b \to \infty$.

Example 2

Let us consider the constant function $f(t) = e^{at}$, $a \in \mathbb{R}$.

For $t \geq 0$, we can calculate

$$\mathcal{L}\{f(t)\} = \mathcal{L}\{e^{at}\} = \int_0^\infty e^{-st} \cdot e^{at} dt = \lim_{b\to\infty} \int_0^b e^{-(s-a)t} dt$$
$$= \lim_{b\to\infty} \left[-\frac{e^{-(s-a)b}}{s-a} + \frac{1}{s-a} \right]$$

If $s > 0$ and $s > a$, then $e^{-(s-a)b} = \dfrac{1}{e^{(s-a)b}} \to 0$ as $b \to \infty$.

$$\mathcal{L}\{e^{at}\} = F(s) = \frac{1}{s-a} \quad s > a$$

Example 2

Let us consider the constant function $f(t) = e^{at}$, $a \in \mathbb{R}$.

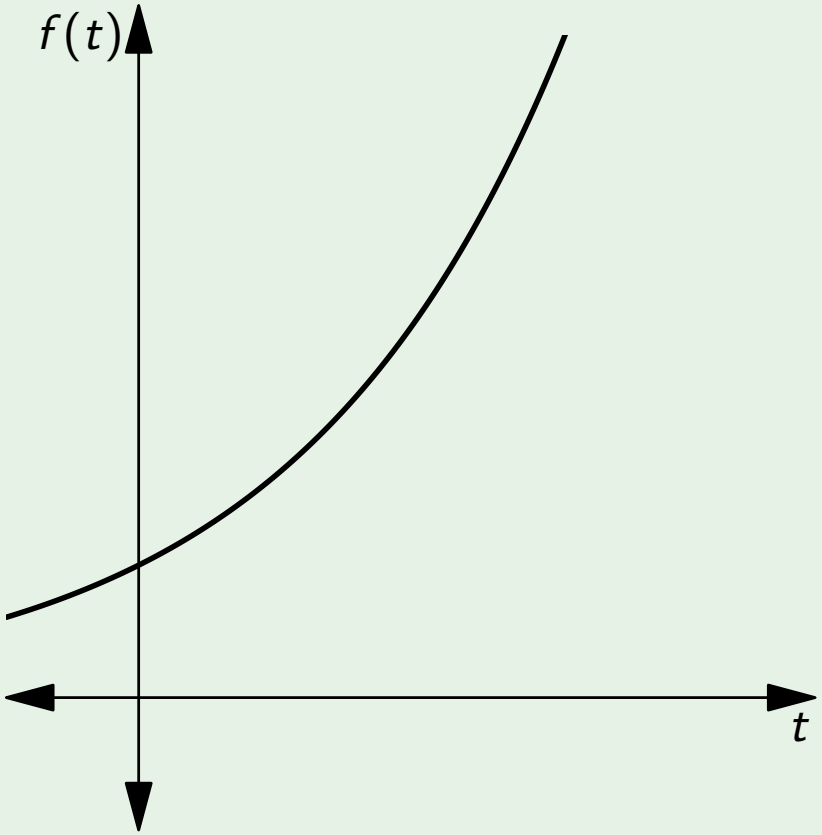

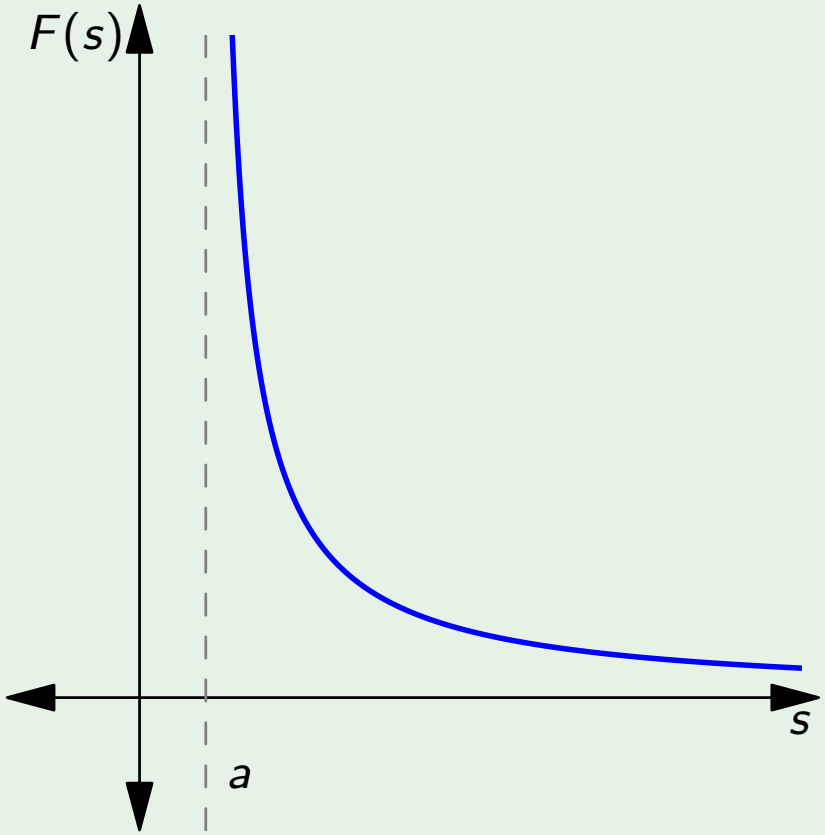

Example 3

Let us calculate the Laplace transform for $f(t) = 5 - 3e^{-2t}$

Example 3

Let us calculate the Laplace transform for $f(t) = 5 - 3e^{-2t}$

$$\mathcal{L}\{f(t)\}$$

Example 3

Let us calculate the Laplace transform for $f(t) = 5 - 3e^{-2t}$

$$\mathcal{L}\{f(t)\} = \mathcal{L}\{5 \cdot 1 - 3e^{-2t}\}$$

Example 3

Let us calculate the Laplace transform for $f(t) = 5 - 3e^{-2t}$

$$\begin{aligned}\mathcal{L}\{f(t)\} &= \mathcal{L}\{5 \cdot 1 - 3e^{-2t}\} \\ &= 5\mathcal{L}\{1\} - 3\mathcal{L}\{e^{-2t}\}\end{aligned}$$

Example 3

Let us calculate the Laplace transform for $f(t) = 5 - 3e^{-2t}$

$$\begin{aligned}\mathcal{L}\{f(t)\} &= \mathcal{L}\{5 \cdot 1 - 3e^{-2t}\} \\ &= 5\mathcal{L}\{1\} - 3\mathcal{L}\{e^{-2t}\} \\ &= 5\left(\frac{1}{s}\right) - 3\left(\frac{1}{s+2}\right)\end{aligned}$$

Example 3

Let us calculate the Laplace transform for $f(t) = 5 - 3e^{-2t}$

$$\begin{aligned}
\mathcal{L}\{f(t)\} &= \mathcal{L}\{5 \cdot 1 - 3e^{-2t}\} \\
&= 5\mathcal{L}\{1\} - 3\mathcal{L}\{e^{-2t}\} \\
&= 5\left(\frac{1}{s}\right) - 3\left(\frac{1}{s+2}\right) \\
&= \frac{2s+10}{s(s+2)}
\end{aligned}$$

Example 4

Instead of directly calculating the Laplace transform for sin and cos, let us use Euler's formula to make the job easier.

Example 4

Instead of directly calculating the Laplace transform for sin and cos, let us use Euler's formula to make the job easier.

$$\mathcal{L}\{e^{ikt}\}$$

Example 4

Instead of directly calculating the Laplace transform for sin and cos, let us use Euler's formula to make the job easier.

$$\mathcal{L}\{e^{ikt}\} = \mathcal{L}\{\cos(kt) + i\sin(kt)\}$$

Example 4

Instead of directly calculating the Laplace transform for sin and cos, let us use Euler's formula to make the job easier.

$$\mathcal{L}\{e^{ikt}\} = \mathcal{L}\{\cos(kt) + i\sin(kt)\} = \mathcal{L}\{\cos(kt)\} + i\mathcal{L}\{\sin(kt)\}$$

Example 4

Instead of directly calculating the Laplace transform for sin and cos, let us use Euler's formula to make the job easier.

$$\mathcal{L}\{e^{ikt}\} = \mathcal{L}\{\cos(kt) + i\sin(kt)\} = \mathcal{L}\{\cos(kt)\} + i\mathcal{L}\{\sin(kt)\}$$

But, we know how to calculate e^{ikt}:

$$\mathcal{L}\{e^{ikt}\} = \frac{1}{s - ik}$$

Example 4

Instead of directly calculating the Laplace transform for sin and cos, let us use Euler's formula to make the job easier.

$$\mathcal{L}\{e^{ikt}\} = \mathcal{L}\{\cos(kt) + i\sin(kt)\} = \mathcal{L}\{\cos(kt)\} + i\mathcal{L}\{\sin(kt)\}$$

But, we know how to calculate e^{ikt}:

$$\mathcal{L}\{e^{ikt}\} = \frac{1}{s - ik} \cdot \frac{s + ik}{s + ik}$$

Example 4

Instead of directly calculating the Laplace transform for sin and cos, let us use Euler's formula to make the job easier.

$$\mathcal{L}\{e^{ikt}\} = \mathcal{L}\{\cos(kt) + i\sin(kt)\} = \mathcal{L}\{\cos(kt)\} + i\mathcal{L}\{\sin(kt)\}$$

But, we know how to calculate e^{ikt}:

$$\begin{aligned}\mathcal{L}\{e^{ikt}\} &= \frac{1}{s-ik}\cdot\frac{s+ik}{s+ik}\\ &= \frac{s+ik}{s^2+k^2}\end{aligned}$$

Example 4

Instead of directly calculating the Laplace transform for sin and cos, let us use Euler's formula to make the job easier.

$$\mathcal{L}\{e^{ikt}\} = \mathcal{L}\{\cos(kt) + i\sin(kt)\} = \mathcal{L}\{\cos(kt)\} + i\mathcal{L}\{\sin(kt)\}$$

But, we know how to calculate e^{ikt}:

$$\begin{aligned}\mathcal{L}\{e^{ikt}\} &= \frac{1}{s-ik}\cdot\frac{s+ik}{s+ik} \\ &= \frac{s+ik}{s^2+k^2} \\ &= \frac{s}{s^2+k^2} + i\frac{k}{s^2+k^2}\end{aligned}$$

Example 4

Instead of directly calculating the Laplace transform for sin and cos, let us use Euler's formula to make the job easier.

$$\mathcal{L}\{e^{ikt}\} = \mathcal{L}\{\cos(kt) + i\sin(kt)\} = \mathcal{L}\{\cos(kt)\} + i\mathcal{L}\{\sin(kt)\}$$

But, we know how to calculate e^{ikt}:

$$\begin{aligned}\mathcal{L}\{e^{ikt}\} &= \frac{1}{s-ik}\cdot\frac{s+ik}{s+ik}\\ &= \frac{s+ik}{s^2+k^2}\\ &= \frac{s}{s^2+k^2} + i\frac{k}{s^2+k^2}\end{aligned}$$

So, if we equate the real and imaginary parts, we get:

$$\mathcal{L}\{\cos(kt)\} = \frac{s}{s^2+k^2} \quad \text{and} \quad \mathcal{L}\{\sin(kt)\} = \frac{k}{s^2+k^2}$$

Inverse Laplace Transform

A function $f(t)$ whose transform if $F(s)$ is called the **inverse Laplace transform** of F, and we write

$$f(t) = \mathcal{L}^{-1}\{F(s)\}$$

Example 5

Let us calculate the inverse Laplace transform for

$$F(s) = \frac{2s - 14}{(s+1)(s-3)}$$

Example 5

Let us calculate the inverse Laplace transform for

$$F(s) = \frac{2s - 14}{(s+1)(s-3)}$$

The Partial Fractions Decomposition of $F(s)$ is

$$F(s) = \frac{4}{s+1} - 2\frac{2}{s-3} = 4 \cdot \frac{1}{s+1} - 2 \cdot \frac{1}{s-3}$$

Example 5

Let us calculate the inverse Laplace transform for

$$F(s) = \frac{2s - 14}{(s+1)(s-3)}$$

The Partial Fractions Decomposition of $F(s)$ is

$$F(s) = \frac{4}{s+1} - 2\frac{2}{s-3} = 4 \cdot \frac{1}{s+1} - 2 \cdot \frac{1}{s-3}$$

So, we can use linearity to find $f(t)$.

$$F(s) = 4\mathcal{L}\{e^{-t}\} - 2\mathcal{L}\{3t\}$$

Example 5

Let us calculate the inverse Laplace transform for

$$F(s) = \frac{2s - 14}{(s+1)(s-3)}$$

The Partial Fractions Decomposition of $F(s)$ is

$$F(s) = \frac{4}{s+1} - 2\frac{2}{s-3} = 4 \cdot \frac{1}{s+1} - 2 \cdot \frac{1}{s-3}$$

So, we can use linearity to find $f(t)$.

$$F(s) = 4\mathcal{L}\{e^{-t}\} - 2\mathcal{L}\{3t\} = \mathcal{L}\{4e^{-t} - 2e^{3t}\}$$

Example 5

Let us calculate the inverse Laplace transform for

$$F(s) = \frac{2s - 14}{(s+1)(s-3)}$$

The Partial Fractions Decomposition of $F(s)$ is

$$F(s) = \frac{4}{s+1} - 2\frac{2}{s-3} = 4 \cdot \frac{1}{s+1} - 2 \cdot \frac{1}{s-3}$$

So, we can use linearity to find $f(t)$.

$$F(s) = 4\mathcal{L}\{e^{-t}\} - 2\mathcal{L}\{3t\} = \mathcal{L}\{4e^{-t} - 2e^{3t}\}$$

Thus,

$$f(t) = 4e^{-t} - 2e^{3t}$$

Some Laplace Transforms

$f(t)$	$\mathcal{L}\{f(t)\}$	
1	$\dfrac{1}{s}$	$s > 0$
t^n	$\dfrac{n!}{s^{n+1}}$	$s > 0,\ n \in \mathbb{N}^+$
e^{at}	$\dfrac{1}{s-a}$	$s > a$
$t^n e^{at}$	$\dfrac{n!}{(s-a)^{n+1}}$	$s > a,\ n \in \mathbb{N}^+$
$\sin(bt)$	$\dfrac{b}{s^2+b^2}$	$s > 0$
$\cos(bt)$	$\dfrac{s}{s^2+b^2}$	$s > 0$

Some More Laplace Transforms

$f(t)$	$\mathcal{L}\{f(t)\}$	
$e^{at}\sin(bt)$	$\dfrac{b}{(s-a)^2+b^2}$	$s > a$
$e^{at}\cos(bt)$	$\dfrac{s-a}{(s-a)^2+b^2}$	$s > a$
$\sinh(bt)$	$\dfrac{b}{s^2-b^2}$	$s > \lvert b\rvert$
$\cosh(bt)$	$\dfrac{s}{s^2-b^2}$	$s > \lvert b\rvert$

Example 6

Let us find the inverse Laplace transform for

$$F(s) = \frac{2s^2 - s + 11}{(s-1)(s^2+5)}$$

Example 6

Let us find the inverse Laplace transform for

$$F(s) = \frac{2s^2 - s + 11}{(s-1)(s^2+5)}$$

We can again use Partial Fraction Decomposition.

$$\frac{2s^2 - s + 11}{(s-1)(s^2+5)} = \frac{2}{s-1} - \frac{1}{s^2+5}$$

Example 6

Let us find the inverse Laplace transform for

$$F(s) = \frac{2s^2 - s + 11}{(s-1)(s^2+5)}$$

We can again use Partial Fraction Decomposition.

$$\frac{2s^2 - s + 11}{(s-1)(s^2+5)} = \frac{2}{s-1} - \frac{1}{s^2+5}$$

Now, if we let $b = \sqrt{5}$, then F becomes

$$F(s) = 2\underbrace{\left(\frac{1}{s-1}\right)}_{\mathcal{L}\{e^t\}} - \frac{1}{\sqrt{5}}\underbrace{\left(\frac{\sqrt{5}}{s^2 + \left(\sqrt{5}\right)^2}\right)}_{\mathcal{L}\{\sin\left(\sqrt{5}t\right)}}$$

Example 6

Let us find the inverse Laplace transform for

$$F(s) = \frac{2s^2 - s + 11}{(s-1)(s^2+5)}$$

We can again use Partial Fraction Decomposition.

$$\frac{2s^2 - s + 11}{(s-1)(s^2+5)} = \frac{2}{s-1} - \frac{1}{s^2+5}$$

Now, if we let $b = \sqrt{5}$, then F becomes

$$F(s) = 2\underbrace{\left(\frac{1}{s-1}\right)}_{\mathcal{L}\{e^t\}} - \frac{1}{\sqrt{5}}\underbrace{\left(\frac{\sqrt{5}}{s^2 + \left(\sqrt{5}\right)^2}\right)}_{\mathcal{L}\{\sin\left(\sqrt{5}t\right)}}$$

Thus, $f(t) = \mathcal{L}^{-1}\{F(s)\} = 2e^t - \frac{1}{\sqrt{5}}\sin\left(\sqrt{5}t\right)$.

Example 7

Consider

$$F(s) = \frac{s+1}{s^2+4s+13}$$

Example 7

Consider

$$F(s) = \frac{s+1}{s^2+4s+13}$$

To find $\mathcal{L}\{F(s)\}$, we will need to rearrange things a bit.

$$\frac{s+1}{s^2+4s+13} = \frac{(s+2)-1}{(s^2+4s+4)+(9)}$$

Example 7

Consider

$$F(s) = \frac{s+1}{s^2+4s+13}$$

To find $\mathcal{L}\{F(s)\}$, we will need to rearrange things a bit.

$$\begin{aligned}\frac{s+1}{s^2+4s+13} &= \frac{(s+2)-1}{(s^2+4s+4)+(9)} \\ &= \frac{(s+2)-1}{(s+2)^2+3^2}\end{aligned}$$

Example 7

Consider

$$F(s) = \frac{s+1}{s^2+4s+13}$$

To find $\mathcal{L}\{F(s)\}$, we will need to rearrange things a bit.

$$\begin{aligned}
\frac{s+1}{s^2+4s+13} &= \frac{(s+2)-1}{(s^2+4s+4)+(9)} \\
&= \frac{(s+2)-1}{(s+2)^2+3^2} \\
&= \frac{s+2}{(s+2)^2+3^2} - \frac{1}{(s+2)^2+3^2}
\end{aligned}$$

Example 7

Consider

$$F(s) = \frac{s+1}{s^2+4s+13}$$

To find $\mathcal{L}\{F(s)\}$, we will need to rearrange things a bit.

$$\begin{aligned}
\frac{s+1}{s^2+4s+13} &= \frac{(s+2)-1}{(s^2+4s+4)+(9)} \\
&= \frac{(s+2)-1}{(s+2)^2+3^2} \\
&= \frac{s+2}{(s+2)^2+3^2} - \frac{1}{(s+2)^2+3^2} \\
&= \frac{s+2}{(s+2)^2+3^2} - \frac{1}{3}\frac{3}{(s+2)^2+3^2}
\end{aligned}$$

Example 7

Consider

$$F(s) = \frac{s+1}{s^2+4s+13}$$

To find $\mathcal{L}\{F(s)\}$, we will need to rearrange things a bit.

$$\begin{aligned}
\frac{s+1}{s^2+4s+13} &= \frac{(s+2)-1}{(s^2+4s+4)+(9)} \\
&= \frac{(s+2)-1}{(s+2)^2+3^2} \\
&= \frac{s+2}{(s+2)^2+3^2} - \frac{1}{(s+2)^2+3^2} \\
&= \frac{s+2}{(s+2)^2+3^2} - \frac{1}{3}\frac{3}{(s+2)^2+3^2} \\
&= \mathcal{L}\{e^{-2t}\cos(3t)\} - \frac{1}{3}\mathcal{L}\{s^{-2t}\sin(3t)\}
\end{aligned}$$

Example 7

Consider

$$F(s) = \frac{s+1}{s^2+4s+13}$$

To find $\mathcal{L}\{F(s)\}$, we will need to rearrange things a bit.

$$\begin{aligned}
\frac{s+1}{s^2+4s+13} &= \frac{(s+2)-1}{(s^2+4s+4)+(9)} \\
&= \frac{(s+2)-1}{(s+2)^2+3^2} \\
&= \frac{s+2}{(s+2)^2+3^2} - \frac{1}{(s+2)^2+3^2} \\
&= \frac{s+2}{(s+2)^2+3^2} - \frac{1}{3}\frac{3}{(s+2)^2+3^2} \\
&= \mathcal{L}\{e^{-2t}\cos(3t)\} - \frac{1}{3}\mathcal{L}\{s^{-2t}\sin(3t)\}
\end{aligned}$$

Thus, by linearity we have $f(t) = e^{-2t}\cos(3t) - \frac{1}{3}s^{-2t}\sin(3t)$.