REVISION	DESCRIPTION	AUTHOR	DATE
A1	初始版本	LHX	2025-12-01

RUIYAN		
Title	RY_LQS_ETERCAT_POWER_A1	
Size A3	Document Number 01_Revision	Rev
Date: Tuesday, December 09, 2025	Sheet 1 of 5	

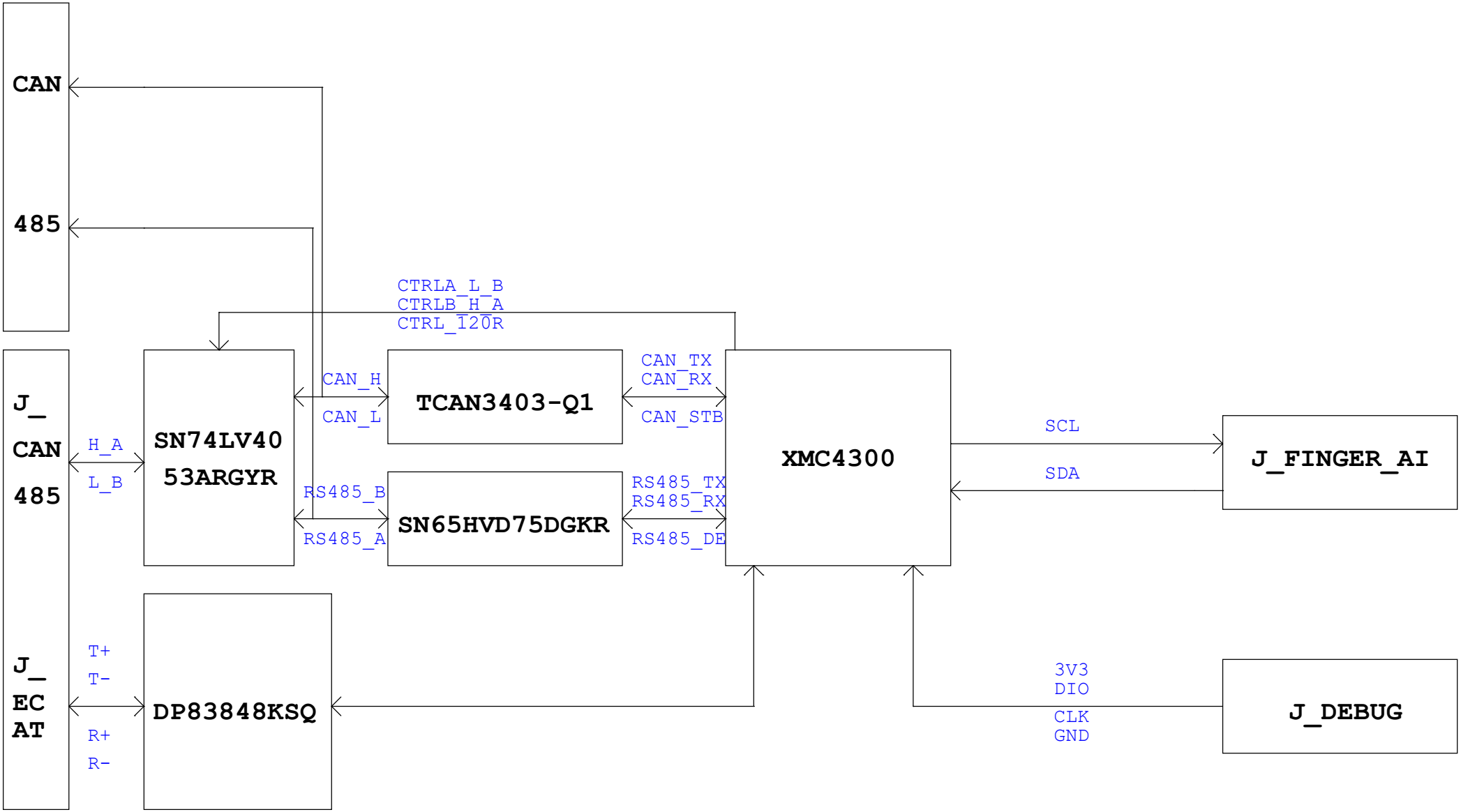

RUIYAN			
Title	RY_LQS_ETERCAT_POWER_A1		
Size A3	Document Number 02_Block		Rev
Date: Tuesday, December 09, 2025	Sheet 2 of 5		

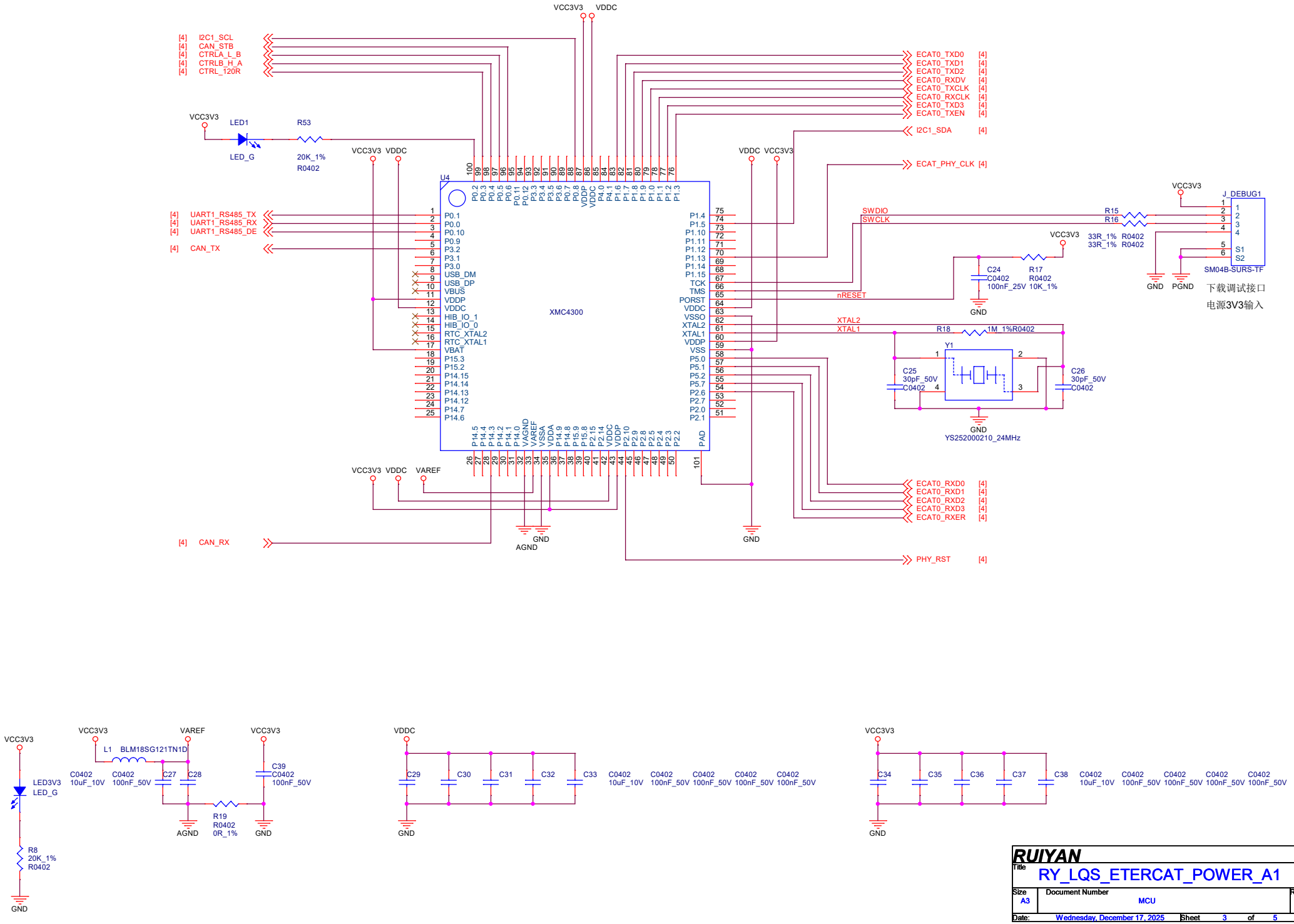

RUIYAN		
Title	RY_LQS_ETERCAT_POWER_A1	
Size A3	Document Number MCU	Rev
Date: Wednesday, December 17, 2025	Sheet 3 of 5	

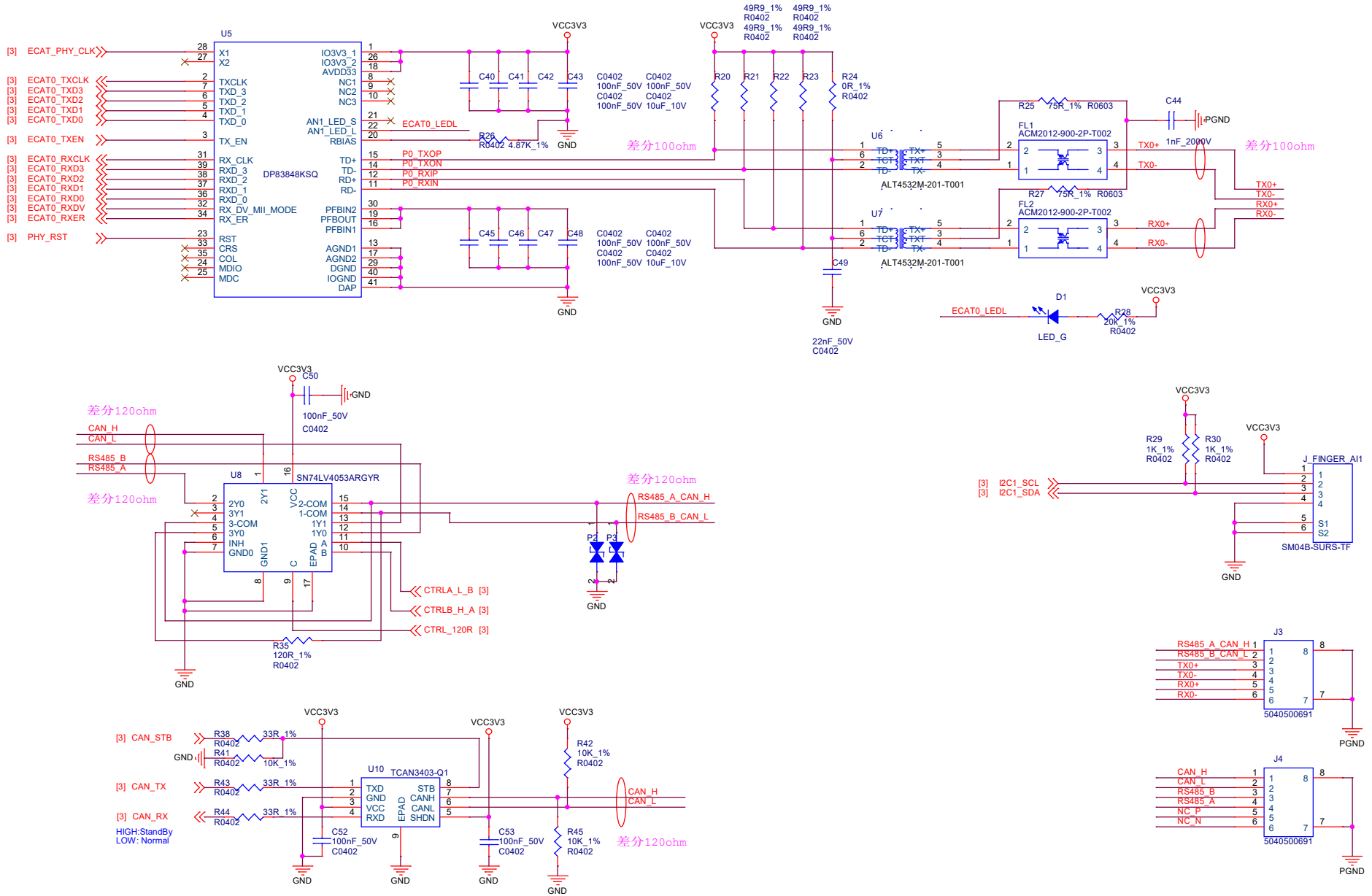

RUIYAN			
Title	RY_LQS_ETERCAT_POWER_A1		
Size A3	Document Number EtherCAT		Rev
Date: Tuesday, December 09, 2025	Sheet 4 of 5		

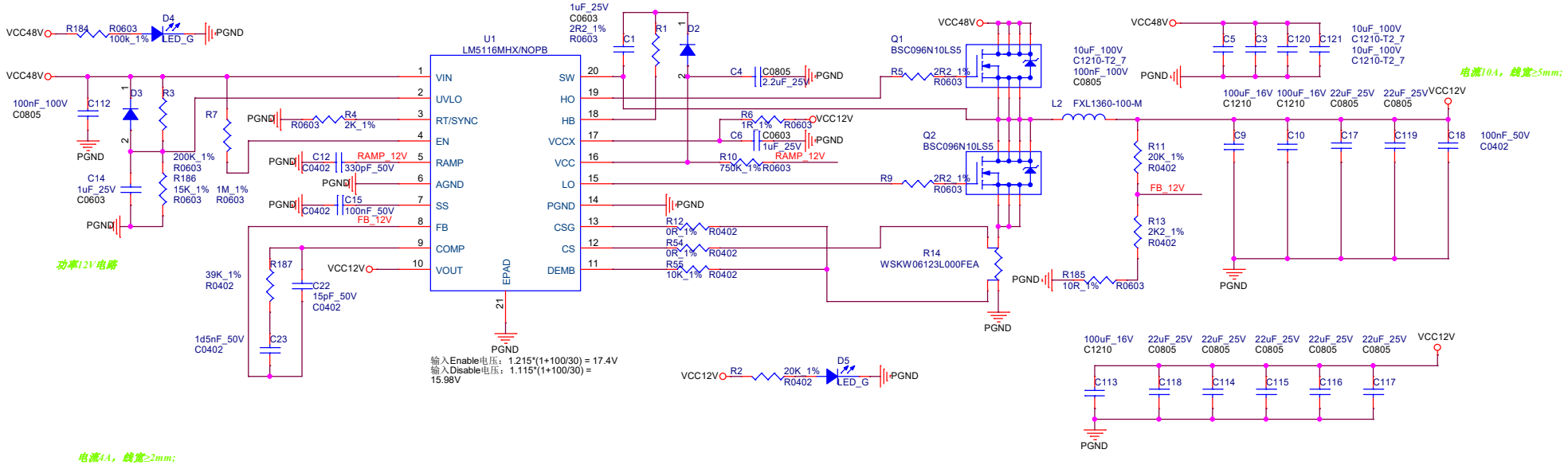

电源4A，线宽≥2mm;

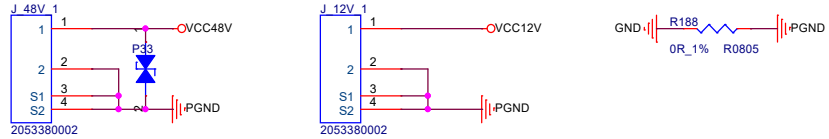

制作为贴片焊盘：
长：3MM
宽：3MM

H1 H2

RUIYAN		
Title	RY_LQS_ETERCAT_POWER_A1	
Size A3	Document Number POWER	Rev
Date: Wednesday, December 10, 2025	Sheet 5 of 5	