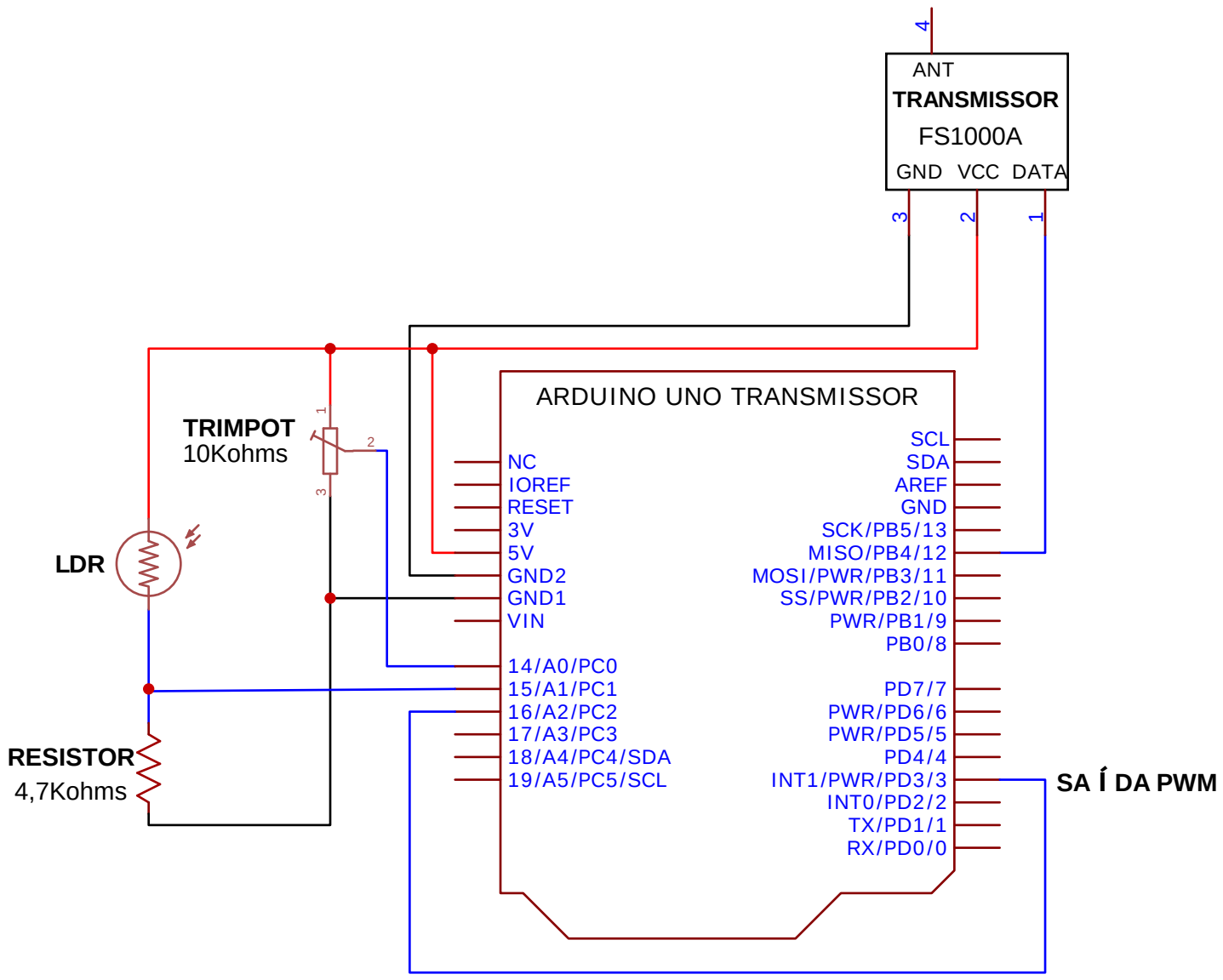

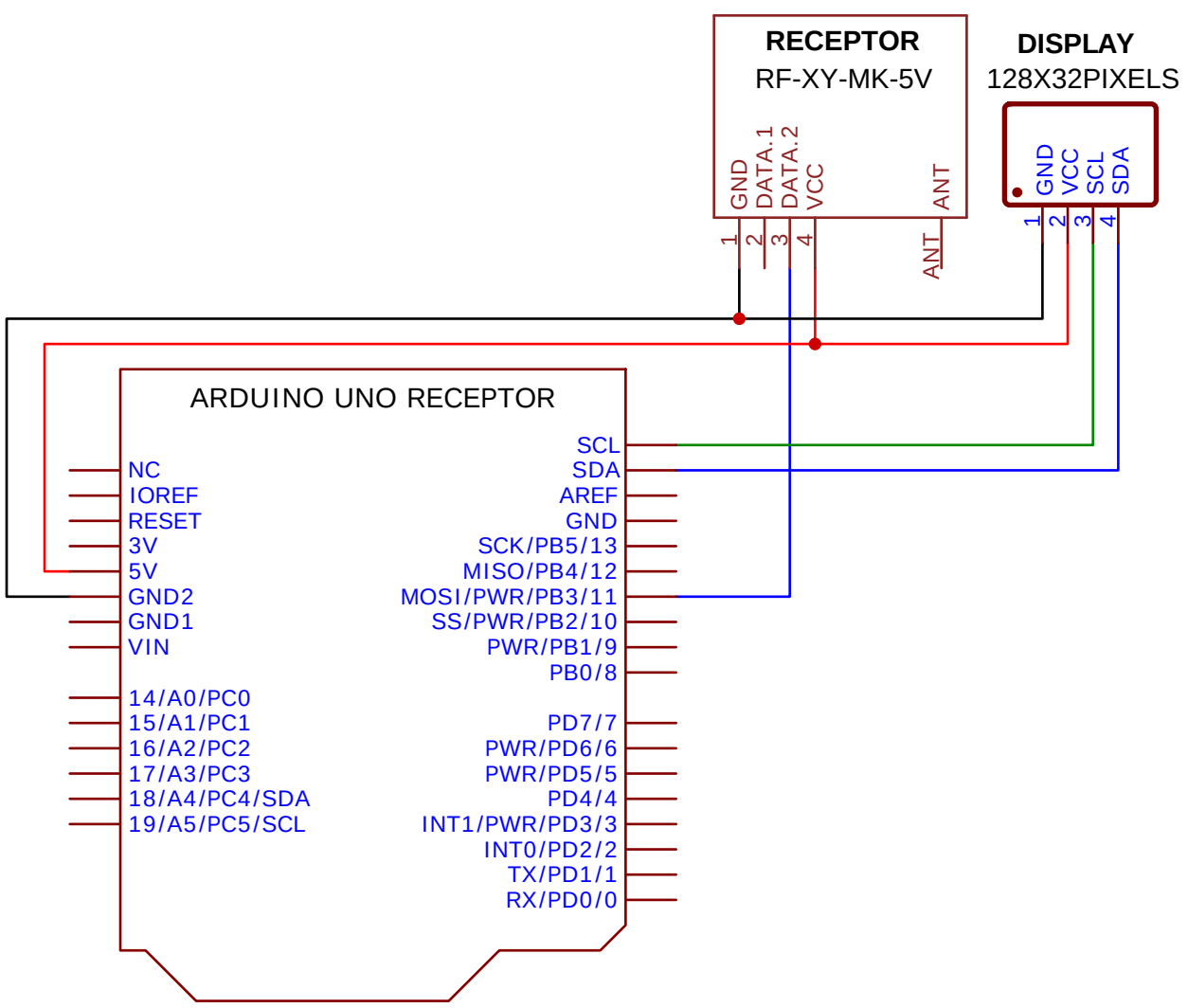

TITLE: Projeto Final - Arduino		REV: 1.0
WELLINTO WEB	Company: WELLINTOWEB	Sheet: 1/1
	Date: 2023-02-11 Drawn By: Wellington Costa	