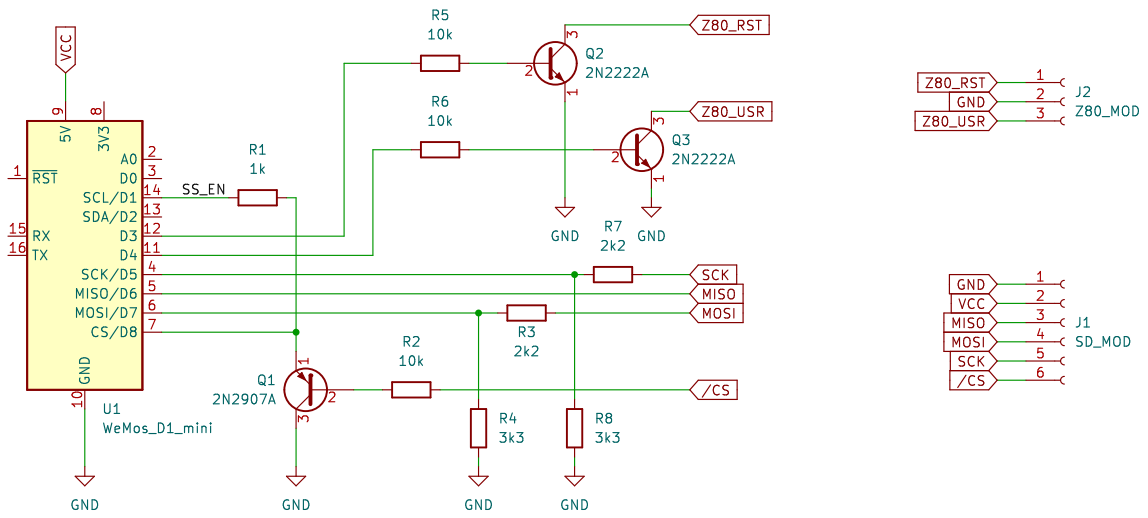

Sheet: /
File: WiFi-VirtDisk-WemosD1mini.kicad_sch

Title: WiFi-VirtDisk for Z80-MBC2

Size: A4	Date: **15.09.2025 – Copyright (c) Welzel-Online**	**Rev:**
KiCad E.D.A. kicad 7.0.11		Id: 1/1