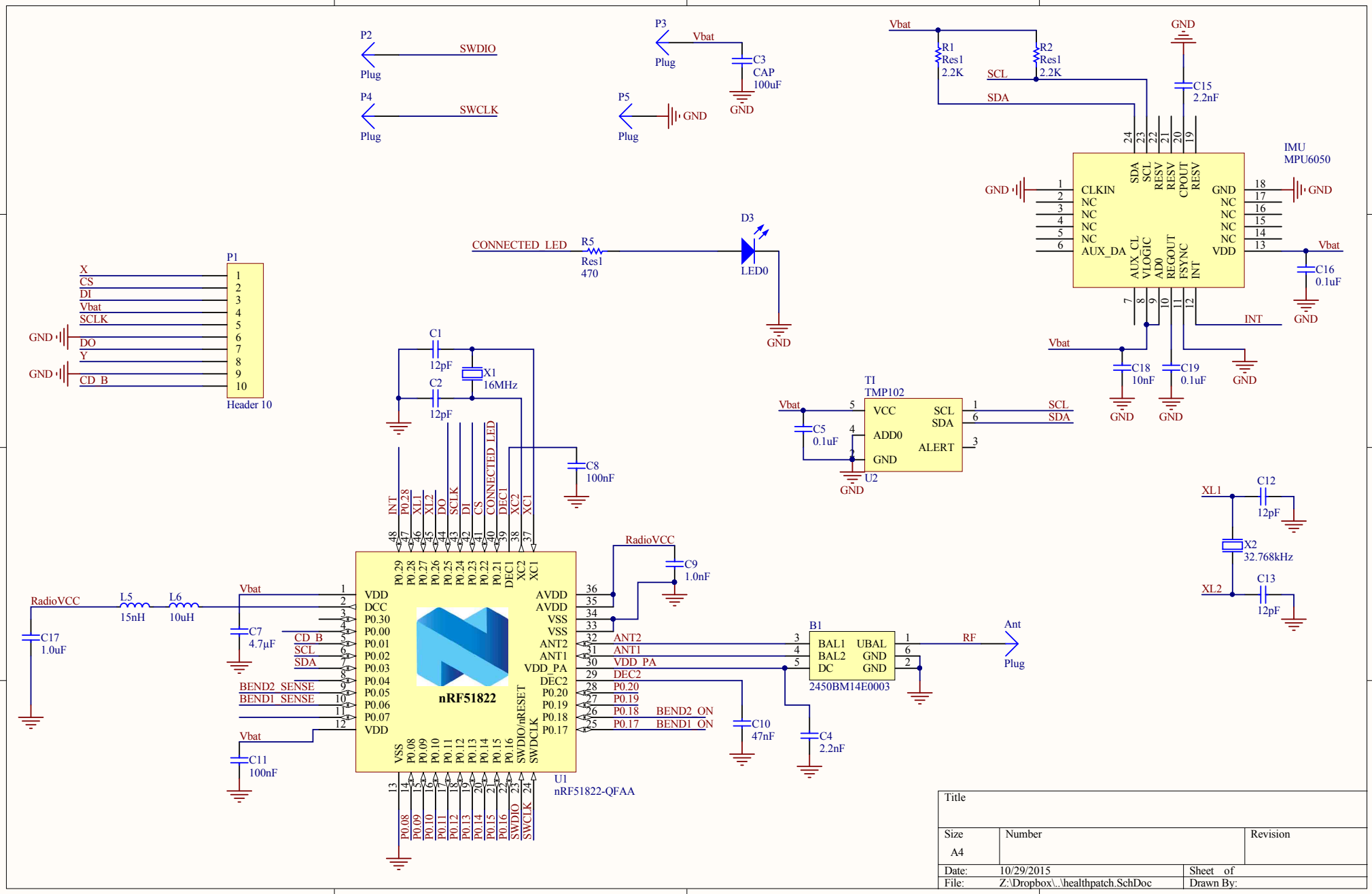

Title		
Size A4	Number	Revision
Date: 10/29/2015		Sheet of
File: Z:\Dropbox\..\healthpatch.SchDoc		Drawn By:

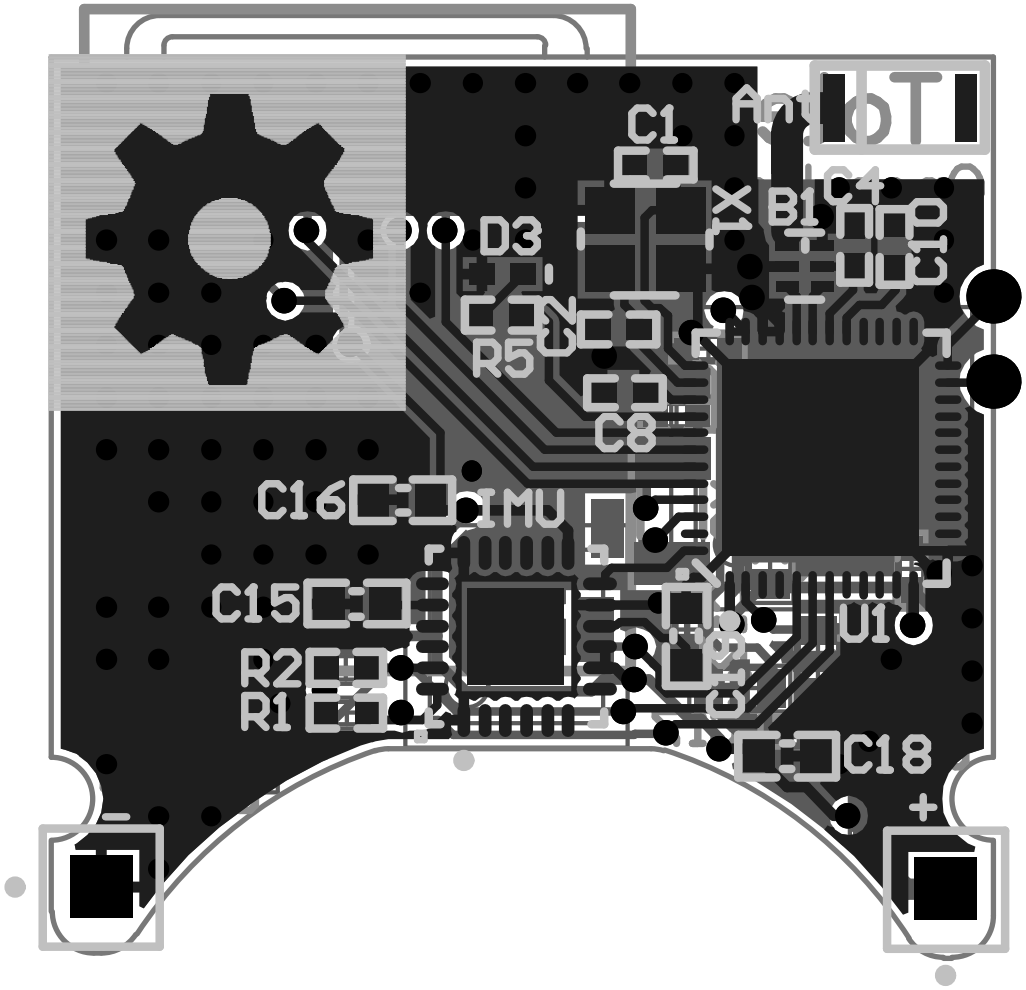
C1
D3
B1
R5
C8
C16
IMU
C15
R2
R1
U1
C18