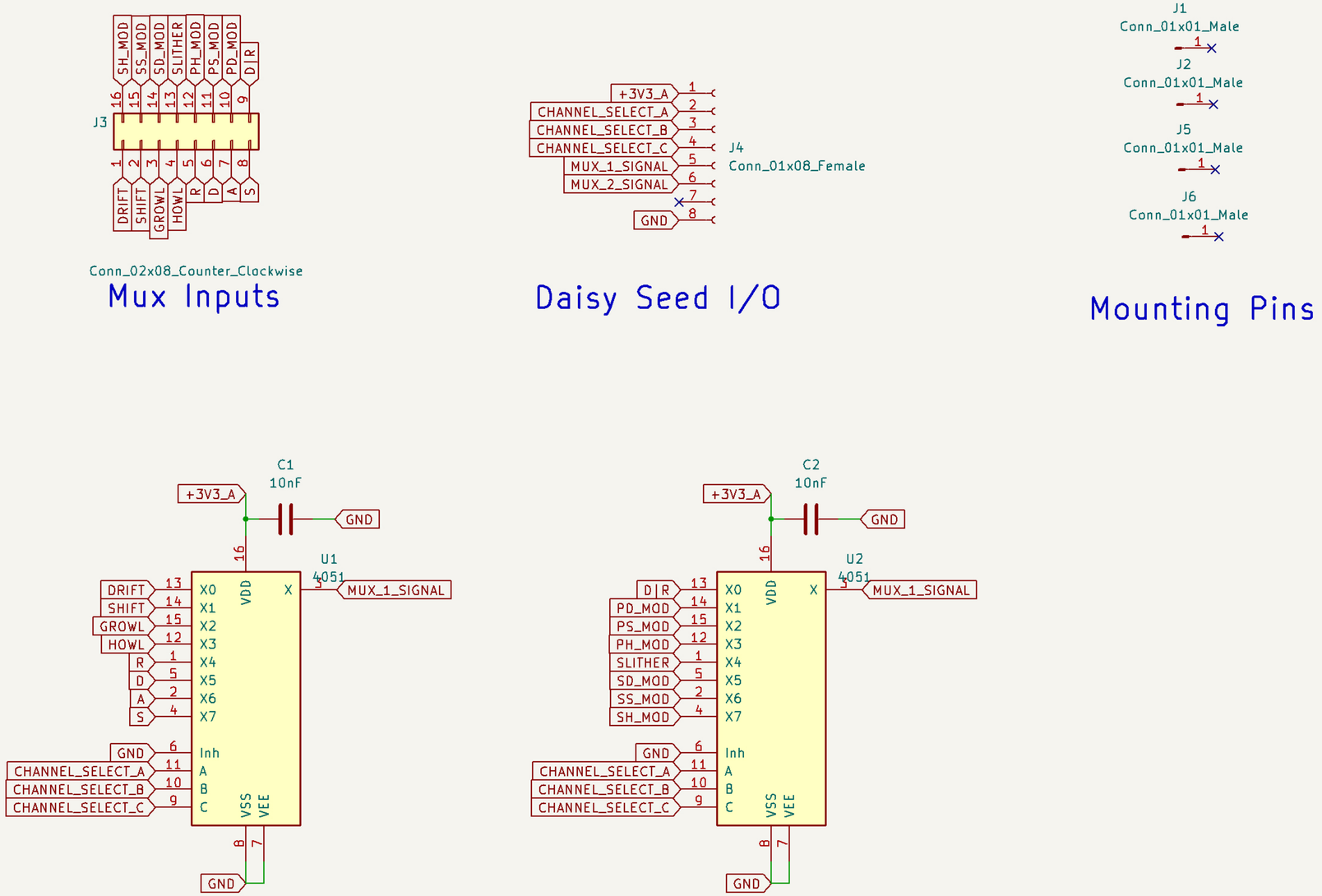

Song Naga

Sheet: /

File: takshaka-mux-board.kicad_sch

Title: Simple Multiplexer

Size: A4	Date: 2022-09-21	Rev: v0.2
KiCad E.D.A. kicad (6.0.6)		Id: 1/1