ADC

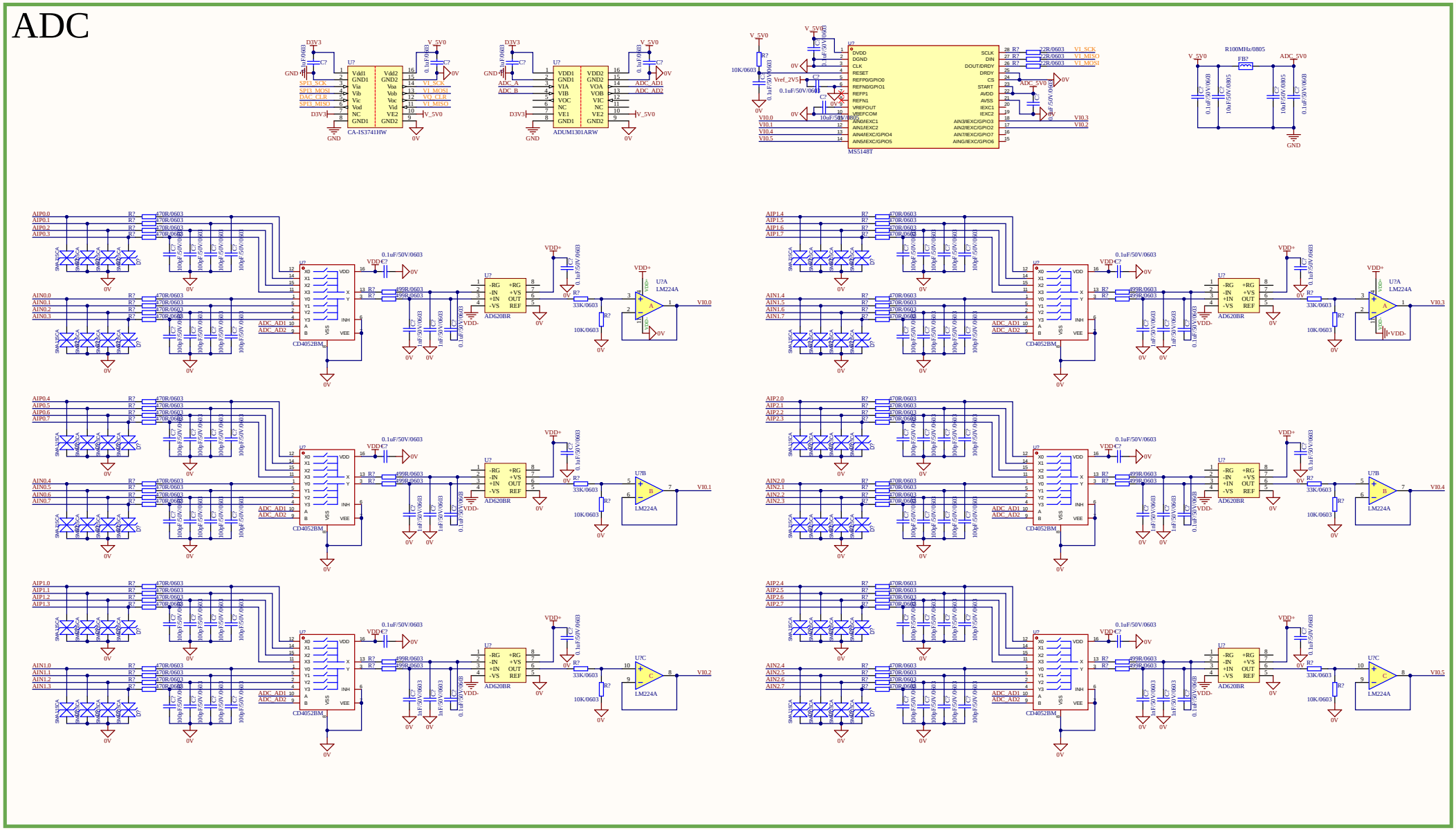

Title		
Size A2	Number	Revision
Date: 2-14-2026	Sheet of	
File: F:\Design\...\HF-VCU02M-AI-V1.0.SchDoc	Drawn By:	

DAC

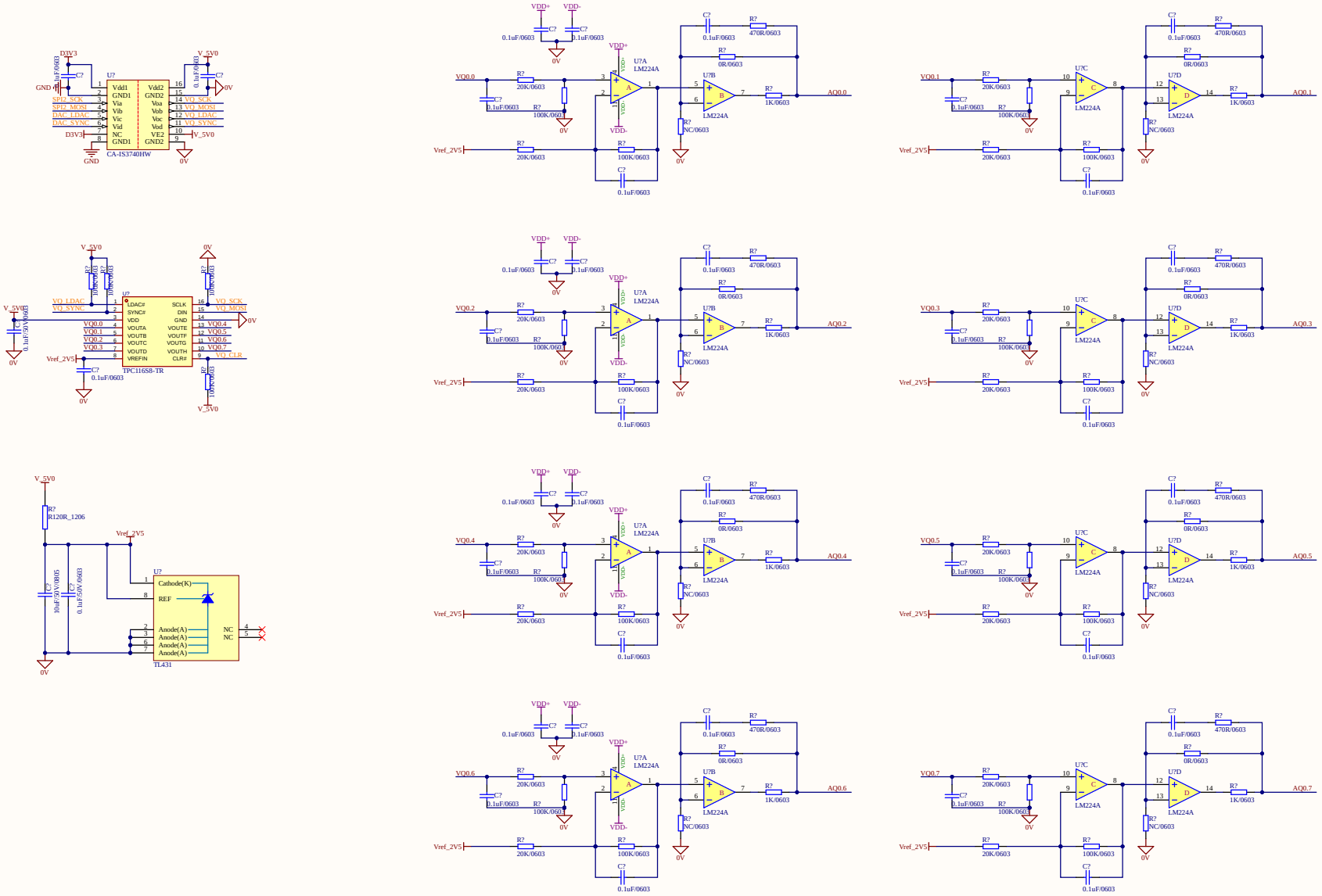

Title		
Size A2	Number	Revision
Date: 2-14-2026	Sheet of	
File: F:\Design\...\HF-VCU02M-AO-V1.0.SchDoc	Drawn By:	

RS485

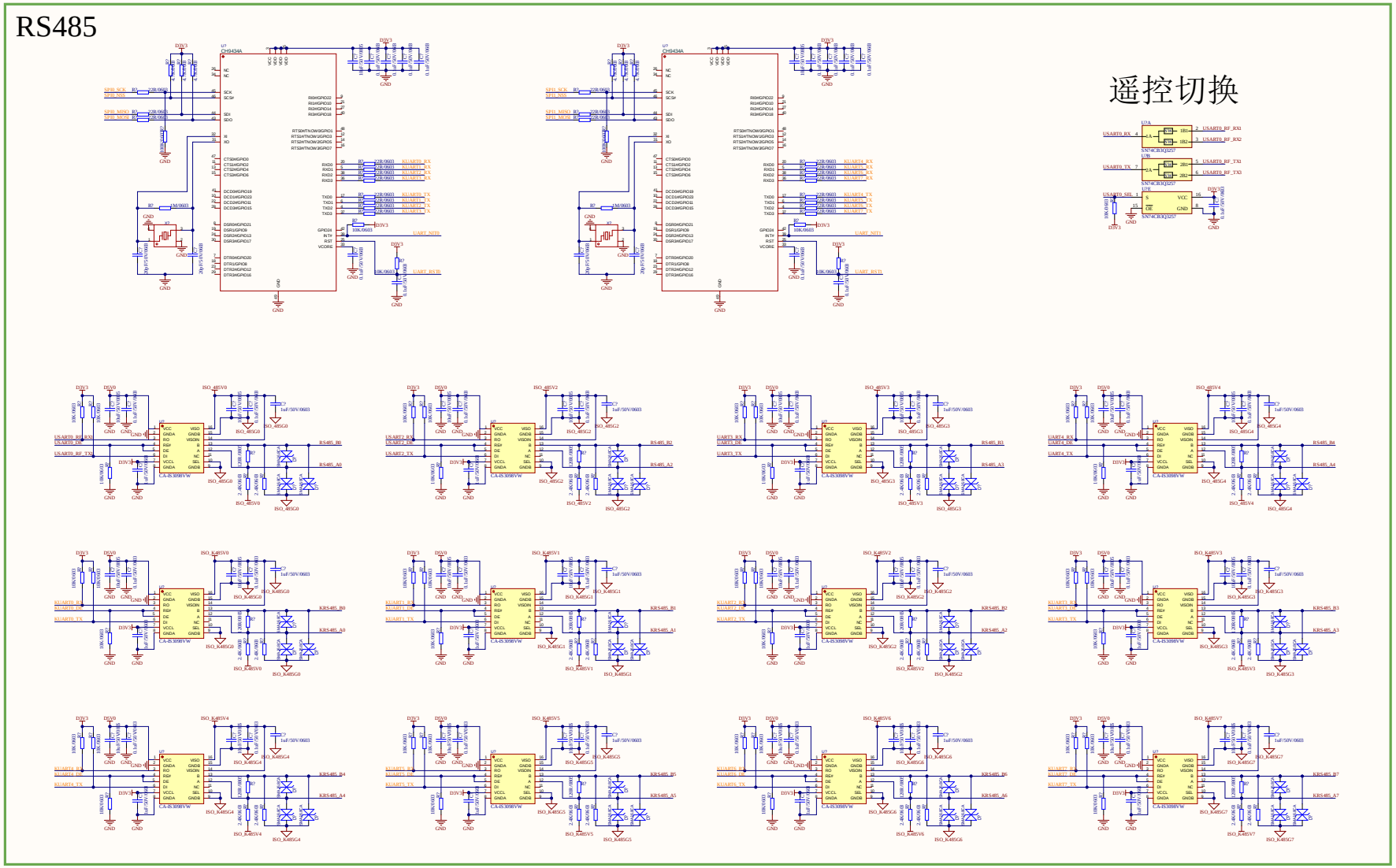

RS232

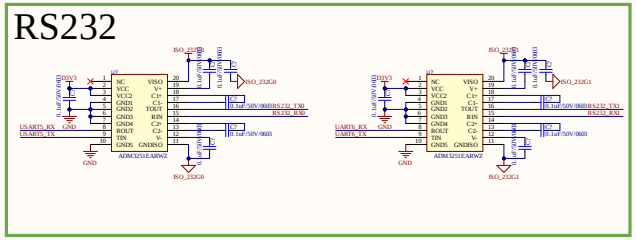

CAN

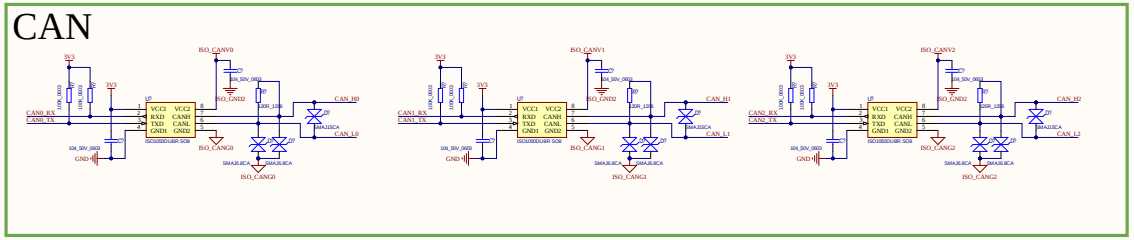

Title		
Size A1	Number	Revision
Date: 2-14-2026	Sheet of	
File: F:\Design\...\HP-VC1102M-COM-V1.0.SchDoc	Drawn By:	

跨板接口

P-TO-M

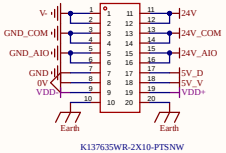

P-TO-M

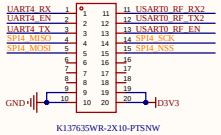

M-TO-C

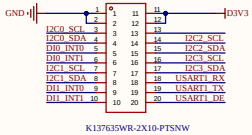

模拟输出

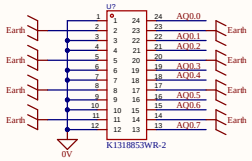

模拟输入接口

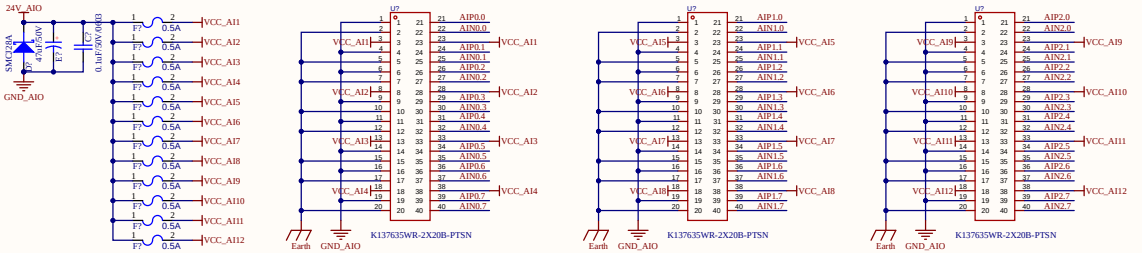

RS232

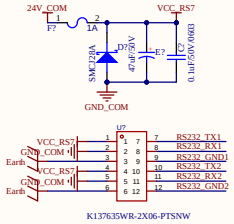

RS485

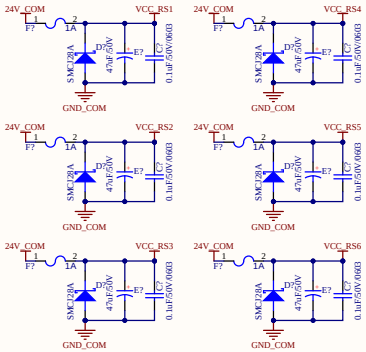

本体

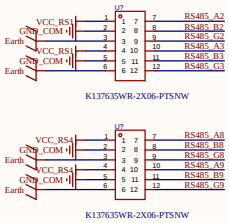

扩展

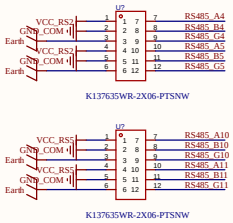

扩展

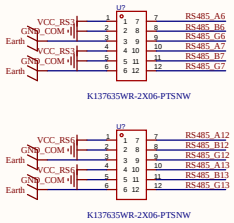

CAN

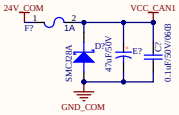

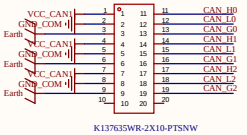

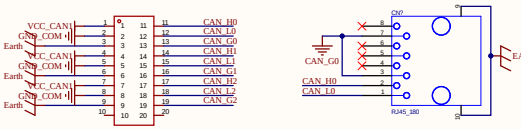

Title		
Size A2	Number	Revision
Date: 2-14-2026	Sheet of	
File: F:\Design\...\HF-VCU02M-CON-V1.0.SchDoc	Drawn By:	

NET0

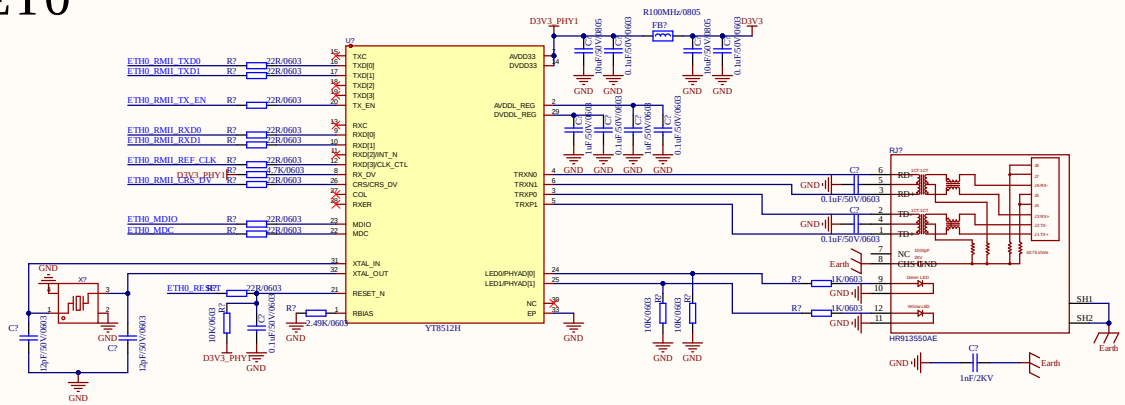

NET1

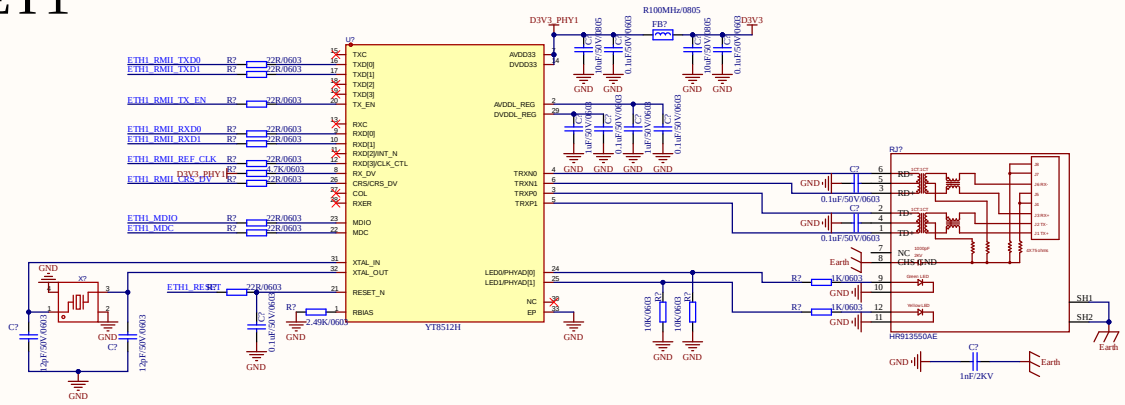

Title		
Size A2	Number	Revision
Date: 2-14-2026	Sheet of	
File: F:\Design\...\HF-VCU02M-ENET-V1.0.SchDoc	Drawn By:	

资源分配

串口分配：
USART0：RS485/遥控器
USART1：RS485/触摸屏
USART2：RS485
UART3：RS485
UART4：RS485
USART5：RS232
UART6：RS232
UART7：4G
SPI分配：
OSPIM_P0：EEPROM
OSPIM_P1：FLASH
SPI0：串口扩展1
SPI1：串口扩展2
SPI2：DAC
SPI3：ADC
SPI4：板载WIFI
SPI5：端口复用，不可用
I2C分配
I2C0：数字输入1
I2C1：数字输入2
I2C2：数字输出1
I2C3：数字输出2
CAN分配
CAN0：RJ45+通用接口
CAN1：通用接口
CAN2：通用接口
ENET分配
ENET0：EtherNet
ENET1：EtherCAT
USB分配：
USB0：调试
USB1：NC

MCU

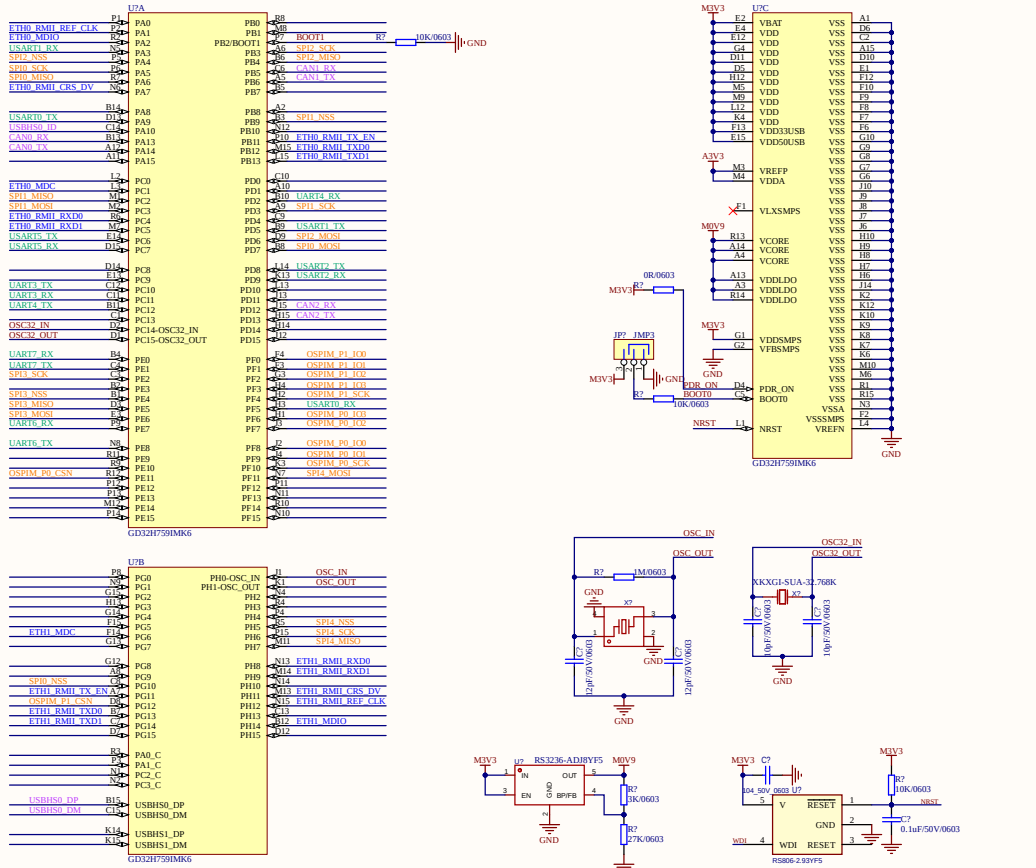

EEPROM

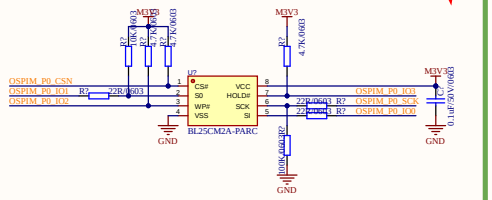

NAND FLASH

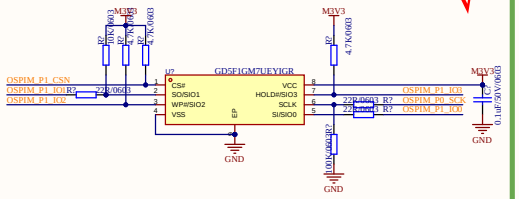

SWD

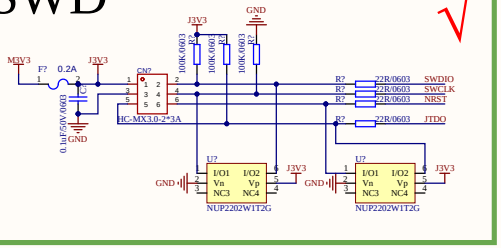

USB

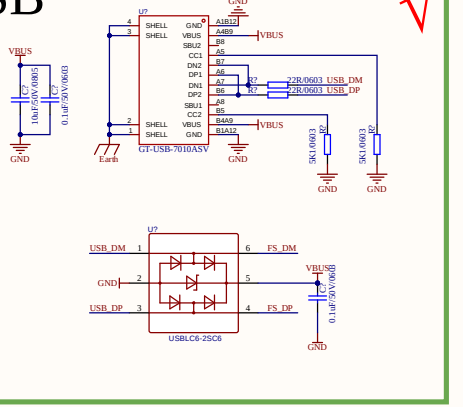

LDO

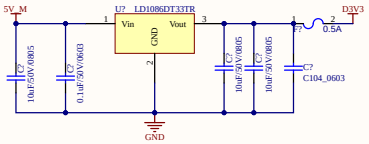

LED

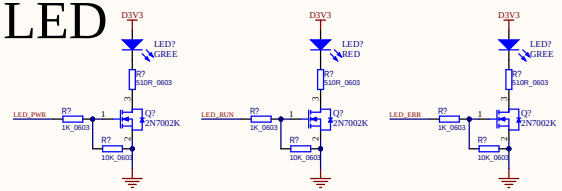

Title		
Size A2	Number	Revision
Date: 2-14-2026	Sheet of	
File: F:\Design\...\HF-VCU02M-MCU-V1.0.SchDoc	Drawn By:	