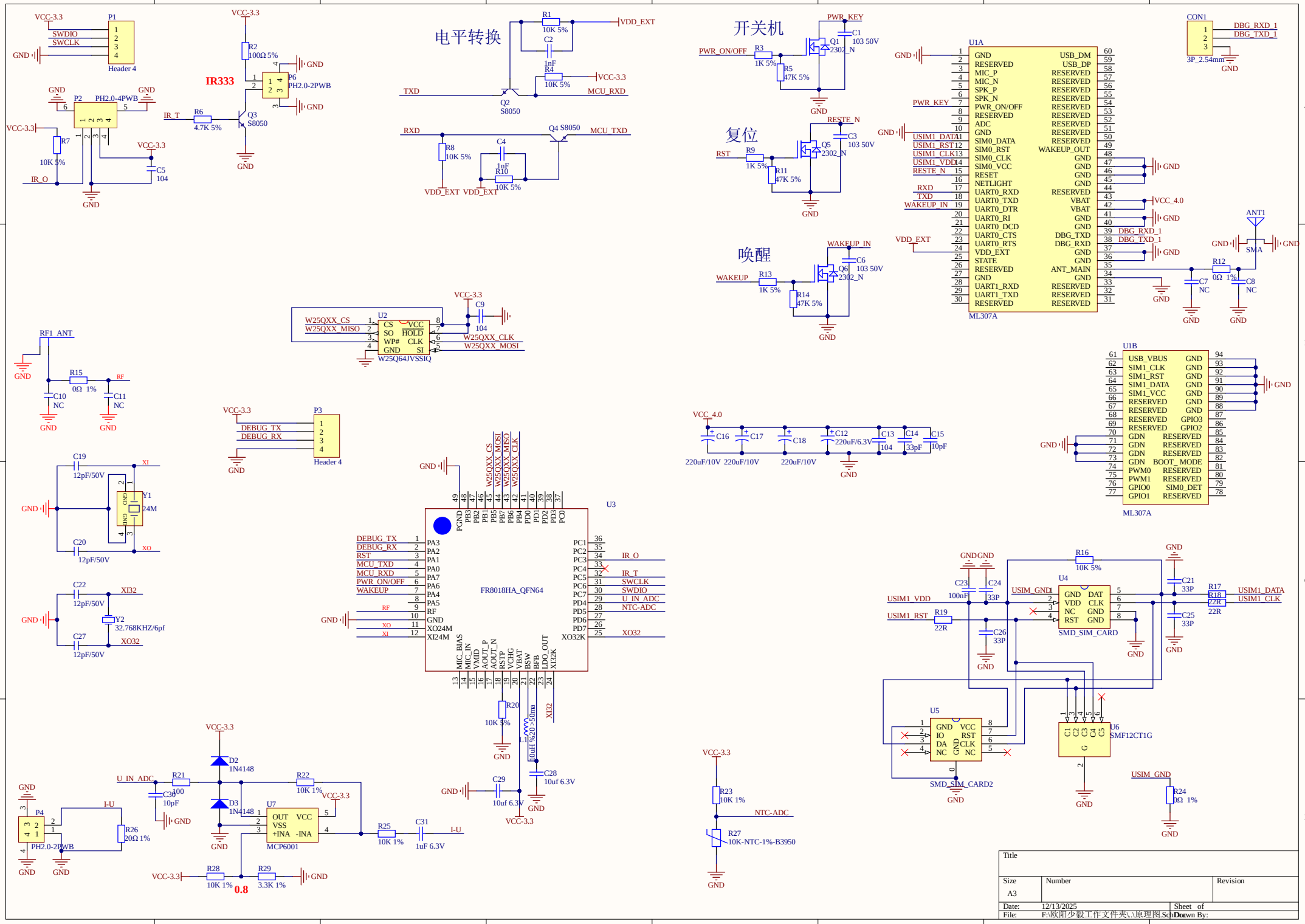
电平转换
开关机
复位
唤醒
IR333
FR8018HA_QFN64
ML307A
SMD_SIM_CARD
SMD_SIM_CARD2
MCP6001
SMF12CT1G
Header 4
PH2.0-4PWB
PH2.0-2PWB
3P_2.54mm
SMA
W25Q64JVSSIQ
Title
Size
A3
Number
Revision
Date: 12/13/2025
Sheet of
File: F:\欧阳少毅工作文件夹\..\原理图.SchDoc
Drawn By:

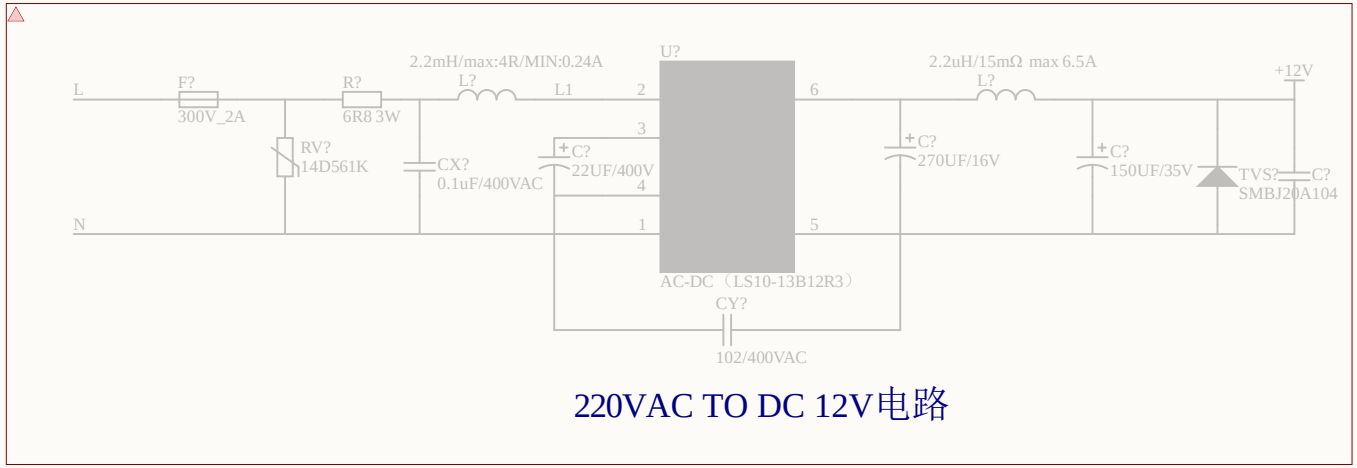

220VAC TO DC 12V电路

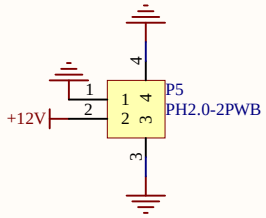

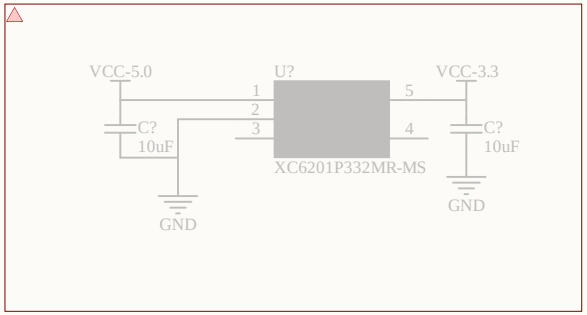

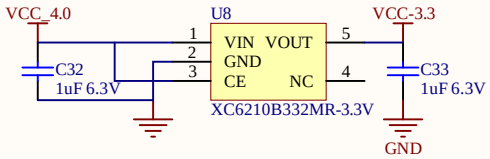

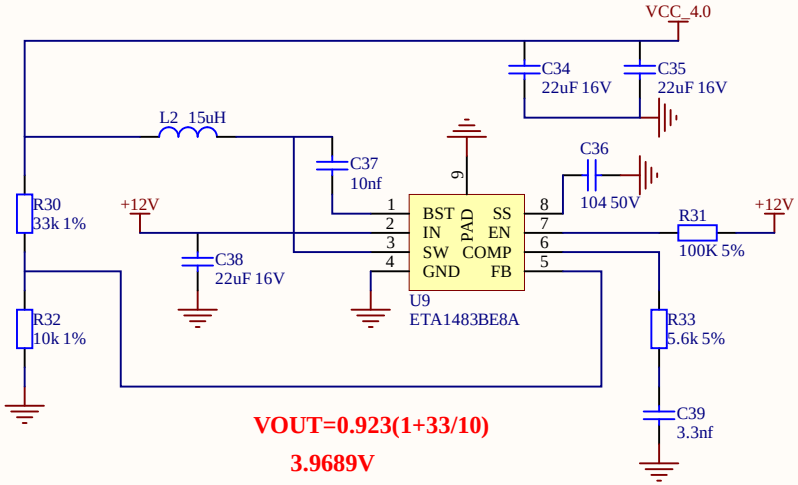

VOUT=0.923(1+33/10)

3.9689V

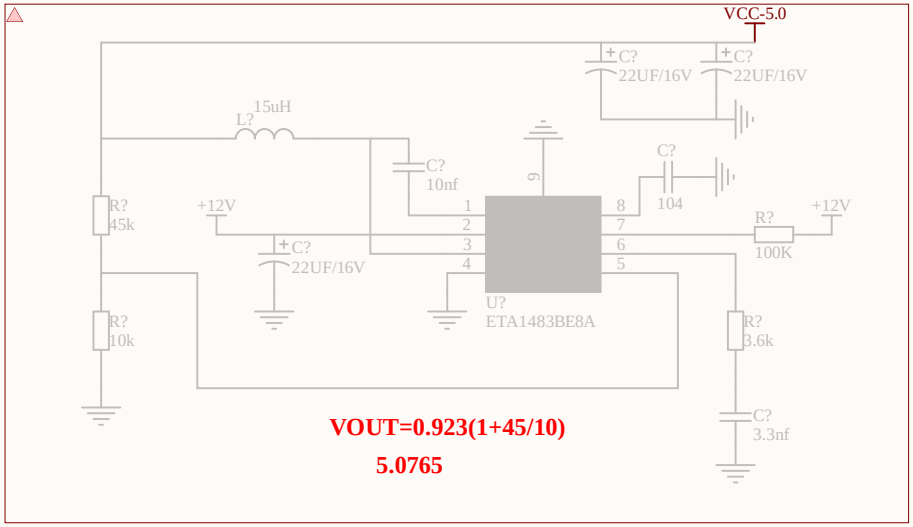

VOUT=0.923(1+45/10)

5.0765

Title		
Size A4	Number	Revision
Date: 12/13/2025		Sheet of
File: F:\欧阳少毅工作文件夹\..\电源电路.SchDoc		Drawn By: