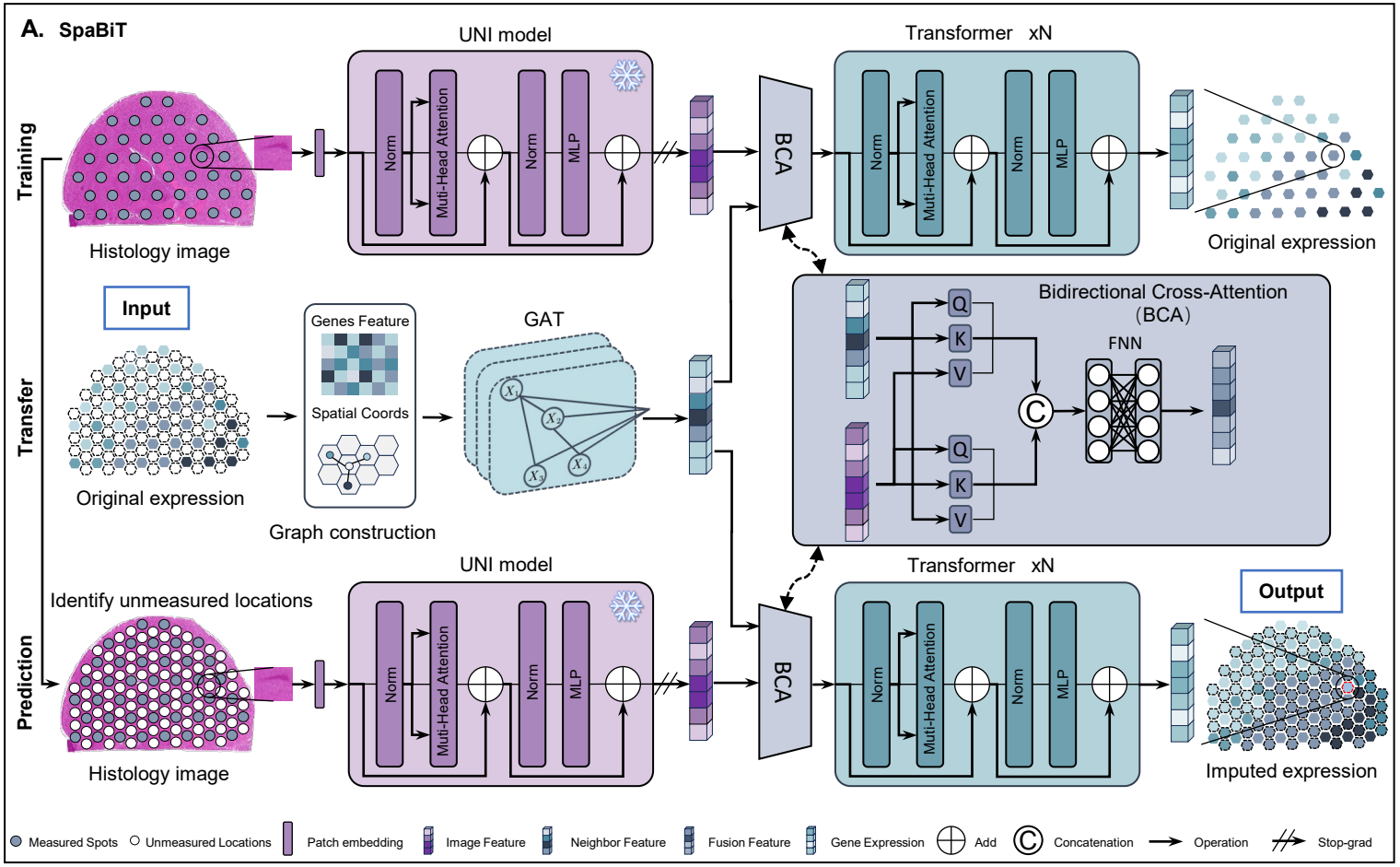
A. SpaBiT
Training
Transfer
Prediction
UNI model
Transformer xN
Norm
Muti-Head Attention
MLP
BCA
Histology image
Original expression
Input
Genes Feature
Spatial Coords
GAT
Graph construction
Bidirectional Cross-Attention (BCA)
Q
K
V
FNN
Identify unmeasured locations
Output
Imputed expression
Measured Spots
Unmeasured Locations
Patch embedding
Image Feature
Neighbor Feature
Fusion Feature
Gene Expression
Add
Concatenation
Operation
Stop-grad

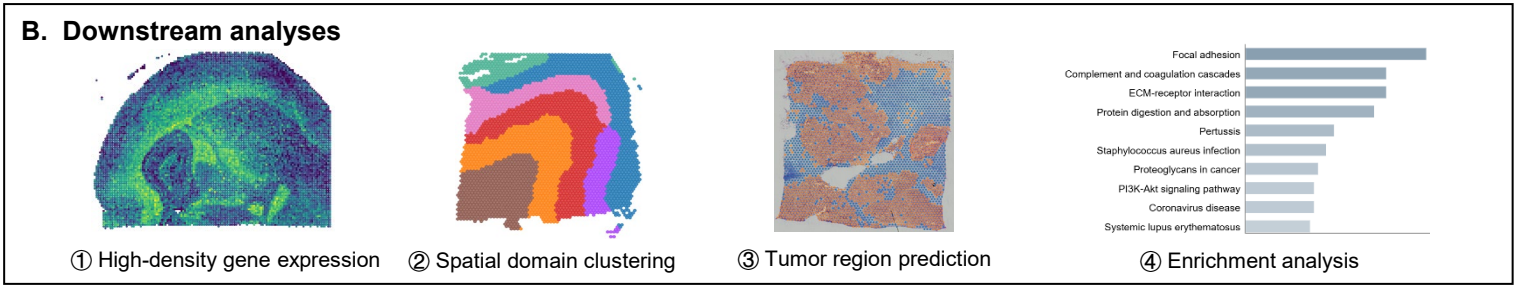
B. Downstream analyses
Focal adhesion
Complement and coagulation cascades
ECM-receptor interaction
Protein digestion and absorption
Pertussis
Staphylococcus aureus infection
Proteoglycans in cancer
PI3K-Akt signaling pathway
Coronavirus disease
Systemic lupus erythematosus
① High-density gene expression
② Spatial domain clustering
③ Tumor region prediction
④ Enrichment analysis