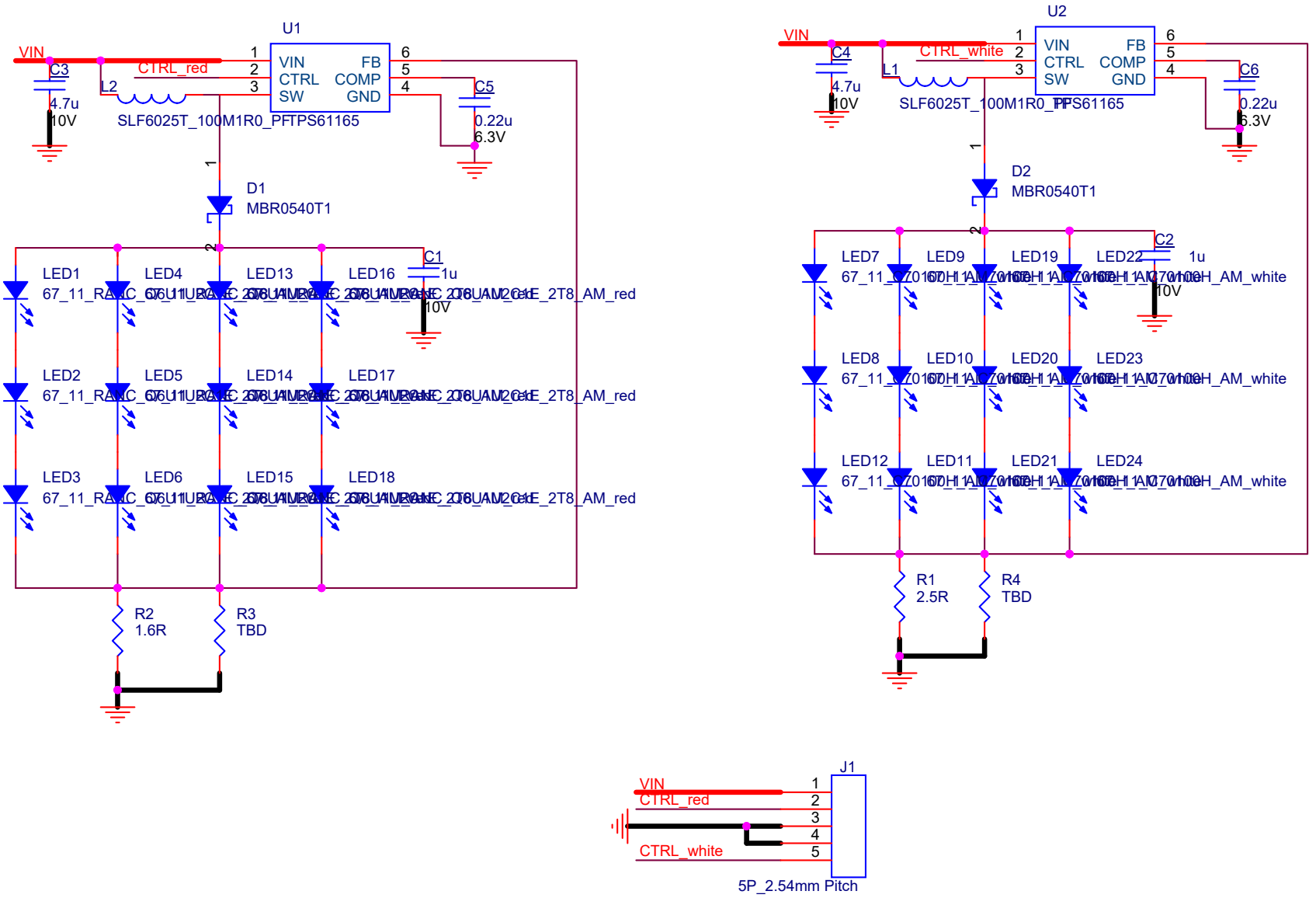

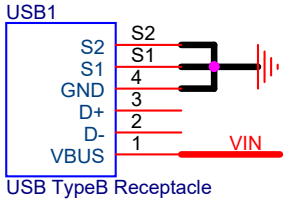

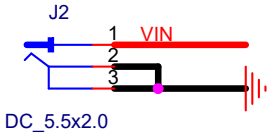

Title <Title>		
Size A	Document Number <Doc>	Rev <RevCode>
Date: Friday, September 14, 2018	Sheet 1 of 1	