CAN Bus Arbitration Method

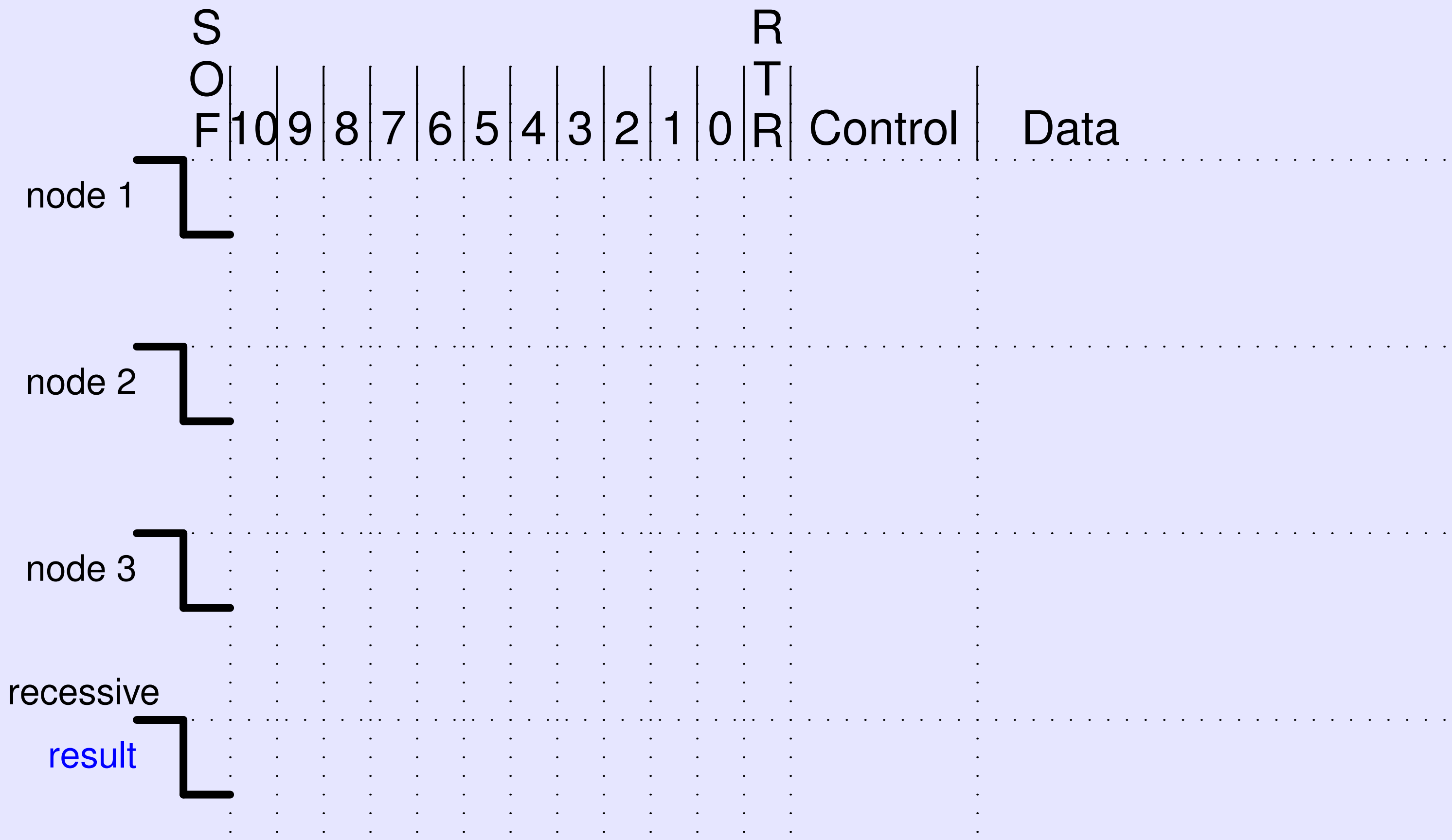
SOF
10
9
8
7
6
5
4
3
2
1
0
RTR
Control
Data
node 1
node 2
node 3
recessive
result

CAN Bus Arbitration Method

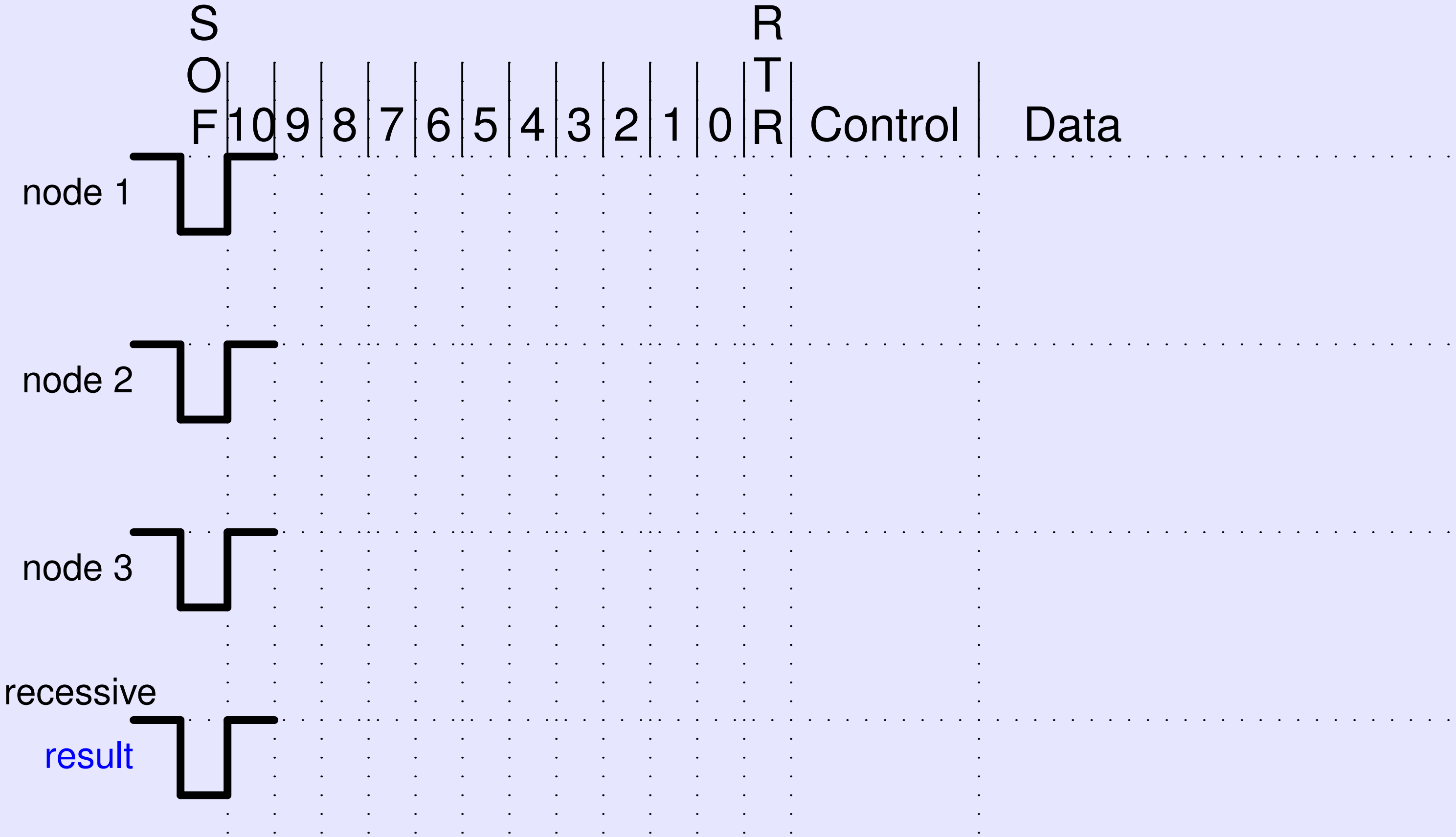
SOF
10
9
8
7
6
5
4
3
2
1
0
RTR
Control
Data
node 1
node 2
node 3
recessive
result

>

CAN Bus Arbitration Method

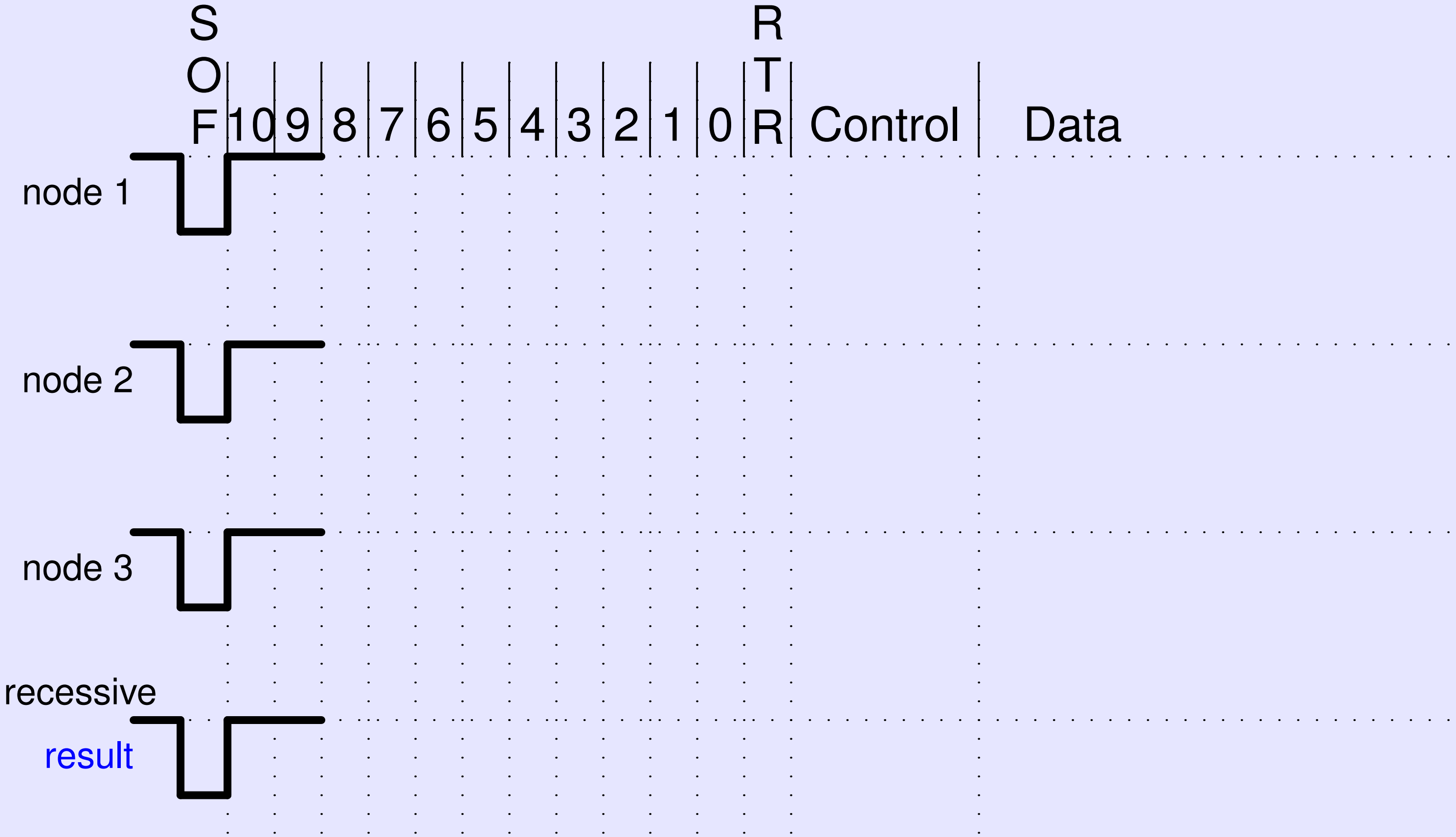
SOF
10
9
8
7
6
5
4
3
2
1
0
RTR
Control
Data
node 1
node 2
node 3
recessive
result

CAN Bus Arbitration Method

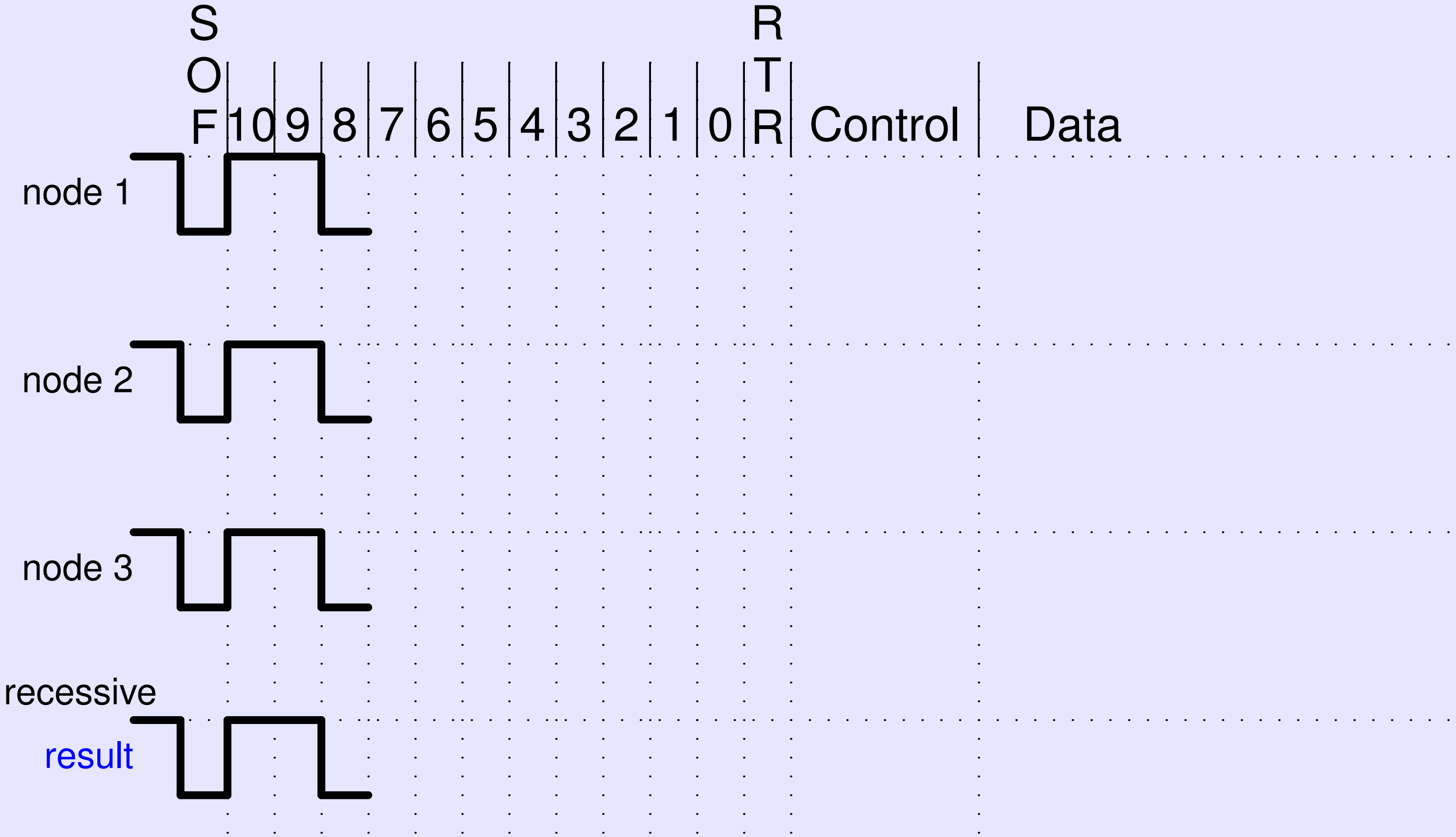
S
O
F
10
9
8
7
6
5
4
3
2
1
0
R
T
R
Control
Data
node 1
node 2
node 3
recessive
result

© 2004 port GmbH

CAN Bus Arbitration Method

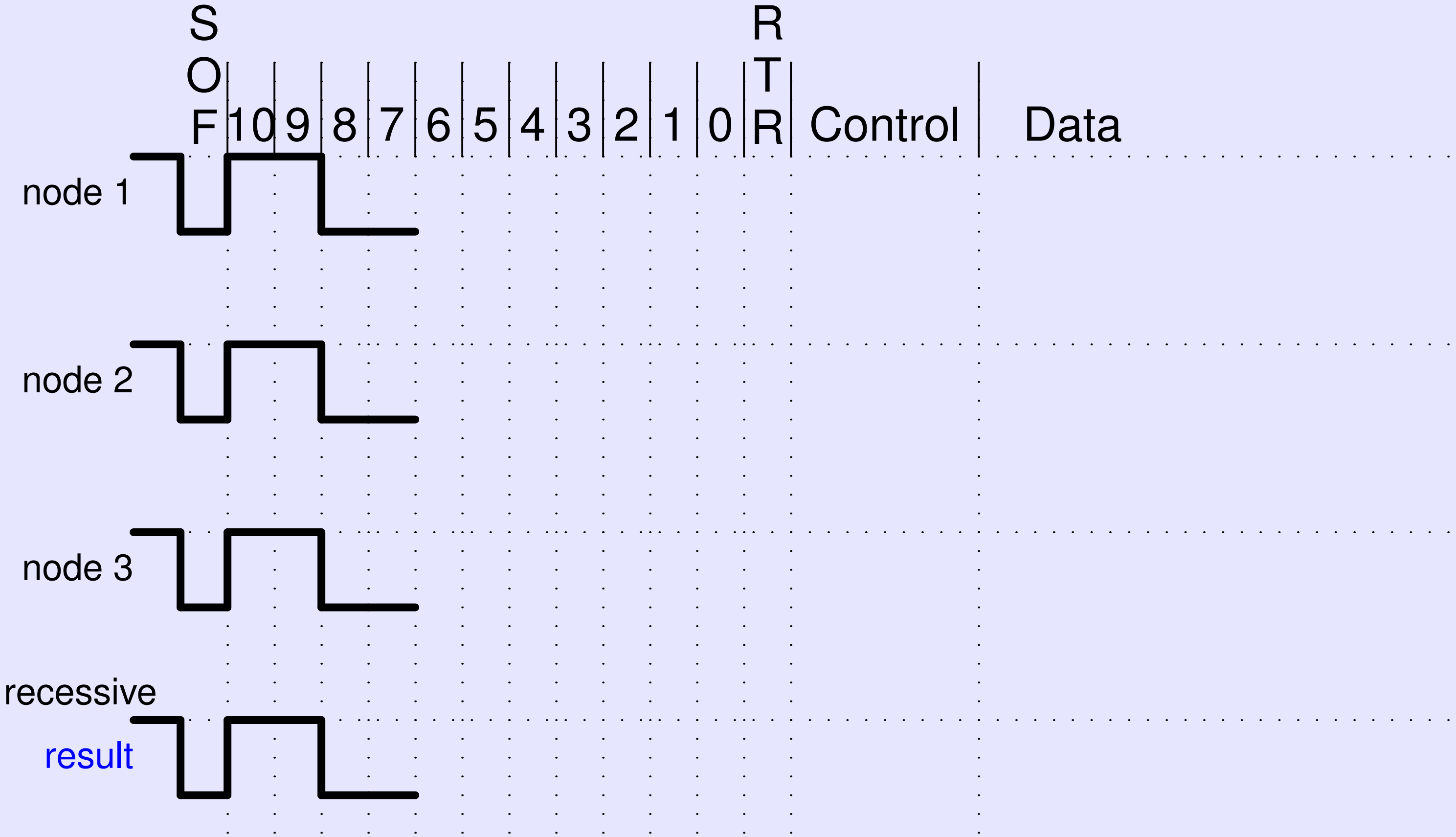
SOF
10
9
8
7
6
5
4
3
2
1
0
RTR
Control
Data
node 1
node 2
node 3
recessive
result

CAN Bus Arbitration Method

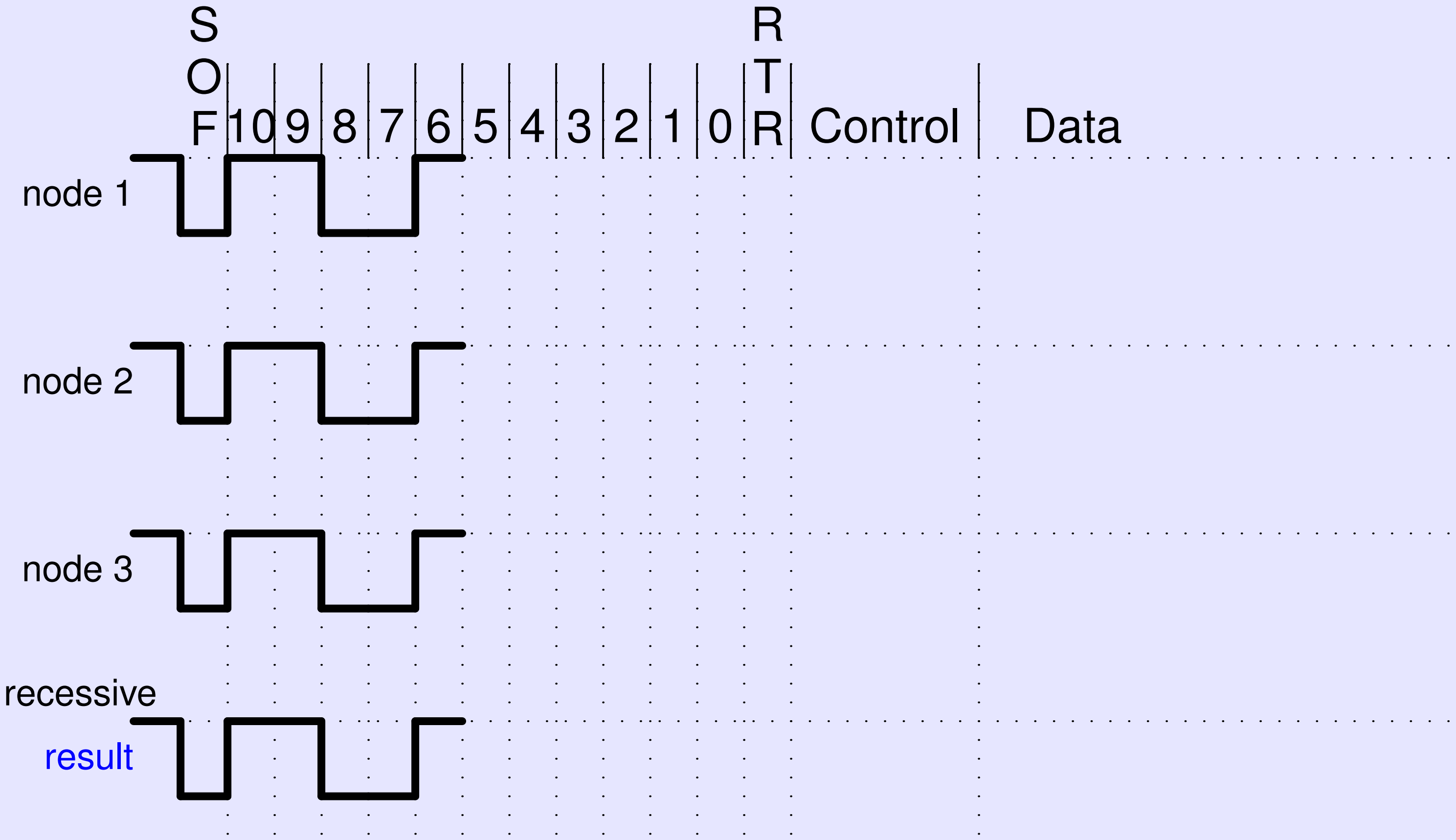
SOF
10
9
8
7
6
5
4
3
2
1
0
RTR
Control
Data
node 1
node 2
node 3
recessive
result

>

CAN Bus Arbitration Method

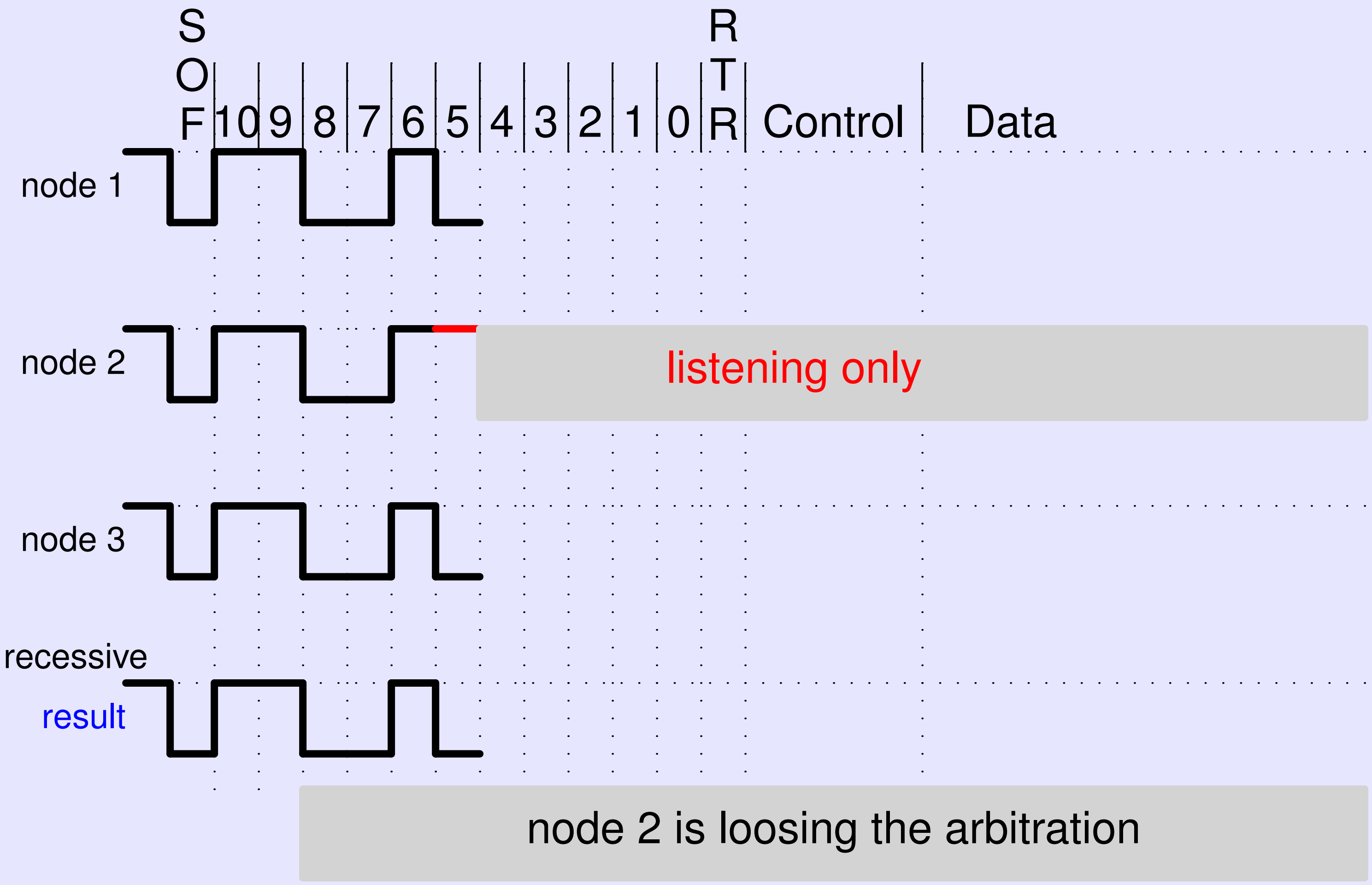
SOF
10
9
8
7
6
5
4
3
2
1
0
RTR
Control
Data
node 1
node 2
node 3
recessive
result

listening only

node 2 is loosing the arbitration

CAN Bus Arbitration Method

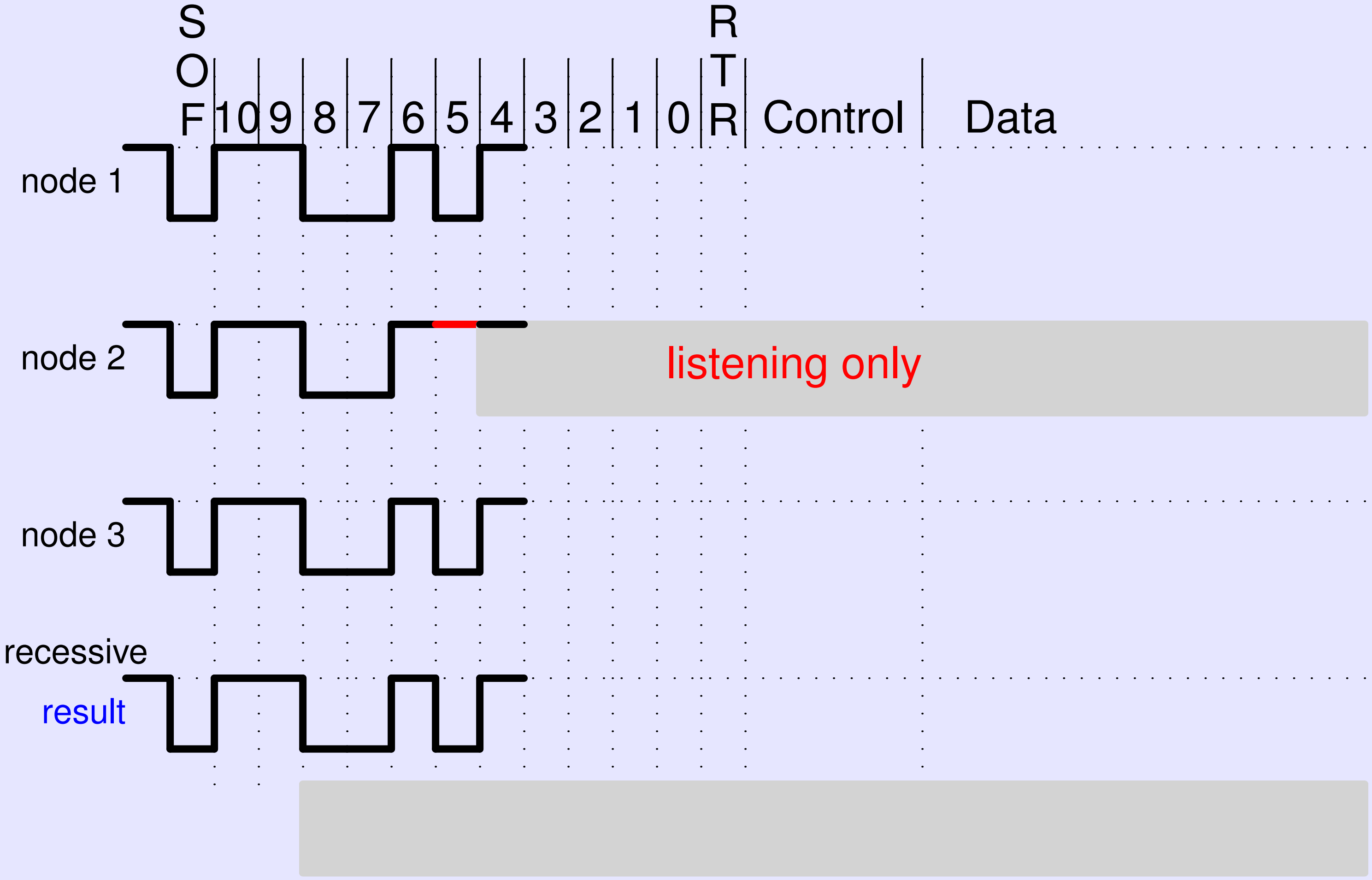
SOF
10
9
8
7
6
5
4
3
2
1
0
RTR
Control
Data
node 1
node 2
listening only
node 3
recessive
result

CAN Bus Arbitration Method

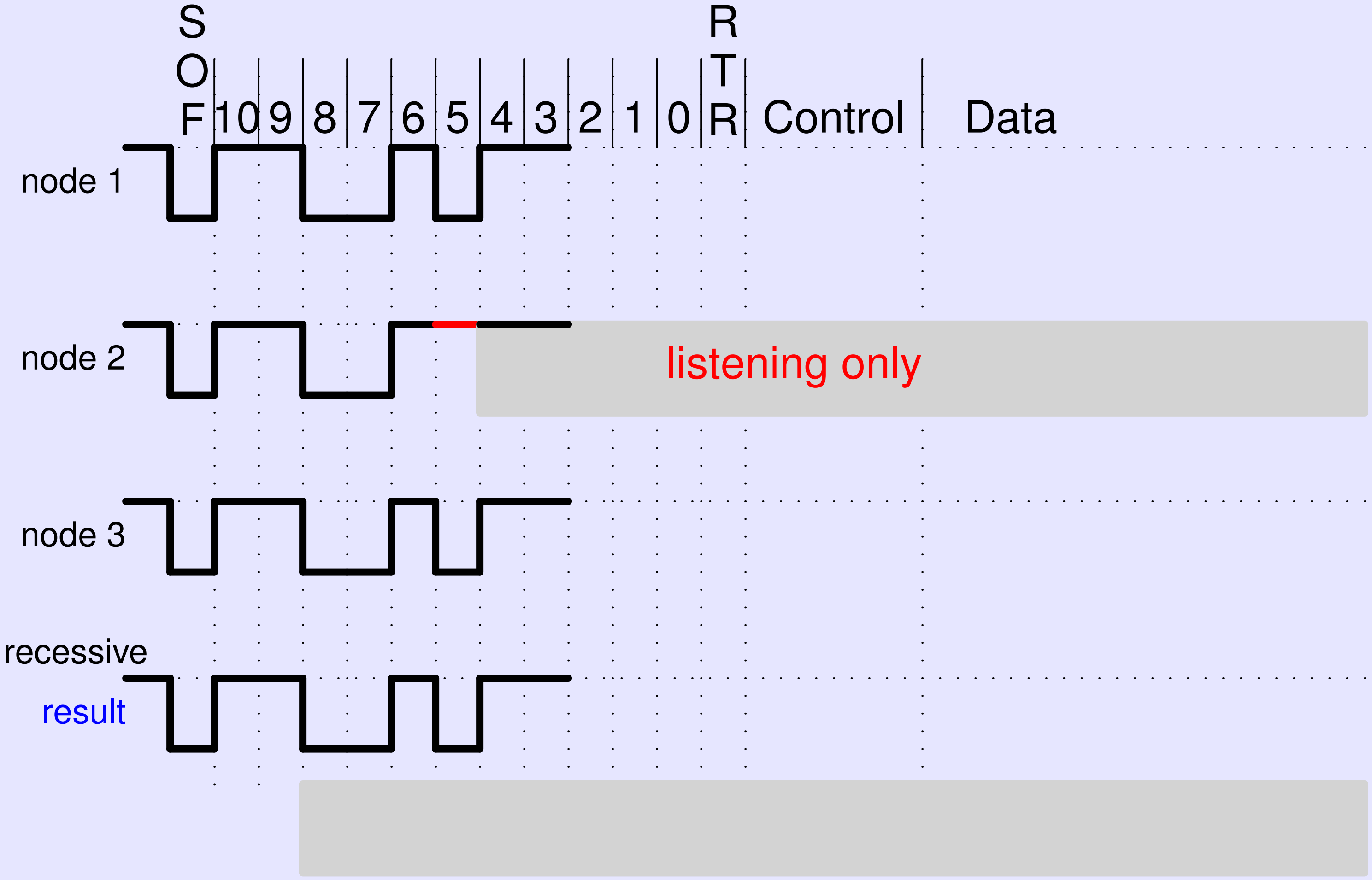
SOF
10
9
8
7
6
5
4
3
2
1
0
RTR
Control
Data
node 1
node 2
listening only
node 3
recessive
result

CAN Bus Arbitration Method

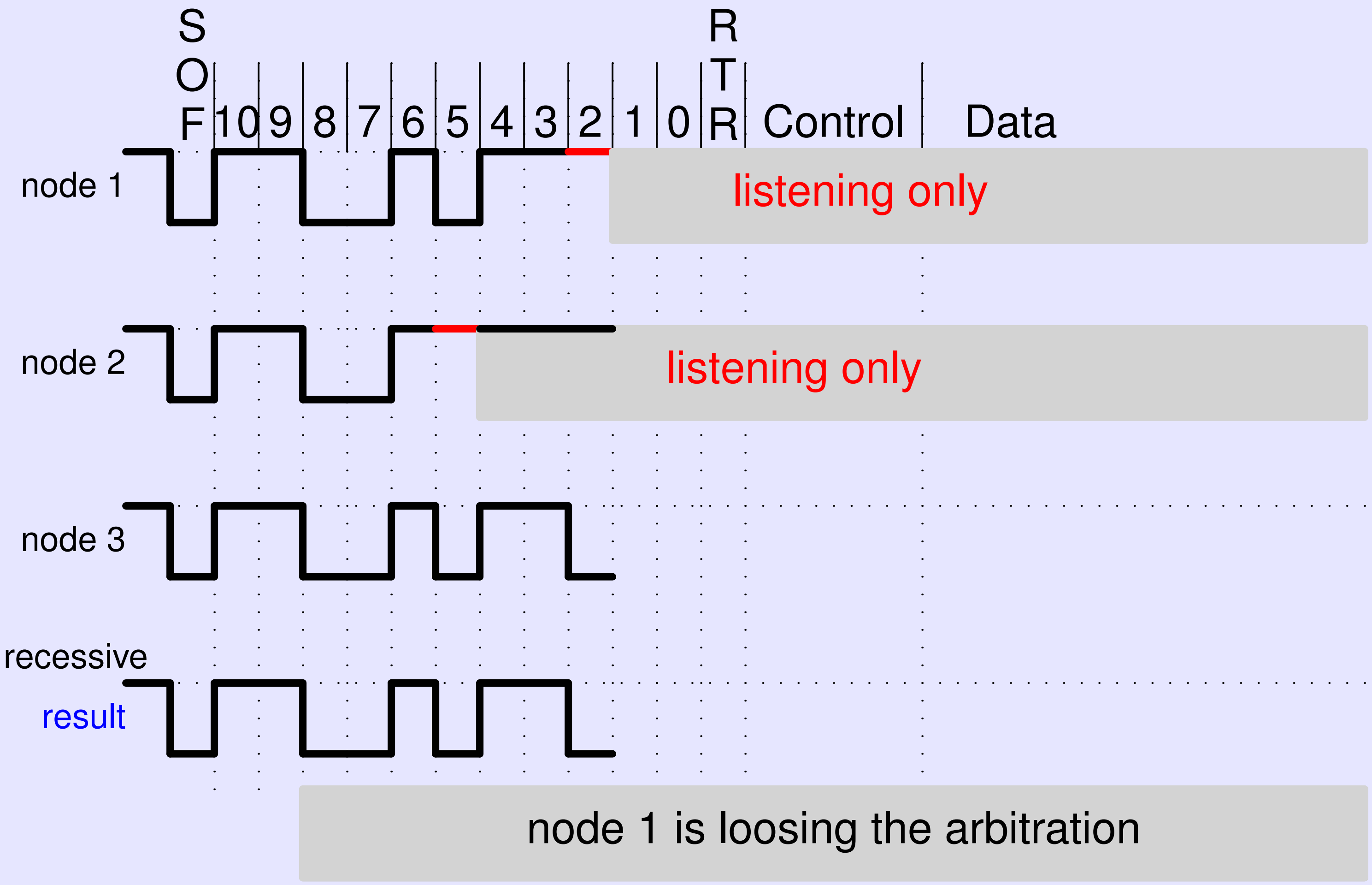
SOF
10
9
8
7
6
5
4
3
2
1
0
RTR
Control
Data
node 1
listening only
node 2
listening only
node 3
recessive
result
node 1 is loosing the arbitration

CAN Bus Arbitration Method

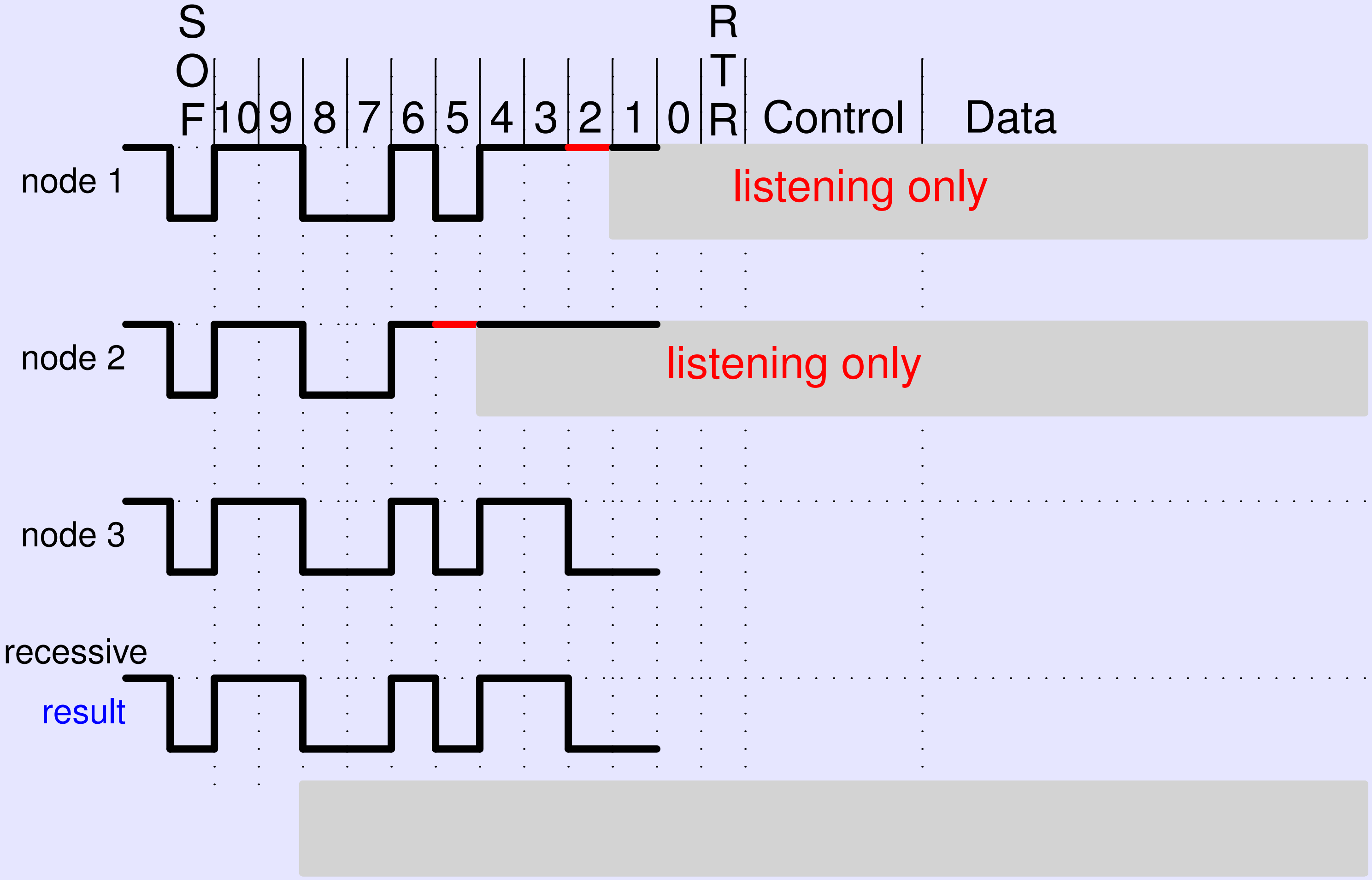
SOF
10
9
8
7
6
5
4
3
2
1
0
RTR
Control
Data
node 1
listening only
node 2
listening only
node 3
recessive
result

CAN Bus Arbitration Method

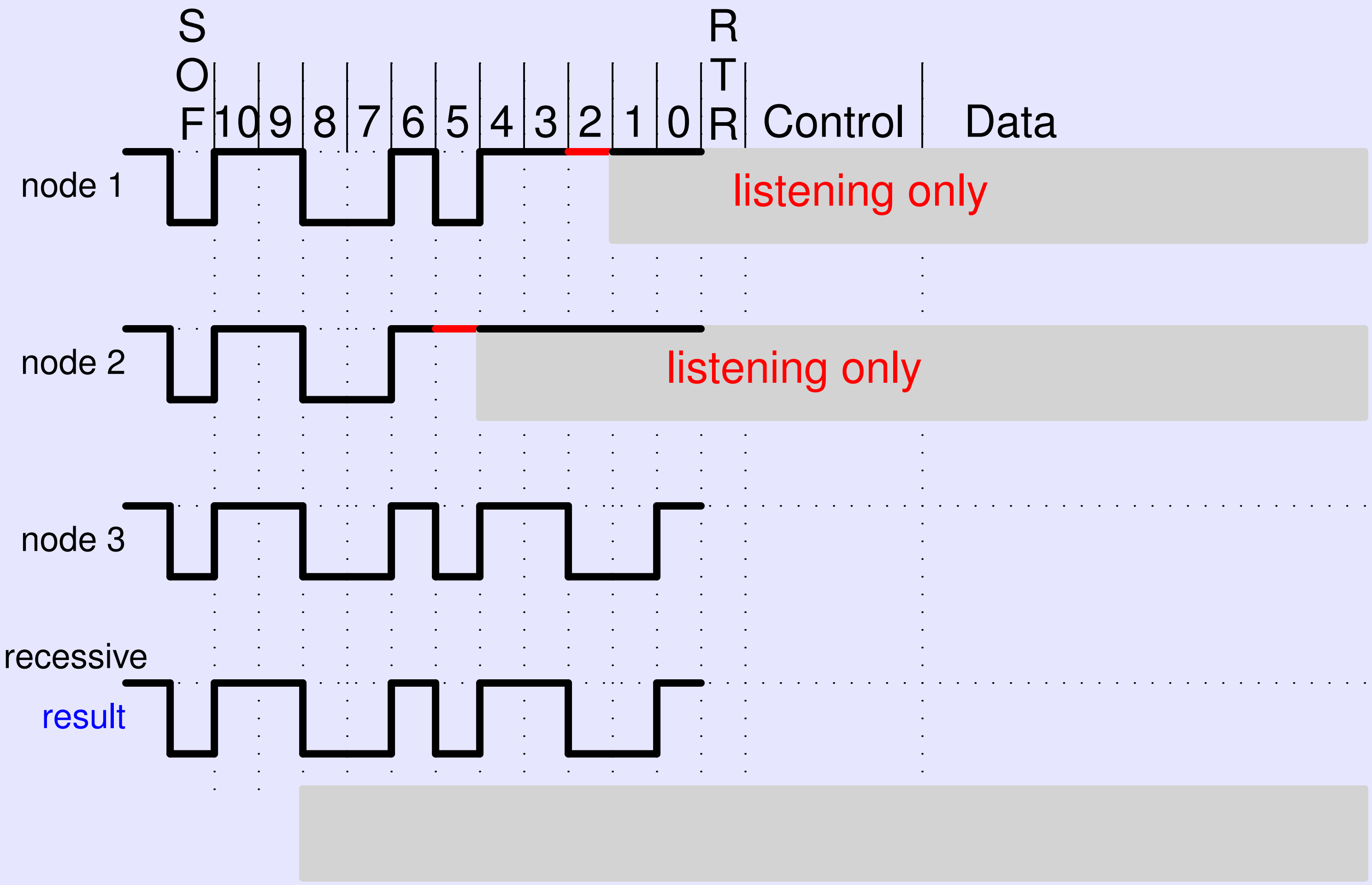
SOF
10
9
8
7
6
5
4
3
2
1
0
RTR
Control
Data
node 1
listening only
node 2
listening only
node 3
recessive
result

CAN Bus Arbitration Method

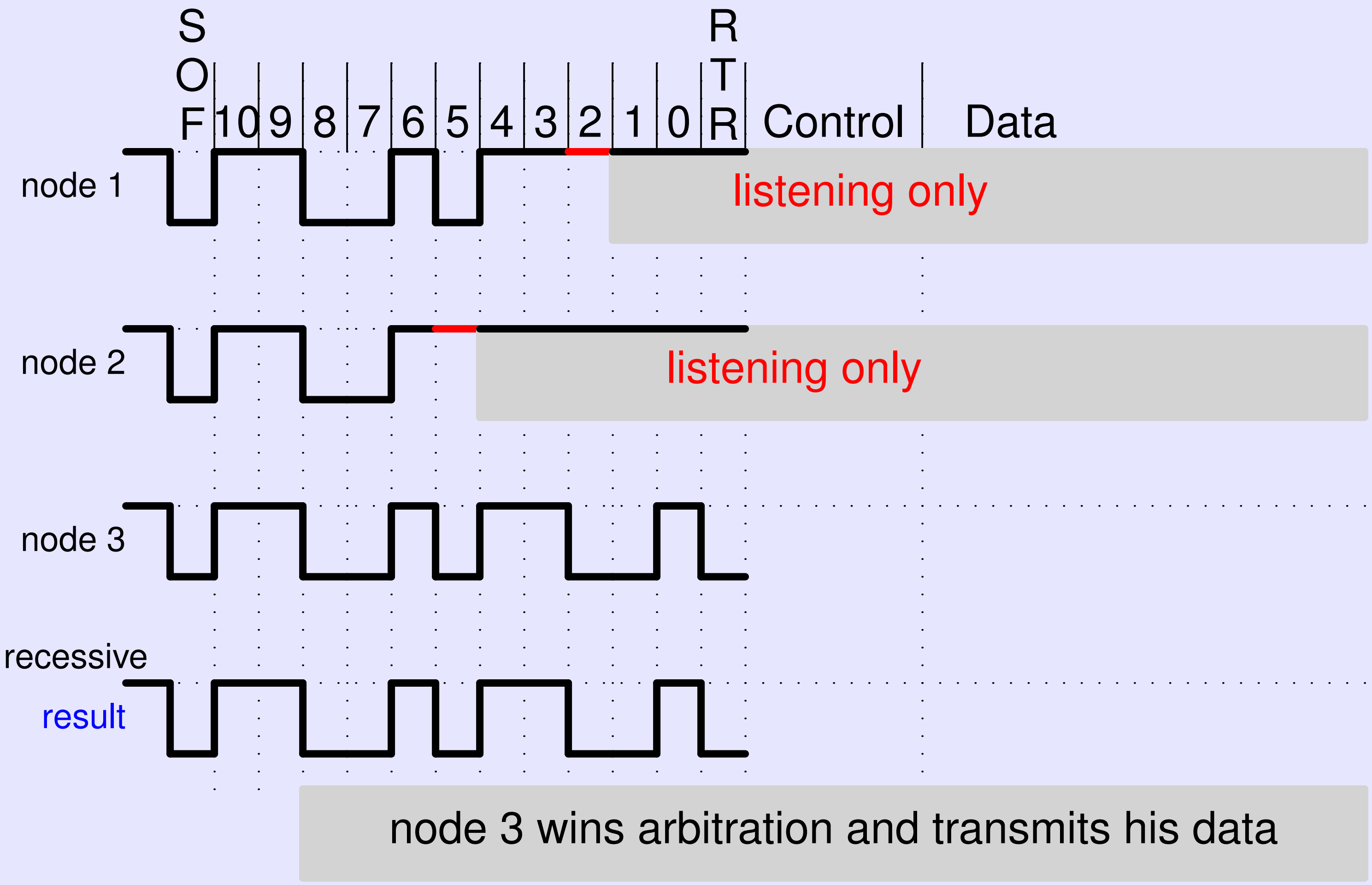
SOF
10
9
8
7
6
5
4
3
2
1
0
RTR
Control
Data
node 1
listening only
node 2
listening only
node 3
recessive
result

node 3 wins arbitration and transmits his data

CAN Bus Arbitration Method

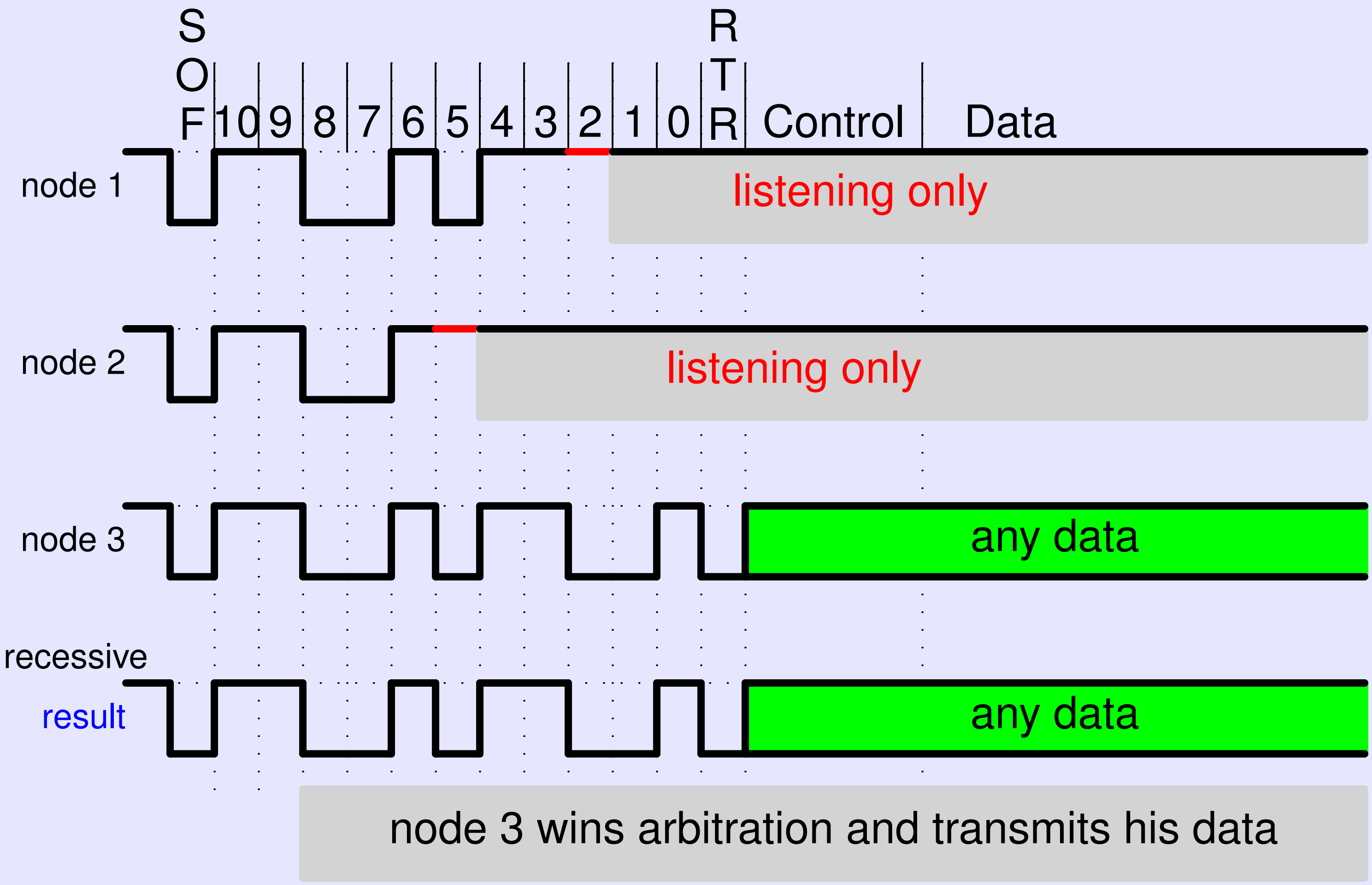
SOF
10
9
8
7
6
5
4
3
2
1
0
RTR
Control
Data
node 1
listening only
node 2
listening only
node 3
any data
recessive
result
any data

node 3 wins arbitration and transmits his data

After loosing the arbitration, a node switches to "listen only" mode

© 2004 port GmbH

CAN Data Link Layer