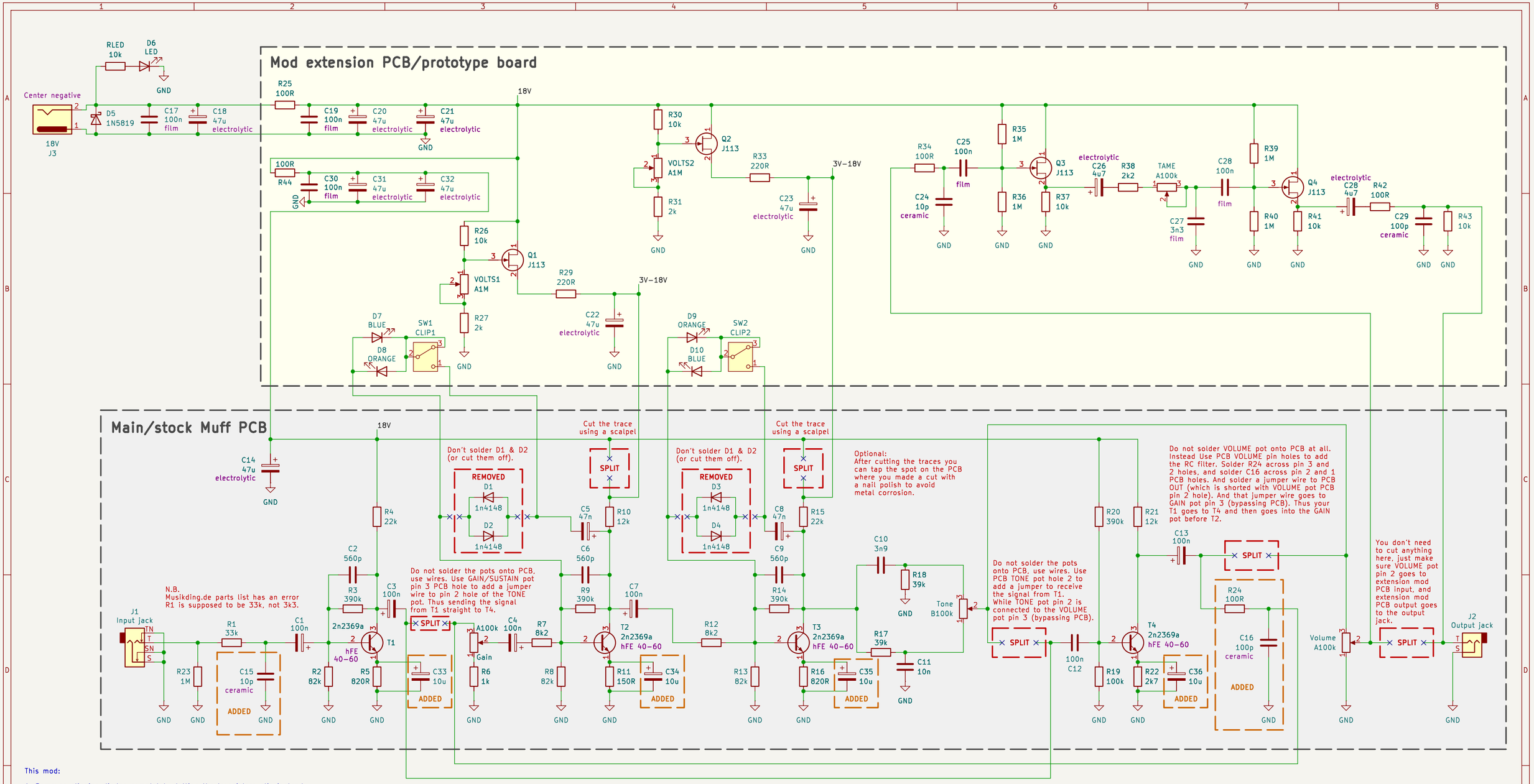

This mod:

1. Removes clipping diodes completely, letting the transistors clip instead, making classic Muff circuit loud and wild, like a real fuzz pedal.
2. Re-routes T4 gain stage to go after T1, giving the clipping stages more pre-gain as they require much more to really clip, since there are no diodes, only transistors clipping when they can amplify no more. And you don't need the final VOLUME boost at all, since the clipping stages without the clipping diodes go LOUD!
3. VOLUME knob goes right after the TONE knob after the clipping stages, and then the signal goes to the JFET buffer.
4. Adds buffered rat-style tone control (TAME knob, low-pass filter) on top of existing Muff TONE control that allows to tame harshness in the highs with extreme Muff's TONE settings, adding more usable tonal options (e.g. very tight on the low end but not painfully bright/too splattery).
5. Adds 2x VOLTS knobs that is controlling buffered voltage regulator for each clipping stage individually in the middle of the circuit, ranging from very low, when the transistor is closed to around ≈18V (≈max supply voltage), allowing you to have kind of a splattery gated fuzz, which also reduces highs and lows content.
6. Uses 18V power supply, which makes pre-boost gain stages cleaner and more high-headroom gain while the clipping stages can be set to whatever voltage you prefer individually (see VOLTS knobs, ≈3V-≈18V). The pedal will still work just fine with 9V, with reduced VOLTS range (≈9V max).
7. Improves DC filtering and adds extra RF filters, making the circuit less noisy, more stable.
8. Make the pedal output buffered, so your VOLUME knob does not affect output impedance of the pedal, it's always low.

Pots wiring (instead of cutting traces on the PCB):

GAIN/SUSTAIN pot pins 1 and 2 are soldered onto PCB, as designed by the PCB. Pin 3 though is soldered to the PCB TONE pot PCB hole 2 (thus sending the signal from T1 straight to T4).

TONE pot pins 1 and 3 are soldered onto the PCB as designed by the PCB. Pin 2 of the pot though is connected to pin 3 of the VOLUME pot (bypassing the PCB). So that the VOLUME pot is going right after the TONE pot.

None of the VOLUME pot pins are connected to the main PCB. Pin 3 is connected to TONE pot pin 2, pin 1 is soldered to the pot back/case (which is supposed to be grounded by touching the metal of the shielded pedal case). And pin 2 is connected to the extension mod PCB first buffer input (R34).

LEDs forward voltage measurements

RED – 1.93V
GREEN – 2.02V
BLUE – 2.63V
ORANGE – 1.97V
YELLOW – 2.10V
WHITE – 2.73V

In the schematic stock parts for Muff circuit are the TRIANGLE one
but you can use whatever Muff variant you prefer.
Main Muff schematic is based on Musikding.de Muff DIY kit layout.
https://www.musikding.de/Der-Muff-Triangle-Distortion-kit

Sheet: /
File: real-fuzz-muff-mod.kicad_sch

Title: Wenzel's Real Fuzz mod for classic Muff circuit

Size: A3	Date: March 2026	Rev: r2
KiCad E.D.A. 9.0.5		Id: 1/1