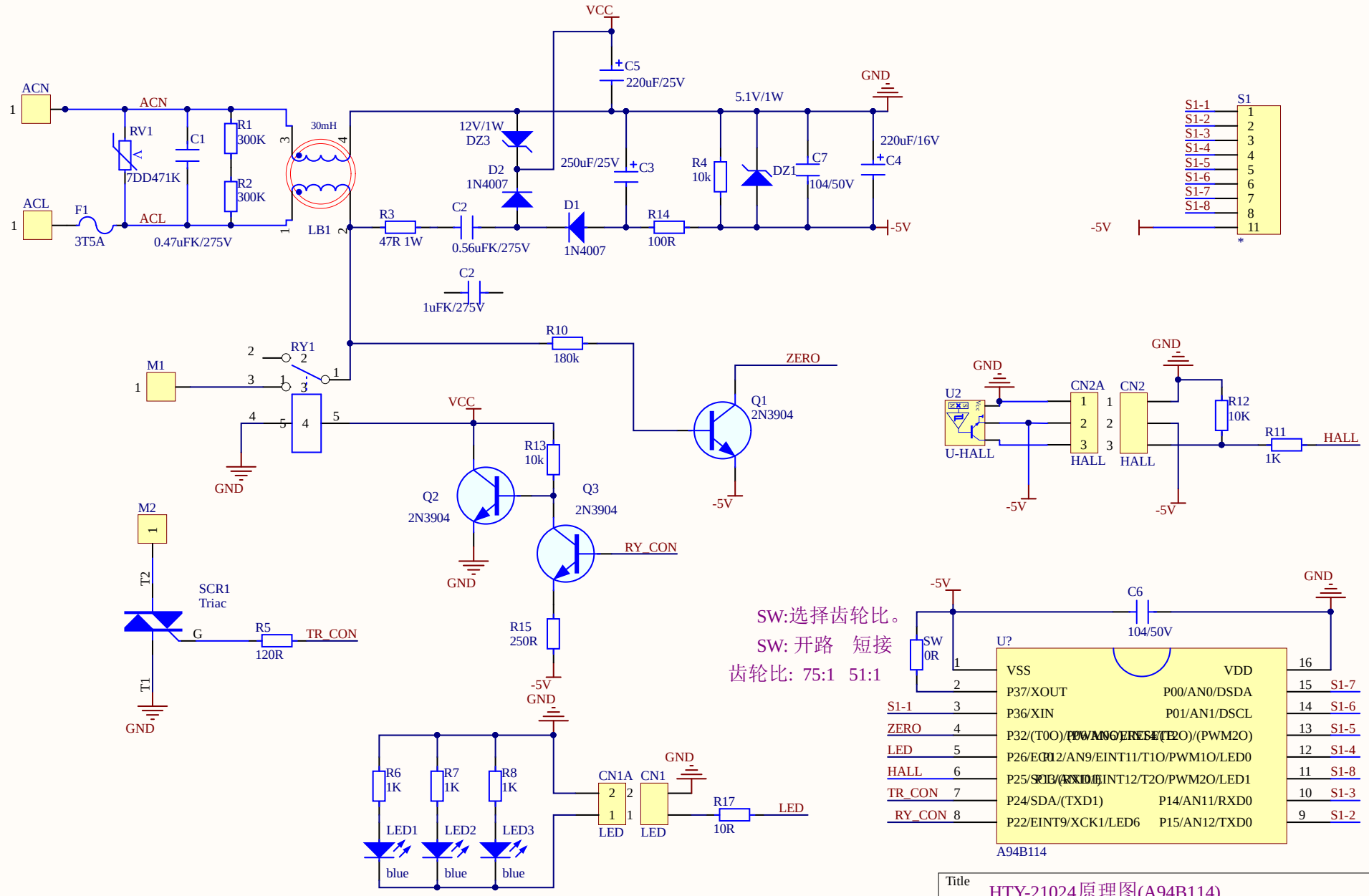

Title	HTY-21024原理图(A94B114)	
Size A3	Number	Revision
Date: 2021/8/12		Sheet of
File: F:\Work\..\HTY-21024 V01 - A94B114.SchDoc		Drawn By: