Riverbed Simulator (Tombola)

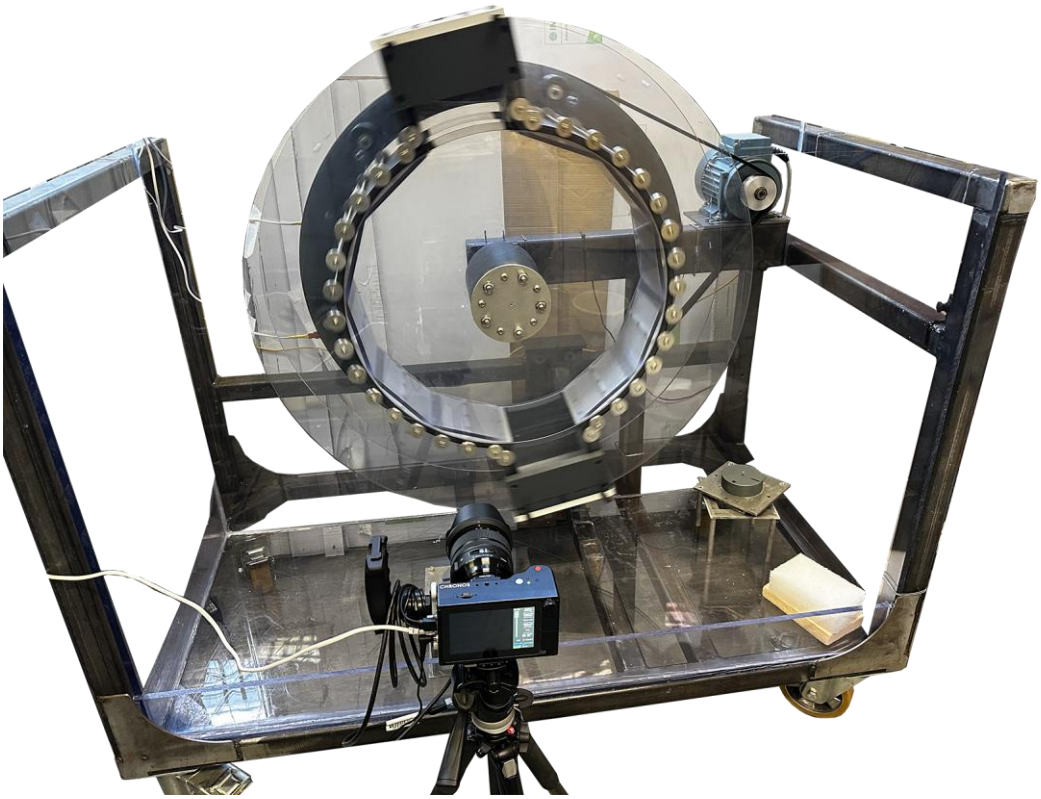

Hardware and Software Functional Requirements

Dr Byron Adams
Dr Gary Twinn
Dr Jesse Zondervan

Contents

Contents 1
List of Figures 2
List of Tables 2
Overview 3
Tombola PC application 5
Example application 7
PC Setup 8
Tombola API Controller (Raspberry Pi) 9
Raspberry Pi 10
Software Application 12
Raspberry Pi System Installation and Configuration 16
Operating system 16
Software installation 16
Run Operating System Updates 16
Install Python Dev and Setup Tools 16
Nginx installation 16
Install git 16
Download the tombola api code 16
Create a python virtual environment 17
Change to the virtual environment 17
Install the required Python libraries 17
Nginx Configuration 17
Gunicorn for Python service 17
Reboot the Raspberry pi 17
References 19

List of Figures

Figure 1: Block Diagram 3
Figure 2: Connection Diagram 9
Figure 3: Schematic of RPM Interface 11
Figure 4: Web status page 14
Figure 5: API messages that are accepted 15

List of Tables

Table 1: Tombola app settings 6
Table 2: MODBUS Registers 12
Table 3: Tombola API Settings stored in the Json file. 13

Overview

The riverbed erosion simulator consists of a large (1m) sealed drum that can be filled with water and glass beads to simulate gravel on the riverbed. Two blocks of concrete are used as a proxy for the underlying bedrock. As the drum rotates the water and glass beads flow across the concrete blocks and erode them. The drum is powered by a 3 phase electric motor. The drum rotates about a hub taken from the rear of a Vauxhall Corsa automobile and contains an anti-lock brake sensor (ABS). The ABS sensor contains 48 magnets located evenly around the inside of the hub and a Hall effect transducer that signals as the magnets pass.

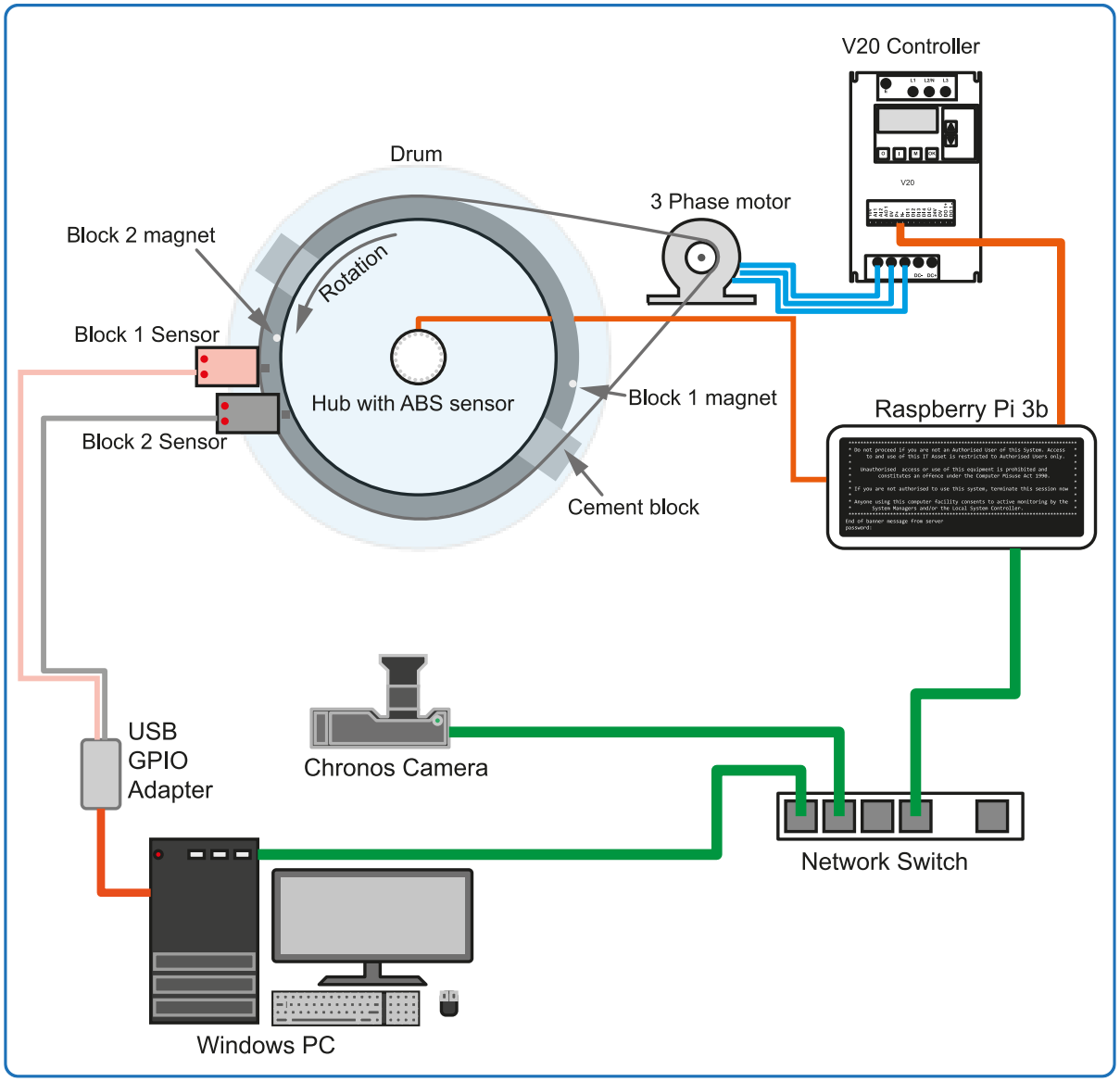

Figure 1: Block Diagram

The motor is controlled by a Siemens V20 single phase to 3 phase invertor linked to a Raspberry Pi 3b single board controller which provides an application programming interface (API). Video clips of the beads striking the blocks are captured on a Chronos High Speed Camera. The camera is controlled via Windows PC running which also has hall effect sensors to detect the position of the drum.

The camera, Raspberry Pi and PC all connect to an ethernet local area network and use an HTTP RESTful API to communicate.

Tombola PC application

The Tombola app is the orchestration application that manages the data gathering and provides an simple interface to the whole apparatus for researchers. It runs on a PC and was written in Python (Python Software Foundation 2023). It can be downloaded from https://github.com/westerlymerlin/UCL-Tombola-app.

The application consists of a Python Class module "`CameraClass`" which manages communication to the Tombola API Controller (which drives the drum) and the Chronos 2.1 High Speed camera via RESTful HTTP commands. It also takes an input from an Adafruit FT232H Breakout - General Purpose USB to GPIO adapter which is linked to two hall effect sensors that take positional information from the drum (Figure 1). The class stores settings in a json (Crockford 2006) file.

The `CameraClass` has 6 public methods:

- **`set_drum_rpm(nn.n)`**

  Sends a command to the Tombola API controller to start the drum spinning at nn.n rpm. The speed can be from 0.0 (stop) to a maximum of 75.9 rpm.

- **`get_drum_rpm()`**

  Requests the current rpm from the Tombola API controller, the controller will return the actual rpm as a floating point number.

- **`start_camera()`**

  Starts the camera recording process. The `CameraClass` will then wait until it receives a signal from the block sensors connected to the USB-GPIO interface and will then start the Chronos 2.1 camera recording. It will record a set number of frames based on the rpm, arc that is required to be recorded and the desired frame rate. There is a setting "`recording_cadence`" which tells the class how many rotations to record before saving to the storage device. A cadence of 10 will cause the class to record 20 clips (2 x blocks for 10 revolutions) revolutions.

- **`stop_camera()`**

  Stops the camera recording cycle.

- **`change_setting(setting, value)`**

  Changes the settings for the application and writes them away to the `settings.json` file.

- **`print_settings_to_console()`**

  Prints out the settings from the `settings.json` file.

Setting	Default Value	Description
logappname	"Tombola-Py"	App name to add into the log file
logfilepath	"./logs/tombola-app.log"	Location of the file
loglevel	"INFO"	Logging level (INFO or DEBUG)
drum_apikey	"<type-it-here>"	The API-Key is the identifier used to authenticate with the Tombola API controller to confirm the commend received is from a valid user.
drum_controller	"http://192.168.0.10/api"	The network address of the Tombola API
drum_controller_timeout	0.5	The timeout in seconds to wait for a response form the API
recording_cadence	10	The number of revolutions to record before saving to the storage device (15 = 15 revolutions x 2 clips = 30 clips)
camera_controller	"http://192.168.0.20/control"	The network adderss of the Chronos Camera
camera_controller_timeout	0.5	The timeout in seconds to wait for a response from the camera
camera_storage	""	The location to save the movies to: SDA1 = SATA Hard Drive MMC1 = MMC SD card
camera_format	"x264"	File Format for saving: 'x264' = mp4 'byr2' = raw video 16 bit depth 'y16' = raw video 16 bit depth 'y12b' = raw video 12 bit (mostly unsupported)
camera_recMode	"segmented"	Recording mode normal burst segmented
camera_degrees	45	The number of degrees required to be recorded from each block trigger
camera_frame_rate	500	Frame rate of the camera
camera_qty	1	Number of cameras installed (2 for a 2 camera setup)

Table 1: Tombola app settings

Example application

```
from time import sleep
from camera_control import CameraClass

# code to execute when the script is run directly
camera = CameraClass()
camera.change_setting('recording_cadence', 10)
camera.show_settings()
camera.set_drum_rpm(30)
sleep(10)
camera.start_camera()
sleep(30)
camera.stop_camera()
sleep(10)
camera.set_drum_rpm(0)
```

PC Setup

1. Setup the PC with windows 10 / 11
2. Plug in the USB to GPIO Adapter
3. Configure the Adafruit USB GPIO adapter with the correct driver
    a. Download the Zadig application from https://zadig.akeo.ie/
    b. Run the downloaded app
    c. Click on the “List all devices” menu option
    d. Select the USB Serial Convertor item form the list with an ID of 0403 6014
    e. Set the driver to “libusbK”
    f. Click “Replace Driver”
4. Install git from https://git-scm.com/download/win
5. Install Python 3.12
6. Install your favourite IDE (I use PyCharm)
7. Clone the repo `git clone https://github.com/westerlymerlin/UCL-Tombola-app`
8. Open the `UCL-Tombola-app` folder in the IDE and configure a virtual environment (venv)
9. Install the required libraries `pip -install -r requirements.txt`
10. Use the `example.py` script as the basis for a new experiment sequence

Tombola API Controller (Raspberry Pi)

The Tombola Controller consists of a Raspberry Pi single board computer (Raspberry PI Foundation 2020) and is linked to a Siemens V20 single phase to three phase invertor (Siemens 2023) which provides controlled power to the motor (Figure 2). The Raspberry Pi Communicates with the Siemens V20 via an RS-485 (TIA 1998) controller. Feedback from the Tombola drum is via an RPM interface that takes the signal from the Hall Effect sensor and passes it to a general-purpose input / output (GPIO) line on the Raspberry Pi to provide details on the rotational speed.

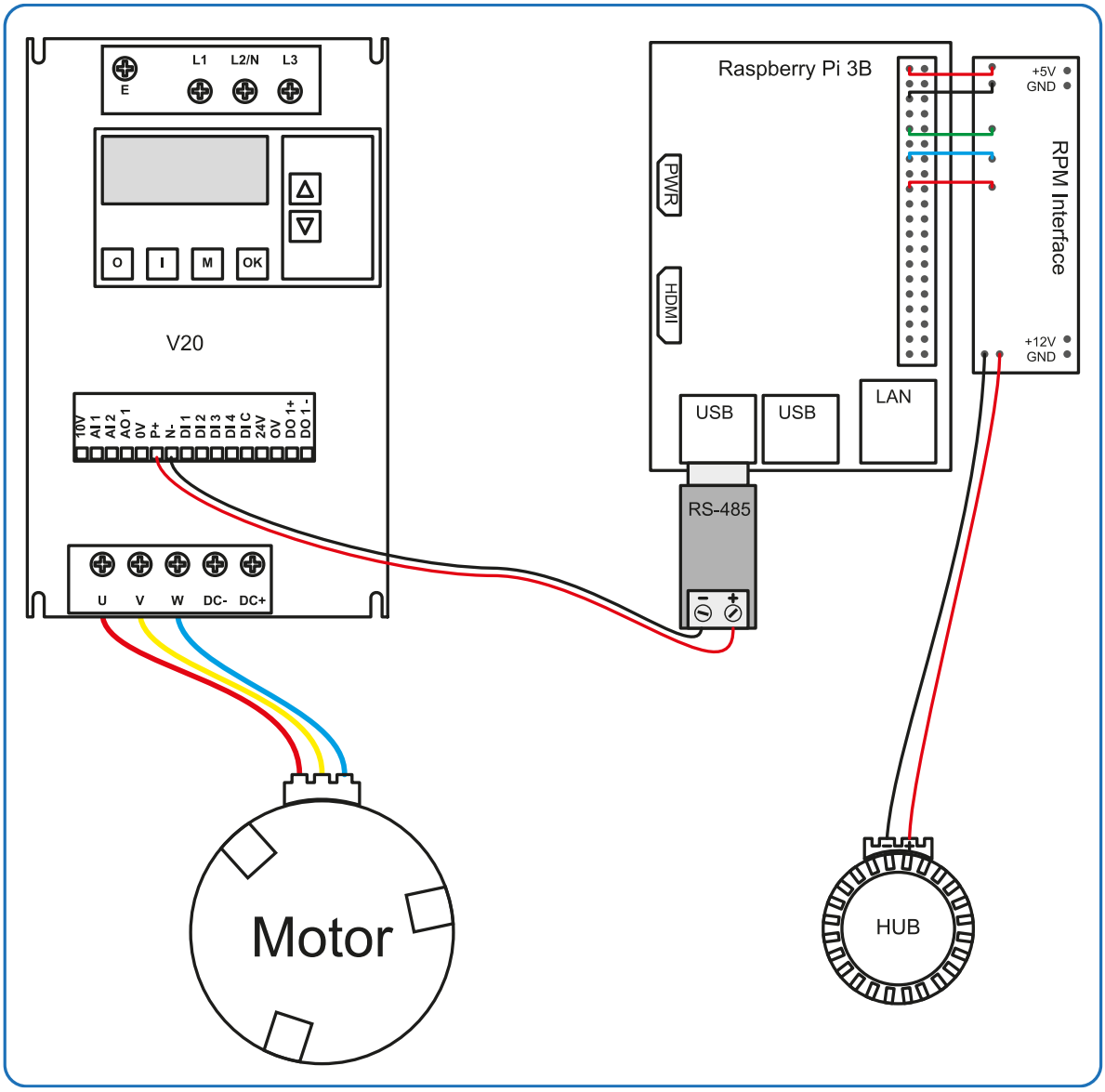

Figure 2: Connection Diagram

Raspberry Pi

Using a low cost single-board computers that support General Purpose Input Output (GPIO) and open-source programming languages is a cost effective approach to control laboratory equipment (Twinn 2023). The computer chosen was a Raspberry Pi model 3B, it is a single board computer that has a 4 core 1Ghz ARM 64bit CPU and 4Gb of RAM. A 32Gb MMC memory card provides persistent storage and serves as the main storage drive. The Raspberry Pi was configured to use the latest headless Debian 64bit operating system (Software in the Public Interest 2020). The minimal Debian OS distribution only includes the basic operating system and networking components require to run a as server, it has no graphical or desktop components that would consume processor and memory capacity. The Raspberry Pi has Python 3.11 installed (Python Software Foundation 2023) as the application to control the Tombola was written in Python.

The Raspberry Pi connects to the Siemens V20 via a RS-485 interface plugged into a USB port and access as a serval device at the address `/dev/ttyUSB0`. RS-485 is a two wore balances pair serial interface that supports a number of data rates (TIA 1998). The Siemens V20 has a default baud rate of 9600 which is adequate for this application and provides resilience to electrical interference. The Siemens V20 used the MODBUS command protocol (Modbus Organisation 2012) which consists of specifying and setting registers to set values for the motor such as rotational speed or direction and reading registers such as frequency and voltage.

Rotational feedback from the Tombola hub is provided by a hall effect sensor built into the hub (originally the ABS sensor) which connects to the Raspberry Pi GPIO via a custom built interface (Figure 3). The RPM is calculated by measuring the time for the Hall Effect sensor to detect 48 pulses. The Hall Effect sensor takes uses a 12 V power supply and provides an output voltage of 5.7 V when the sensor is not near a magnet and 8.0 V when the sensor is activated by a magnet. The interface takes the signal from the Hall Effect sensor and passes it to an NPN bipolar transistor with a high forward gain (Figure 3 TX1), this causes the transistor to switch on if the signal is above 6.5 V, and off if it below. As the output of the transistor is either 12 V or 0 V and the GPIO is expecting a signal of 3.3 V or 0 V an opto-isolator (Figure 3 U1) is used, this consists of an integrated package that contains an LED and phototransistor, when current flows through pins 1 and 2, the LED will light and the transistor will switch on. Using an opto-isolator provides protection for the Raspberry Pi by isolating it from the 12 V circuit, even in the event of a component failure. The Raspberry Pi has GPIO channel 27 configured as an input with a rising edge detection, this generates an interrupt to the ARM processor as the input voltage on the GPIO moves from 0 V to 3.3 V. The circuit board also has a 5 V connection for the Raspberry Pi touch screen and an additional LED that lights when GPIO 17 is set to output and on, this is used to signal the Raspberry Pi is ready to receive RPM data.

Safety information is also fed back via a webcam attached to a USB port.

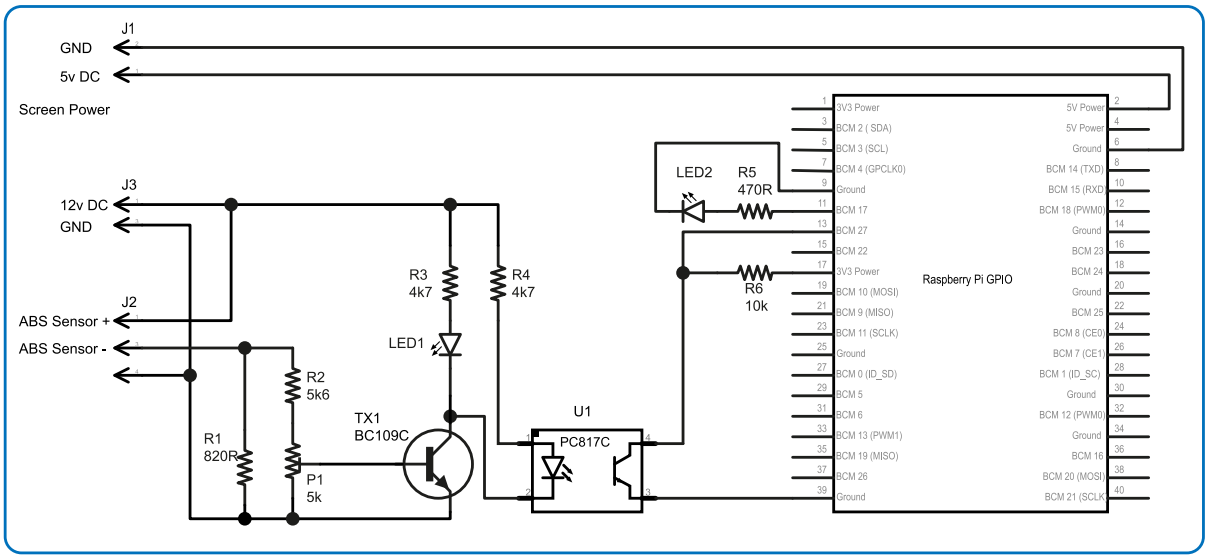

Figure 3: Schematic of RPM Interface.
5v power from the Raspberry Pi provides power to the LCD touch screen. LED1 lights when a magnet passes the abs sensor. LED2 is lit by the application when it has completed initialisation

Software Application

The application is written in Python 3 and consists of four main modules:

1. A motor control module that connects to the Siemens V20 and command and query functions so send commands to the V20 and read data back
2. An RPM module that responds to the interrupt signals from the RPM Interface and calculates the Tombola RPM
3. A web application to provide a user interface
4. A camera module to stream live video from the web cam
5. A settings function to store the settings used by the modules above.

The application can be downloaded from https://github.com/westerlymerlin/UCL-tombola-API

The module that communicates with the V20 controller is the python class (MotorClass). The MotorClass utilises the MinimalModbus library for Python 3 (Berg 2023) to handle the MODBUS messages and uses a standard Linux address (/dev/ttyUSB0) for the RS485 adapter. Using MinimalModbus library, the motor class configures the port and then only needs to specify a start register and then send data to set the values or send a read command to read them back.

The MODBUS registers used to set the desired values for speed, direction and to enable the V20 are registers 40003 – 40006. The values returned from the V20 are in registers 40024 through 40034 (Table 2).

Register	Description	Access
40003	Frequency setpoint	Write
40004	Run enable	Write
40005	Forward/reverse command	Write
40006	Start command	Write
40024	Frequency output	Read
40025	Speed	Read
40026	Current filtered	Read
40033	Voltage output	Read
40034	Forward/reverse	Read

Table 2: MODBUS Registers

The MotorClass has a function that can analyse commands that come in via the web app and then either send a command to the V20 or query registers.

The RPMClass contains an array of values for 3 x the number of magnets on the hub and each time there is an interrupt on GPIO 27, a function appends the time the interrupt was received to the array. Once there have been 3 revolutions of the tombola the time for the first reading is subtracted from the last reading to give the time for 3 revolutions. By using the time for 3 revolutions and averaging them, any small inconsistencies caused by moving weight (water and ball bearings). If the gap between two readings (1/48th of a turn) is over a set time (default is 2 seconds) it is assumed the tombola has stopped and an RPM value of zero is returned.

There is a settings function that allows specific settings to be changed, these are saved in the file “settings.json”. Using settings file allows the application to be customised for different applications or testing on different computers.

Setting	Values	Description
autoshutdown	true, false	Enable or disable the auto switch off at a set time
shutdowntime	hh:mm:ss	The time to shut down
port	com 1- 9 /dev/ttyUSB0 - 9	The address of the RS485 controller
baud	300 – 115200	The RS485 port speed
stopbits	0, 1, 2	The number of stop bits in an RS-485 message
bytesize	8	The sise of a data byte on the RS-485 message
station	1 - 1024	The station address for the Computer on RS-485
control_offset	40001 – 49999	The start register for writing data to the V20
reading_offset	40001 – 49999	The start register for reading data from the V20
read_length	1 – 1024	The number of registers to read (from the read_offset)
clear_buffers_after_call	true, false	Clear the data buffer on teh RS-485 controller after reading data
clear_buffers_before_call	true, false	Clear the data buffer on teh RS-485 controller before reading data
timeout	0 – 60	The number of seconts to wait after calling the V20 before abandining the message and rasining timeout error
rpm_sensor_GPIO	1 – 28	The GPIO chanel used to read the ABS sensor
rpm_magnets	1 - 1024	The number of magnets to be read for a single revolution
rpm_timeout_seconds	1 - 60	The number of seconds between tow pulses to wait and assume the tombola has stopped
rpm_active_LED	1 – 28	The GPIO chanel to set to ON in order to light the Ready LED

Table 3: Tombola API Settings stored in the Json file.

The main user interface is a web application designed around the Flask web application framework (The Pallets Project 2020). Flask is a Python framework that allows for rapid development and testing of Web applications without the programmer having to code the services that manage web connections. The flask application connects to a backend Python class to provide the individual functionality for the application. Although Flask framework contains a built-in web server, it is only suitable for use during application development as it is not robust enough for hosting a production service (Relan 2019). To provide a robust and secure service a Gunicorn webserver (Chesneau 2020) and Nginx reverse proxy (Sysoev 2020) are implemented. Gunicorn allows for a better security model than Flask, while Nginx handles the network connections and ensures only valid HTTP requests are routed to the Python application.

The main web application module (app.py) has the HTTP paths that are accessed to provide different pages, an endpoint for the status (read via JavaScript) and an Application Programming Interface (API) that accepts commands as Json messages (Peng *et al.* 2011) to allow for other applications to interact with it.

Access to the controller is via a web page which shows the status of the invertor and allows a user to set the rotational speed of the motor and stop the motor (Figure 4). The main web page uses JavaScript to update a number of values every second to give a near real-time view of the configuration and status of the V20 controller and tombola speed. The page shows the requested values that have been sent to the v20 controller as well as the received values back. The frequency is the value that sets the motor speed. The V20 expects the frequency to be set in units of 1/100 of a percent (0-10,000) but the query responds back with the frequency in Hz. The values for voltage, current that the V20 is supplying and an estimated motor rpm are also returned and displayed on

the web interface. If the Tombola is to be left unattended an auto-stop function is available to switch off the motor at a set time.

To simplify the user settings the desired RPM is entered and the software converts that to frequency at a rate of 11.91 Hz per 0.1 RPM. While running MotorClass monitors the drum rotational speed and will adjust the speed if it deviates ± 0.1 RPM.

User control is via four buttons:

1. The page has a “Start Tombola” button that requires the rpm to be entered. It will then send a set_speed(rpm) command to the V20.
2. The “Stop Tombola” button will stop the Tombola Motor.
3. The “Update Stop Time” button will allow you to change the stop time, the check box sets if the autostop is enabled.
4. The “Reset V20” button is used to reset the “control word” after a power failure.

The webserver also has a link to a USB webcam that streams to the status page to allow remote monitoring of the drum.

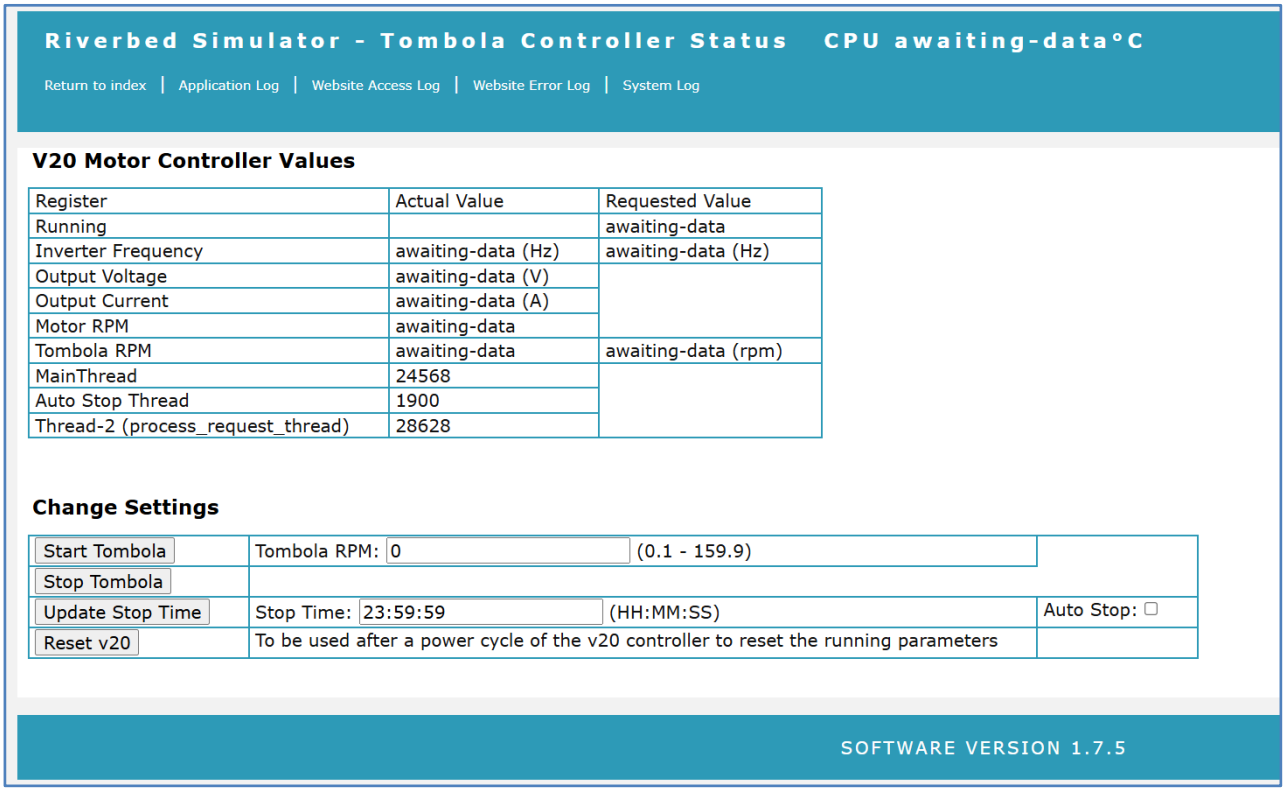

Figure 4: Web status page

There are also a basic set of web pages generated by Flask to show the application log files, system log and webserver error logs for troubleshooting issues.

There is also an application programming interface (API) which gives additional access to the V20 as well as returning data from the RPM module. The API is not available from a normal web browser but can be accessed via standard API testing tools such as Postman or Insomnia (Postman 2020; Kong Inc 2023). To use an API the users needs to connect to the `/api` endpoint and [POST] a Json message in the request.

Json message	Description
`{"setrpm": n.n}`	Start the tombola running and hold it at n.n rpm (0.1 - 74.9 rpm)
`{"setrpm": 0}`	Stop the motor
`{"rpm": true}`	Read the tombola RPM
`{"rpm_data": true}`	Read the tombola timing data from 3 revolutions
`{"write_register": rr, "word": ww}`	Write the word ww to the register rr
`{"read_register": rr}`	Read the value from the register rr
`{"stoptime": "HH:MM:SS", "autostop": true}`	Set the controller to auto shut off at HH:MM:SS
`{"stoptime": "HH:MM:SS", "autostop": false}`	Disable auto stop

Figure 5: API messages that are accepted

Raspberry Pi System Installation and Configuration

Operating system

Use BalenaEtcher to install the latest version of the **Raspberry Pi OS Lite (64 bit bookworm)** operating system onto a 32Gb MicroMMC card.

The latest version of the Raspberry Pi OS can be found here:
https://www.raspberrypi.com/software/operating-systems/

Connect via a USB keyboard and monitor and boot up the Raspberry Pi

Set the new username to `tompi`
Set a secure password `**********`

Run the `sudo raspi-config` command to:

- enable ssh
- disable Serial
- disable 1^2C bus

Software installation

Run Operating System Updates

Run `sudo apt update`
Run `sudo apt full-upgrade`

Install Python Dev and Setup Tools

Run `sudo apt install python3-dev python3-setuptools`

Nginx installation

Run `sudo apt install nginx`

Install git

Run `sudo apt install git`

Download the tombola api code

Create a GitHub folder
Run `mkdir github`
Run `cd github`

Clone the repo
Run `git clone https://github.com/westerlymerlin/UCL-tombola-API.git`

Copy the files to the home folder
Run `cp -r ~/github/UCL-tombola-API/*  ~/`

Set the execute flag on the scripts
Run `chmod 755 ~/bin/*`

Copy the Raspberry pi config files to the etc folder
Run `sudo cp -r  ~/raspberry-pi/etc/* /etc`

Reboot the Raspberry pi
Run `sudo reboot`

After the reboot a warning banner will appear at ssh logon.

Create a python virtual environment

Run `python3 -m venv .venv`

Change to the virtual environment

Run `source activate`

Install the required Python libraries

Run `pip install -r requirements.txt`

Nginx Configuration

Run `cd /etc/nginx/sites-enabled/`
Run `sudo rm default`
Run `sudo ln -s /etc/nginx/sites-available/tombola`

Gunicorn for Python service

Run `sudo systemctl enable gunicorn`
Run `sudo systemctl start gunicorn`

Reboot the Raspberry pi

Run `sudo reboot`

If flask is installed, the python files are in the `/home/pi` directory, gunicorn3 is installed and configured and nginx is installed and configured the web service should be running and the site will be accessible on http://*ip address of the server*

References

Berg, J. (2023) *MinimalModbus library for Python* The MinimalModbus Developers. Available online: https://pypi.org/project/minimalmodbus/ [Accessed.

Chesneau, B. (2020) *Gunocorn, Python WSGI HTTP Server for UNIX*. Available online: https://gunicorn.org/ [Accessed 2020].

Crockford, D. (2006) JSON—The fat-free alternative to XML, *XML 2006.* Boston.

Kong Inc (2023) *Kong Insomnia* Kong Inc. Available online: https://insomnia.rest/ [Accessed.

Modbus Organisation (2012) *MODBUS APPLICATION PROTOCOL SPECIFICATION V1.1b3*, 2012. Available online: https://modbus.org/docs/Modbus_Application_Protocol_V1_1b3.pdf.

Peng, D., Cao, L. & Xu, W. (2011) Using JSON for data exchanging in web service applications. *Journal of Computational Information Systems*, 7(16), 5883-5890.

Postman (2020) *Postman - an API platform for building and using APIs* Postman, Inc. Available online: https://www.postman.com/ [Accessed 2020].

Python Software Foundation (2023) *Python 3 Programming Language*. Online. Available online: https://www.python.org [Accessed March 2023].

Raspberry PI Foundation (2020) *Raspberry PI Model 4B Reference*. Available online: https://www.raspberrypi.org/products/raspberry-pi-4-model-b/ [Accessed July 2020].

Relan, K. (2019) Deploying Flask Applications, *Building REST APIs with Flask: Create Python Web Services with MySQL*. Berkeley, CA: Apress, 159-182.

Siemens (2023) *SINAMICS V20 - The compact basic performance converter*, 2023. Available online: https://www.siemens.com/global/en/products/drives/sinamics/low-voltage-converters/standard-performance-frequency-converter/sinamics-v20.html.

Software in the Public Interest (2020) *Debian Operating System*, 2020. Available online: https://www.debian.org/.

Sysoev, I. (2020) *NGNIX open source web server*. Available online: https://www.nginx.com/ [Accessed 2020].

The Pallets Project (2020) *Flask is a lightweight WSGI web application framework*. Available online: https://palletsprojects.com/ [Accessed 2020].

TIA (1998) *1998: Electrical characteristics of generators and receivers for use in balanced digital multipoint systems.*Telecommunications Industry Association.

Twinn, G. (2023) Combining low-cost single board computers with open-source software to control noble gas extraction lines. *MethodsX*, 10, 101974, DOI: https://doi.org/10.1016/j.mex.2022.101974.