BASIC TRAINING

B1: Robot Dog

Confidential

www.WestonRobot.com

Weston Robot

AGENDA

01
Main Components

02
Basic Operations

03
Internal Architecture

04
Development

Weston Robot

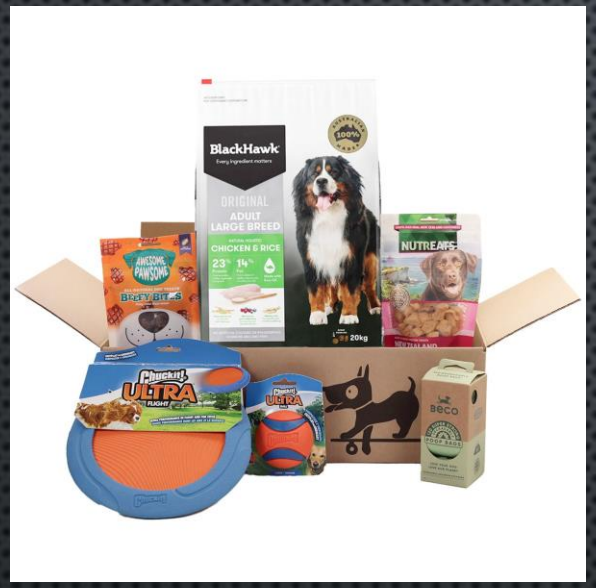

MAIN COMPONENTS

What's in the box?

Weston Robot

MAIN COMPONENTS

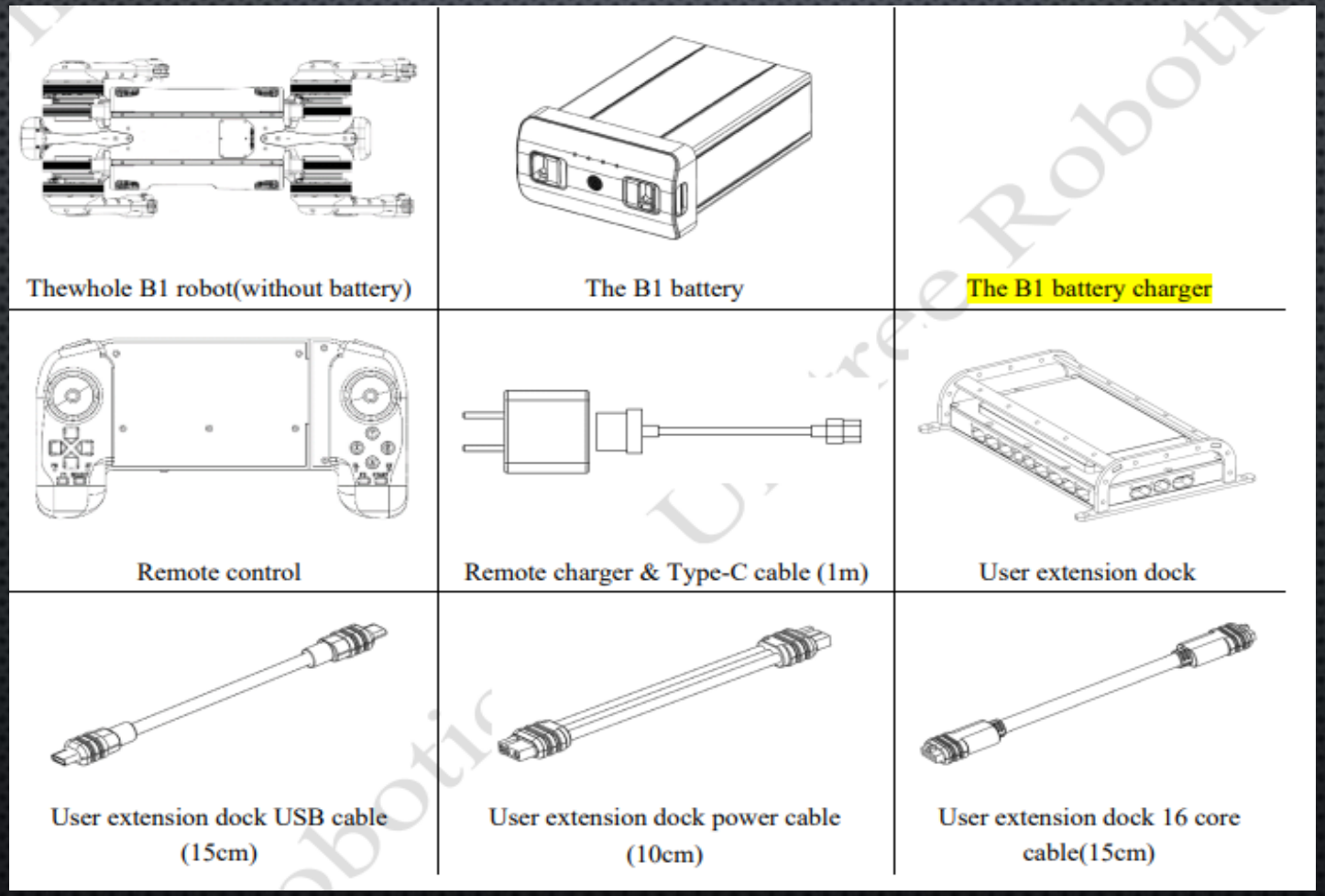

Weston Robot

BASIC OPERATIONS

How it moves?

Weston Robot

B1 - Switching On

1. Battery Check
    1. Check that battery level is > 1 LED
    2. Ensure battery has not been charged recently (Overheat Potential).
2. Insert battery into B1 body
3. Position Check
    1. Ensure B1 is in the neutral prone position (Both knees and feet on ground).
4. Switch on the battery output
    1. One *short press* followed by One *long press*.
5. B1 will stand up after initialising
6. Switch on the remote controller
    1. One *short press* followed by One *long press*.
    2. Check if signal is present and strong.
    3. Ensure controller has sufficient battery.

Weston Robot

B1 – CONTROL MODES

Mode 1

Static Standing Mode

For body attitude control

B1 will not move in this mode

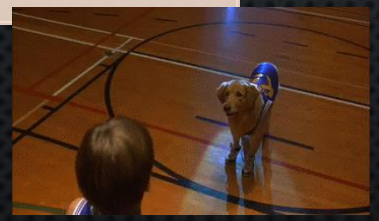

Mode 2

Walking Mode

For B1 movement control

Body attitude adjustment will not work

Mode 3

Obstacle-crossing Mode

For crossing terrain and ramps

Slower movement speed than in mode 2

Weston Robot

B1 – CONTROL STATES

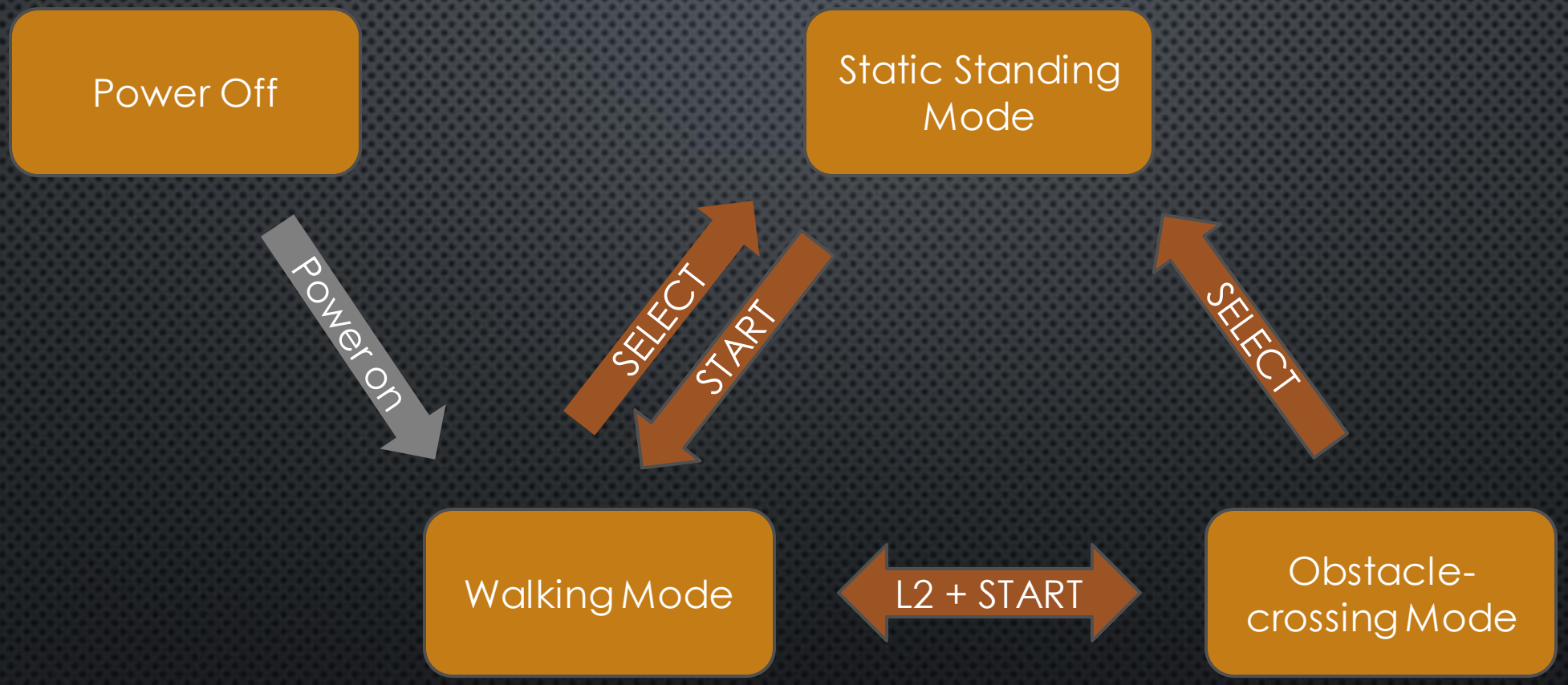

Weston Robot

B1 – Basic Operation Resources

- Summary Guide Page
  - https://docs.westonrobot.net/robot_user_guide/unitree/b1.html
- Instructional Video
  - https://youtu.be/nP6fa-LCz6g

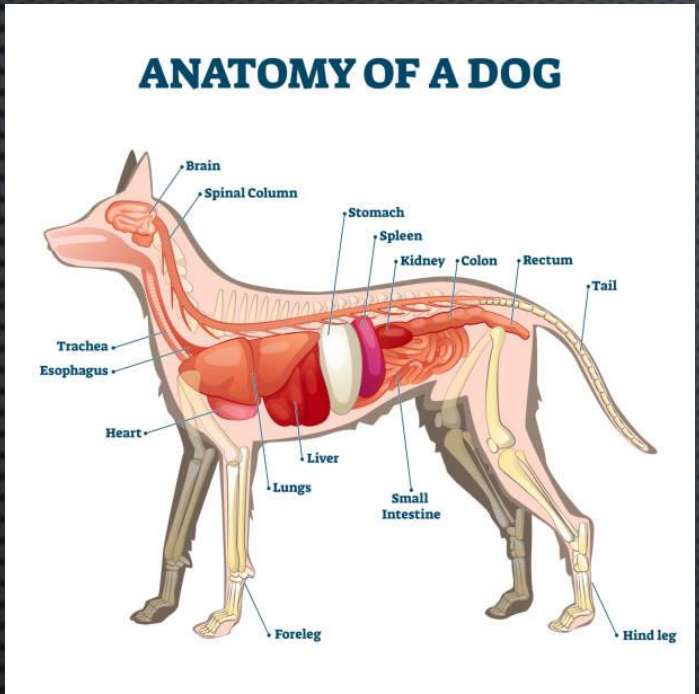

INTERNAL ARCHITECTURE

What makes the B1 tick?

Weston Robot

B1 – INTERNAL SYSTEM OVERVIEW

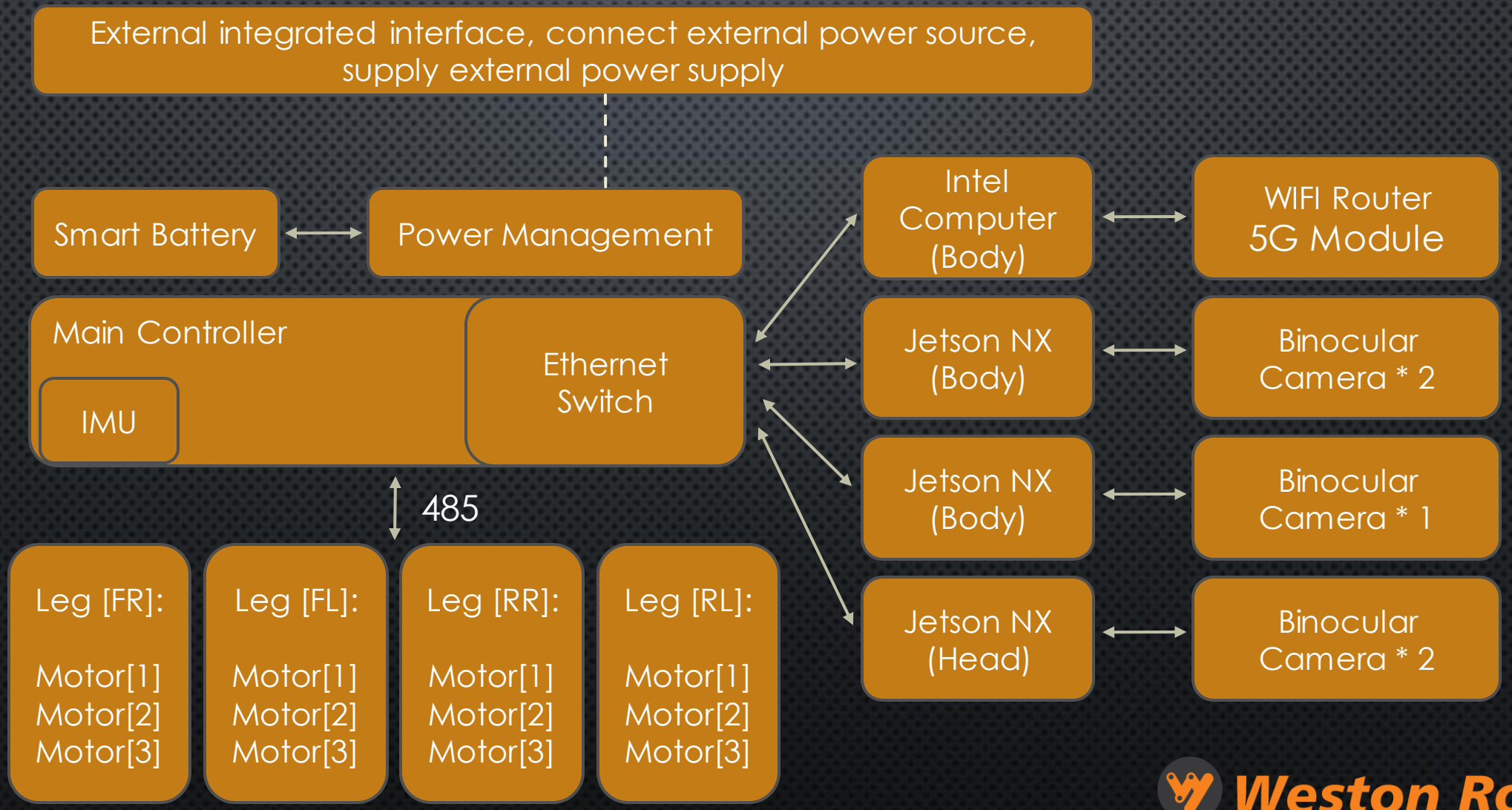

Weston Robot

B1 – NETWORK OVERVIEW

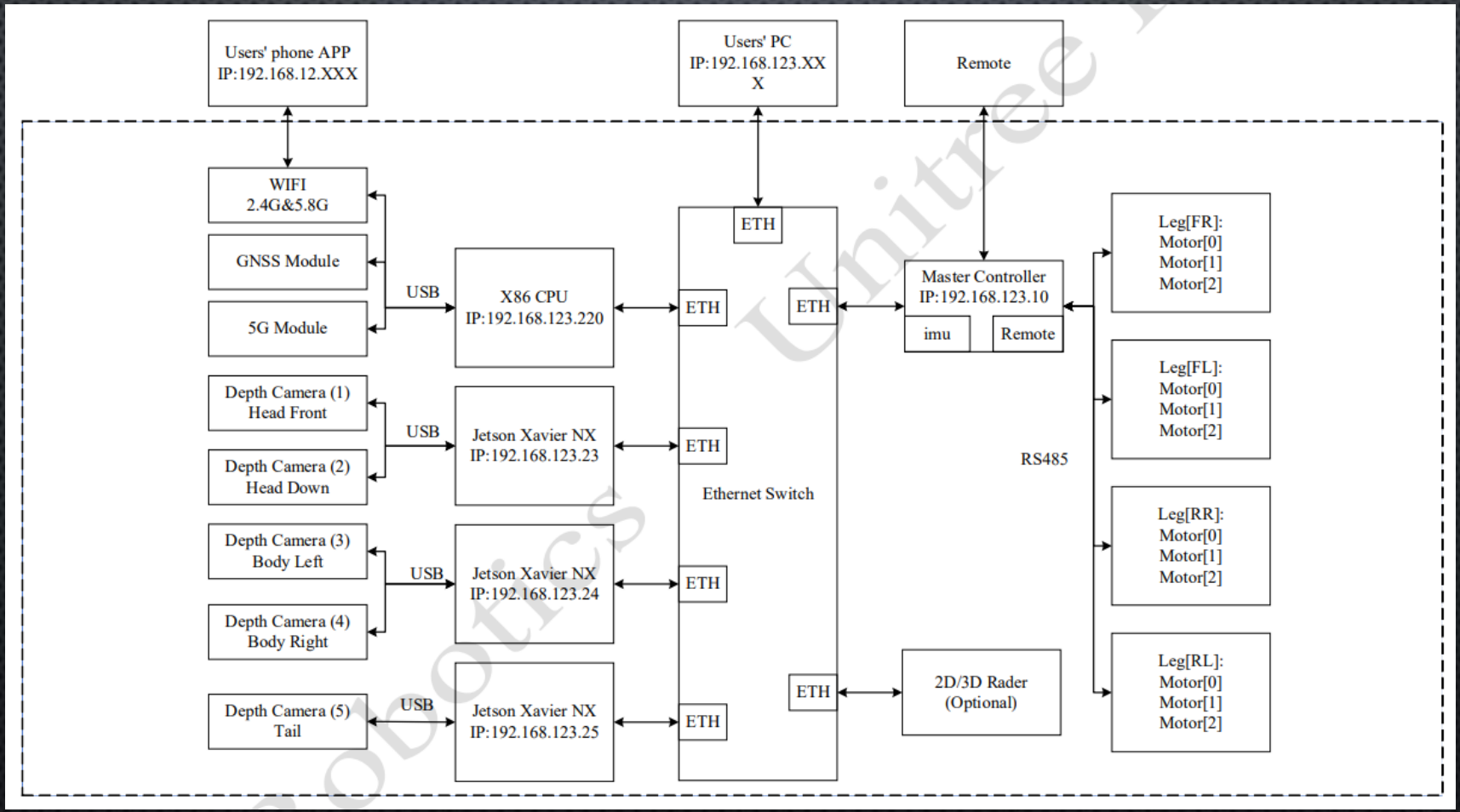

Weston Robot

B1 – USER HARDWARE INTERFACES

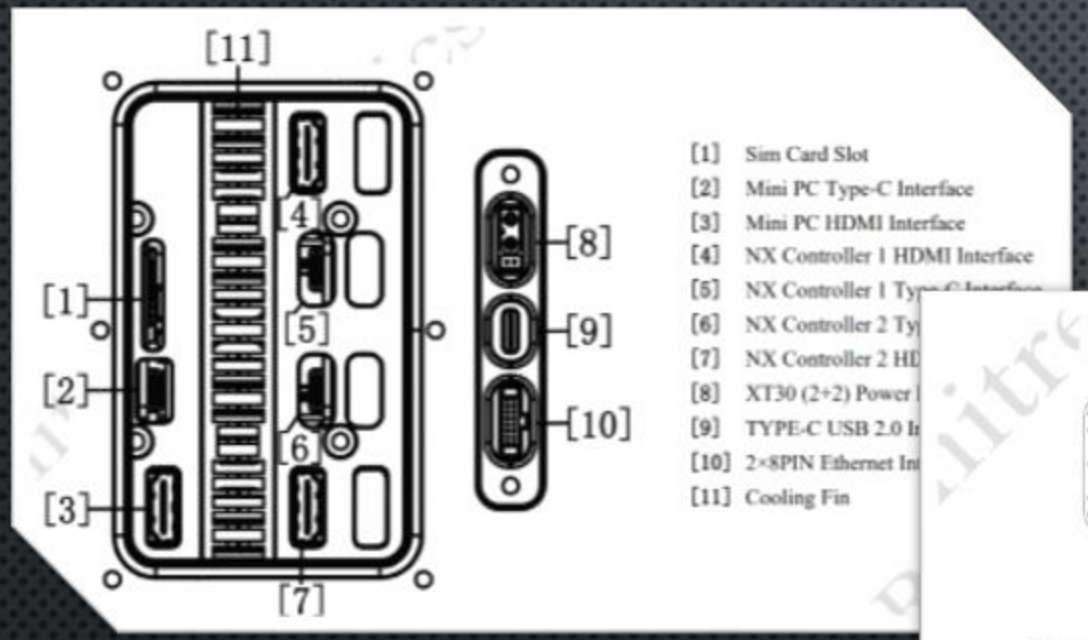

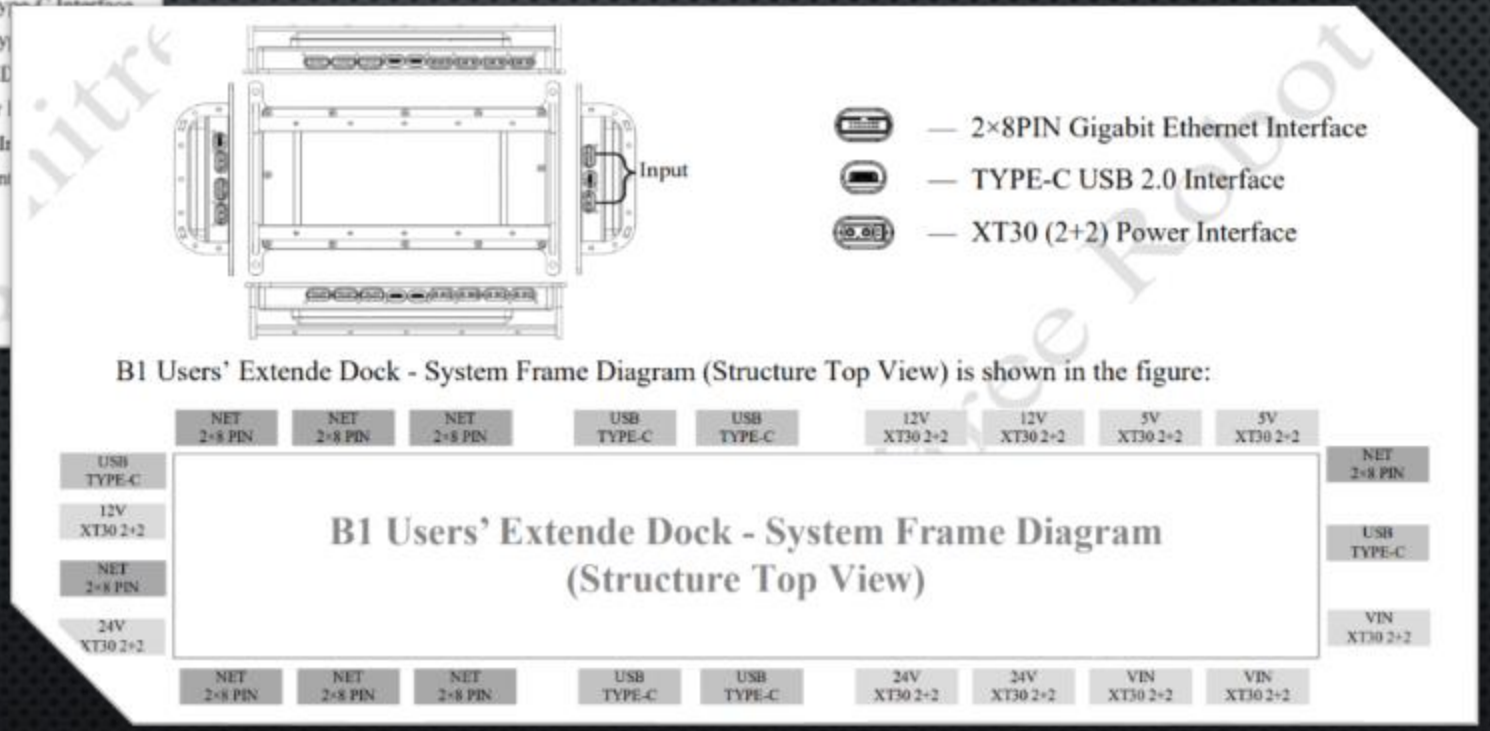

Weston Robot

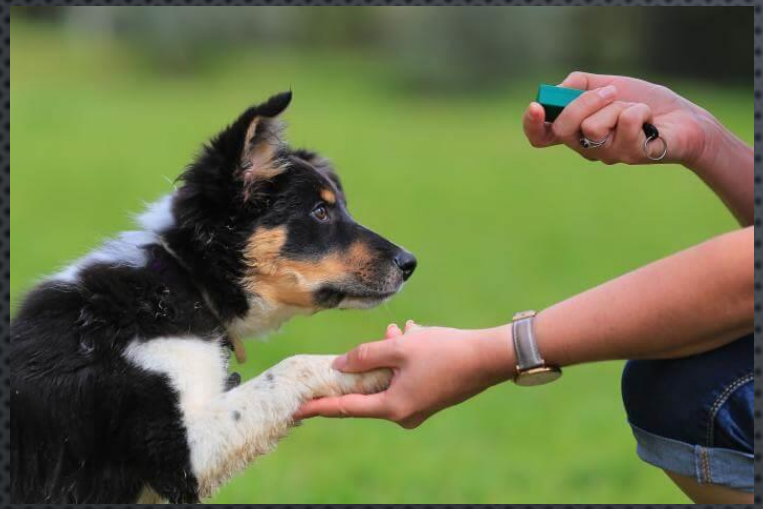

DEVELOPMENT

Teach a dog a few new tricks?

Weston Robot

B1 – Accessing Internal Computers

- Access using
  - HDMI & USB
  - SSH
    - WIFI
      - SSID: UNITREE_B1-XXX(-2.4G)
      - Password: 00000000
      - Subnet: 192.168.12.X/24
    - Ethernet
      - Subnet: 192.168.123.X/24
      - No DHCP server

Not Bridged!!!

- Login Credentials
  - Username: unitree
  - Password: 123

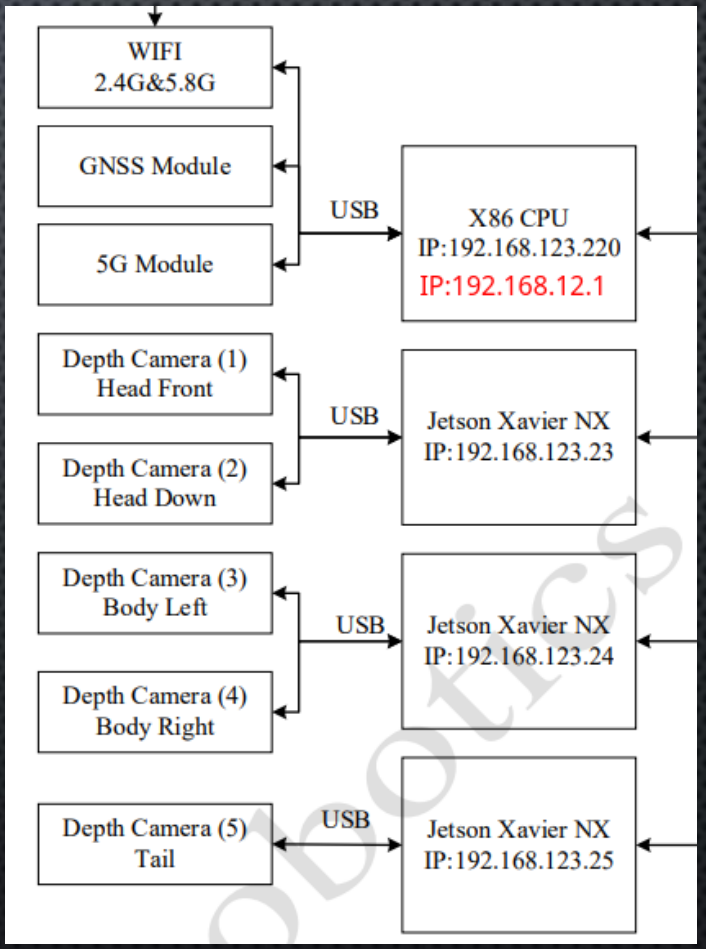

Weston Robot

B1 – UNITREE_LEGGED_SDK

- The SDK provides both high-level & low-level control schemes of the B1's control interfaces.
- The high-level control scheme controls the B1 as a unit
  - Give instructions in relation to body attitude, movement speed/direction.
  - Receive feedback in relation to odometry, gait type
- The low-level control scheme controls each individual motor
  - Give instructions in relation to motors' velocity, torque, angle
  - Receive feedback in relation to motors' states

https://github.com/unitreerobotics/unitree_legged_sdk - GitHub

V3.8.3 - Latest supported version

Weston Robot

B1 – USING SDK FROM EXTERNAL PC

- Connect a host ubuntu pc to the B1's network (WIFI or Ethernet)
  - Ensure you can communication with the main x86 computer
- Get pre-requisites in the host computer
  - Boost (version >= 1.71.0)
  - Cmake (version >= 3.16.3)
  - G++(version >= 9.4.0)
  - Lightweight Communications and Marshalling (LCM) https://github.com/lcm-proj/lcm
- Get unitree_legged_sdk
  - In the sdk directory, run the following commands to compile examples
    - mkdir build
    - cd build
    - cmake ..
    - Make
- Run the examples
  - sudo ./example_walk

B1 – USING SDK FROM INTERNAL COMPUTER

- *While using the internal onboard computer for SDK usage is possible, it is not an intended nor recommended usecase.*
- Gain access to the main x86 computer (WIFI or Ethernet)
  - Ensure you can communication with the main x86 computer
- Get unitree_legged_sdk
  - In the SDK directory, run the following commands to compile examples
    - mkdir build
    - cd build
    - cmake ..
    - Make
- Run the examples
  - sudo ./example_walk

QUESTIONS?

To be or not to be?