DCT32B5805F05T20

Bluetooth Low Energy (BLE)/Proprietary 2.4GHz System on Chip

Key Features

- **Core:** ARM® Cortex-M0+ 32-bit microcontroller
- **Memory:** 24 KB Flash, 3 KB SRAM
- **Peripherals:** PWM, ADC, UART, SPI, I²C, Buzzer support
- **RF Transmitter:** Max. TX power up to **+7 dBm** (adjustable)
- **RF Receiver Sensitivity:**
- **-87 dBm** @ BLE 1 Mbps data rate
- **-97 dBm** @ 2.4G 62.5 Kbps data rate
- **Package:** 15 GPIO pins in **TSSOP-20** package

Product Overview

The DCT32B5805F05T20 is a low-cost, highly integrated Bluetooth Low Energy SoC. It incorporates a radio transceiver, frequency synthesizer, GFSK modem, and low-power MCU on a single chip.
The transmitter supports adjustable output power. The receiver utilizes digital expansion mechanism, achieving excellent performance in complex environments. It transmits GFSK signals with maximum output power of +7 dBm. The low-IF receiver architecture provides sensitivity down to -97 dBm @ 62.5 Kbps.
The integrated MCU is power-efficient with wake-up functionality, featuring 24 KB program space and 3 KB data space, programmable in C/C++/Assembly using IDEs like Keil MDK and IAR EWARM.
Requiring minimal external components, the chip can be implemented on single-layer PCB, supporting 33mm wire antenna. RoHS compliant.

封装管脚顺序：

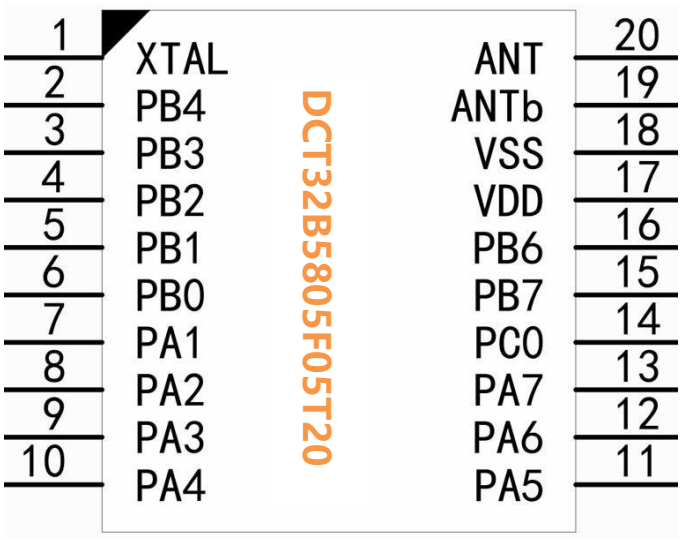
DCT32B5805F05T20
1 XTAL
2 PB4
3 PB3
4 PB2
5 PB1
6 PB0
7 PA1
8 PA2
9 PA3
10 PA4
20 ANT
19 ANTb
18 VSS
17 VDD
16 PB6
15 PB7
14 PC0
13 PA7
12 PA6
11 PA5

DCT32B5805F05T20参考原理图

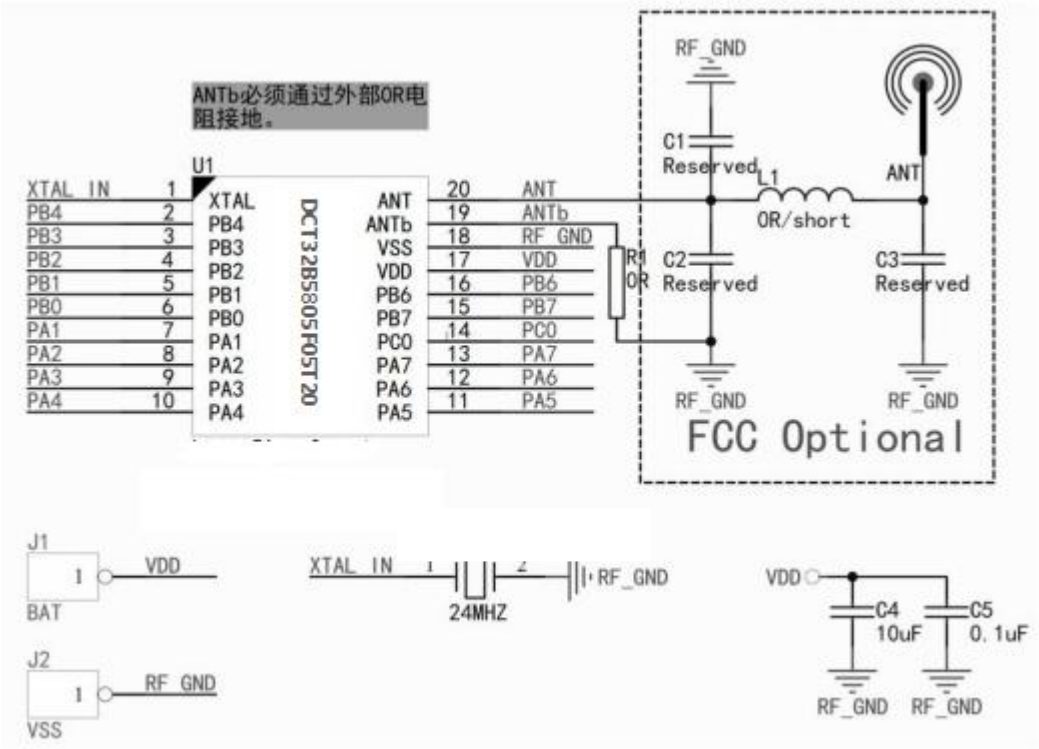

封装尺寸参数

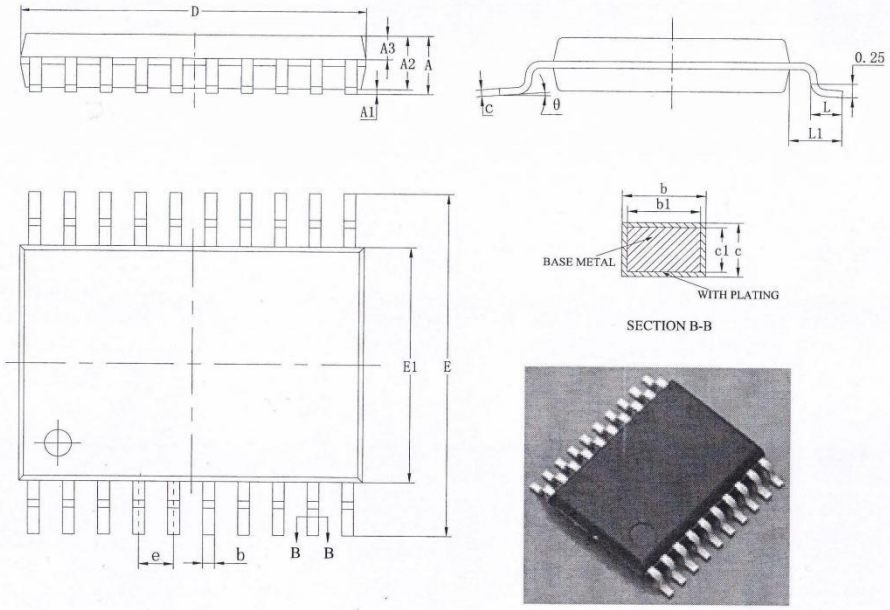

SYMBOL	MILLIMETER		
	MIN	NOM	MAX
A	—	—	1.20
A1	0.05	—	0.15
A2	0.80	1.00	1.05
A3	0.39	0.44	0.49
b	0.20	—	0.28
b1	0.19	0.22	0.25
c	0.13	—	0.17
c1	0.12	0.13	0.14
D	6.40	6.50	6.60
E1	4.30	4.40	4.50
E	6.20	6.40	6.60
e	0.65BSC		
L	0.45	0.60	0.75
L1	1.00REF		
θ	0	—	8°

TIAN SHUI HUA TIAN TECHNOLOGY CO., LTD
天水华天科技股份有限公司
文件控制中心
DOCUMENT CONTROL CENTER

正式文件
不准复印
17年2月14日

REV.	Description	Signature	Date
Drafted By	WANG Xia	Verified By	QI Zhiqiang
Confirmed By	CHEN Guolan	Verified By	HE Naihui
Verified By	HE Wenhai	Approved By	LU Dailie

Tianshui Huatian Technology Co., LTD.

Title: TSSOP20L POD(8R)

DWG No. HTFK0200604-8P | REF No. JEDEC MO-153

Unit mm | REV. A | Effective Date 2017/02/06

极限值

Table 1. 射频极限值

Parameter	Symbol	MIN	TYP	MAX	Unit
工作温度.	T_{OP}	-10		+85	℃
存储温度.	$T_{STORAGE}$	-55		+125	℃
工作电压	V_{IN_MAX}	2.4	3.3	+5.0	VDC
IO电压	V_{OTHER}	-0.3		+5.0	
输入射频信号强度	P_{IN}			+7	dBm

Notes:

1. **极限值表示芯片在超出此条件工作时，可能会损坏。芯片在建议工作值范围内功能正常。**
2. **芯片对静电比较敏感，在运输和存储时，最好使用防静电设备，用机器或手工焊接时要有良好的接地。**

射频电气特性

Table 1. 电气特性

下面的电气特性都是在 TA = 25 C, LDO_VDD= VDD_IO = 3.3 VDC条件下得到的。

Parameter	Symbol	MIN	TYP	MAX	Units	Test Condition and Notes
工作电压						
直流工作电压		2.4		5.0	VDC	Input to VDD_IO and LDO_VDD pins.
工作电流						
TX工作电流	IDD_TXH		24		mA	POUT =2dBm
	IDD_TXL		15		mA	POUT = low power setting
RX工作电流	IDD_RX		18		mA	
Idle mode工作电流	IDD_IDLE1		1.4		mA	Configured for BRCLK output running.
	IDD_IDLE2		1.1		mA	Configured for BRCLK output OFF.
Sleep mode工作电流	IDD_SLP		10		uA	
数字输入						
高电平电压	VIH	0.8 VDD_IN		1.2 VDD_IN	V	
低电平电压	VIL	0		0.8	V	
输入电容	C_IN			10	pF	
输入漏电	I_LEAK_IN			10	uA	
数字输出						
高电平电压	VOH	0.8 VDD_IN		VDD_IN	V	
低电平电压	VOL			0.4	V	
输出电容	C_OUT			10	pF	
输出漏电	I_LEAK_OUT			10	uA	
I2C电平边沿时间	T_RISE_OUT			5	nS	
时钟信号						
I2C时钟沿上升下降时间	Tr_spi			25	nS	Requirement for error-free register reading, writing.
I2C时钟速度	FSPI	0	2		MHz	

收发器特性						
工作频率	F_OP	2400		2482	MHz	
天线端口差异	VSWR_I		<2:1		VSWR	Receive mode.
(Z0=50Ω)	VSWR_O		<2:1		VSWR	Transmit mode.

Parameter	Symbol	MIN	TYP	MAX	Unis	Test Condition and Notes
Receive Section						Measured using 50 Ohm balun. For BER ≤ 0.1%:
接收灵敏度			-87		dBm	1Mbps
			-90		dBm	250Kbps
			-93		dBm	125Kbps
			-98		dBm	62.5Kbps
最大输入功率		-20	1		dBm	
数据率	Ts		1		us	
抗干扰特性						For BER ≤ 0.1%
同频干扰	CI_cochannel		+9		dB	-60 dBm desired signal.
1MHz相邻信号干扰	CI_1		+6		dB	-60 dBm desired signal.
2MHz相邻信号干扰	CI_2		-12		dB	-60 dBm desired signal.
3MHz相邻信号干扰	CI_3		-24		dB	-67 dBm desired signal.

带外干扰	OBB_1	-10			dBm	30 MHz to 2000 MHz	Meas. with ACX BF2520 ceramic filter 2 on ant. pin . Desired sig. -67 dBm, BER ≤ 0.1%.
	OBB_2	-27			dBm	2000 MHz to 2400 MHz	
	OBB_3	-27			dBm	2500 MHz to 3000 MHz	
	OBB_4	-10			dBm	3000 MHz to 12.75 GHz	
Transmit Section						Measured using 50 Ohm balun3:	
发射功率	PAV			6	dBm	POUT= maximum output power Reg09=0x4800	
			2	10		POUT = nominal output power, Reg09=0x6030	
		-17				POUT=minimum output power,Reg09=1FC0	
二次谐波			-50		dBm	Conducted to ANT pin.	
三次谐波			-50		dBm	Conducted to ANT pin.	
调制特性							
最大频偏 00001111 pattern	Δf1avg		280		kHz		
最大频偏 01010101 pattern	Δf2max		225		kHz		
带内辐射							

	2MHz频偏	IBS_2			-40	dBm	
	>3MHz频偏	IBS_3			-60	dBm	
带外辐射		OBS_O_1		< -60	-36	dBm	30 MHz ~ 1 GHz
		OBS_O_2		-45	-30	dBm	1 GHz ~ 12.75 GHz, excludes desired signal and harmonics.
		OBS_O_3		< -60	-47	dBm	1.8 GHz ~ 1.9 GHz
		OBS_O_4		< -65	-47	dBm	5.15 GHz ~ 5.3 GHz

Note:

1. 测试是在2460MHz频率下进行，干扰信号以1MHz间隔测试。同时因为干扰信号的谐波会影响性能，所以要对其进行良好的滤波。
2. 在一些应用中，天线前端会加上滤波器，或者受到天线有效带宽的限制。

Parameter	Symbol	MIN	TYP	MAX	Unit	Test Condition and Notes	
射频VCO和PLL PLL锁定范围	FLOCK	2366		2516	MHz		
发射接收机频偏			--		ppm	Same as XTAL pins frequency tolerance	
信道宽度			1		MHz		
单边带相位噪声			≤ -95		dBc/Hz	550kHz offset	
			≤ -115		dBc/Hz	2MHz offset	
晶体频率			24.000		MHz	Designed for 24 MHz crystal reference freq.	
芯片内部晶体调节范围			±20		ppm	See Register 27 description. Amount of pull depends on crystal spec. and operating point.	
PLL稳定时间	THOP		75	150	uS	Settle to within 30 kHz of final value.	
辐射	OBS_1		< -75	-57	dBm	30 MHz ~ 1 GHz	IDLE state, Synthesizer and VCO ON.
	OBS_2		-68	-47	dBm	1 GHz ~ 12.75 GHz	
LDO电压							
压降范围	Vdo		0.17	0.5	V	Measured during Receive state	