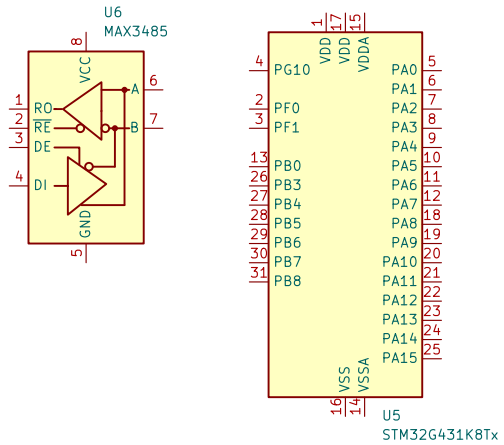

drivers

File: Drivers.kicad_sch

OpenLSM

Sheet: /
File: main.kicad_sch

Title: Bridge Driver

Size: A4	Date: 2026-08-03	**Rev: 0**
KiCad E.D.A. 10.0.0		Id: 1/2

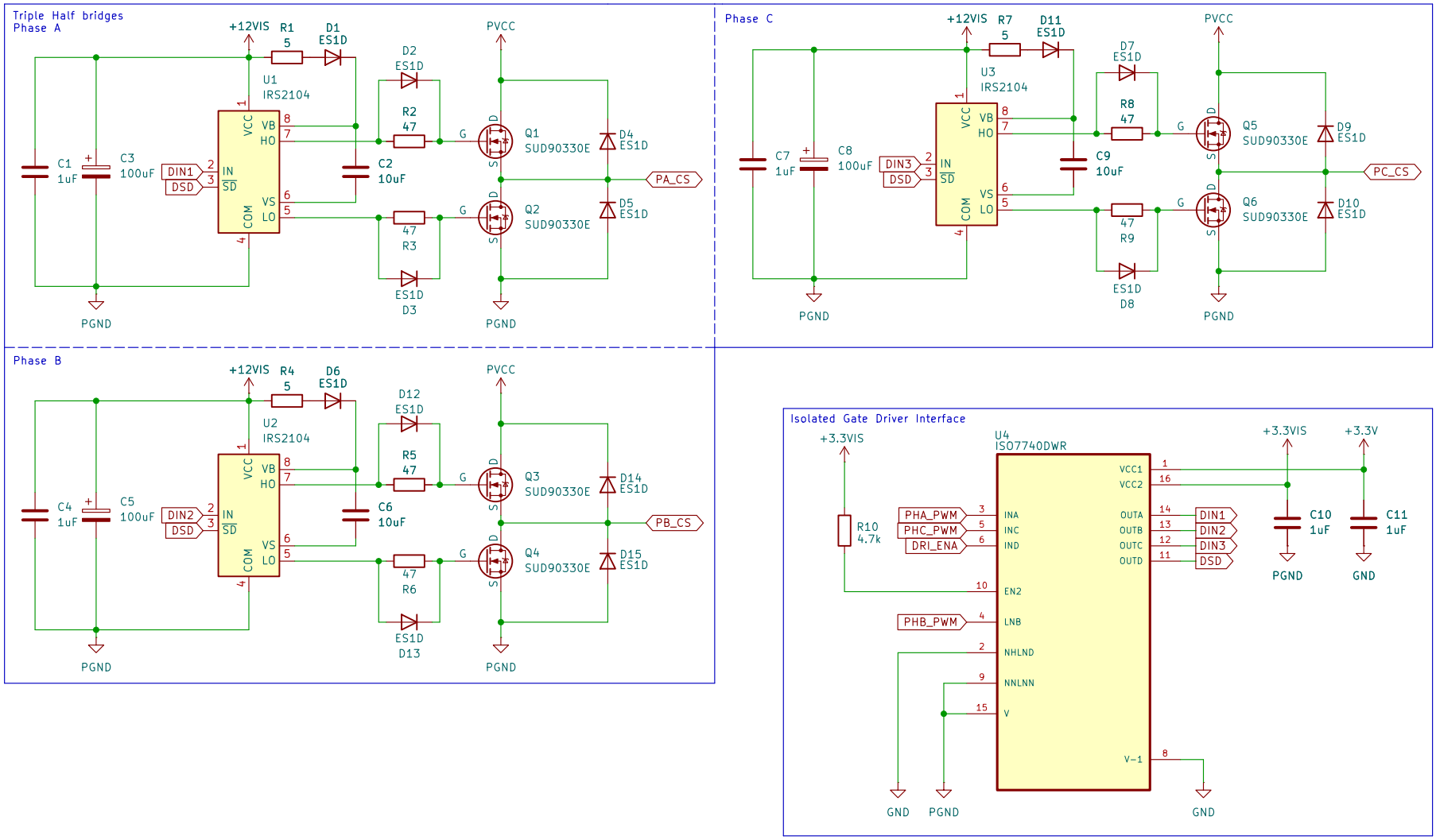

OpenLSM

Sheet: /drivers/
File: Drivers.kicad_sch

Title: Phase Drivers & Isolation

Size: A4	Date:	Rev:
KiCad E.D.A. 10.0.0		Id: 3/2