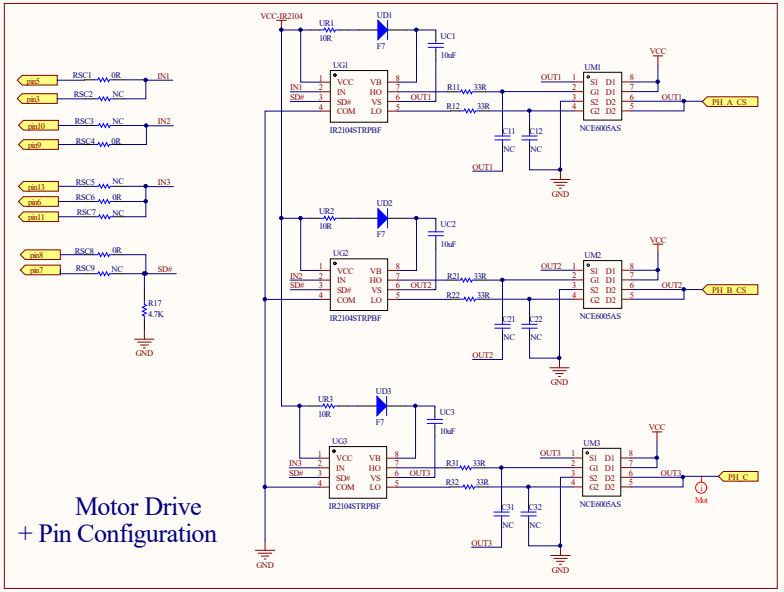

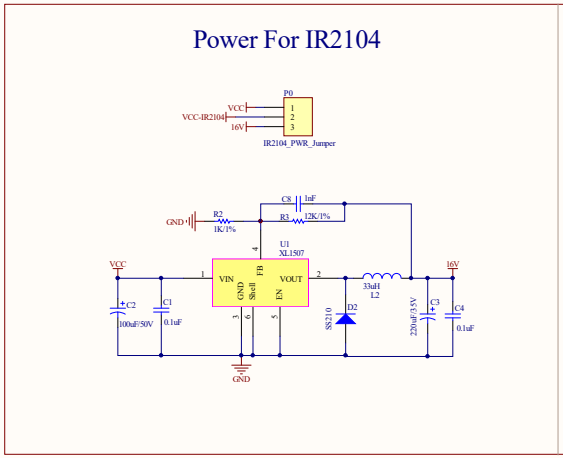

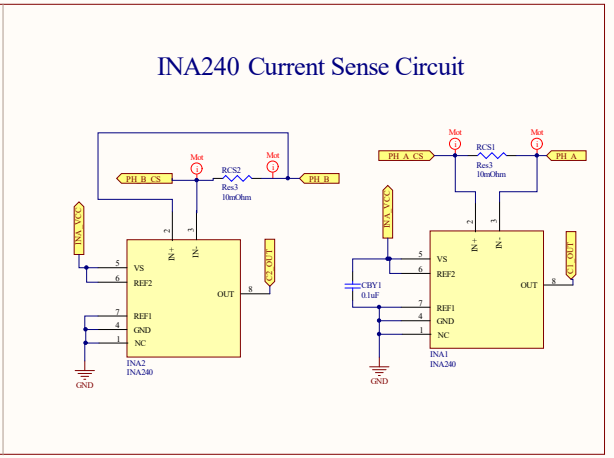

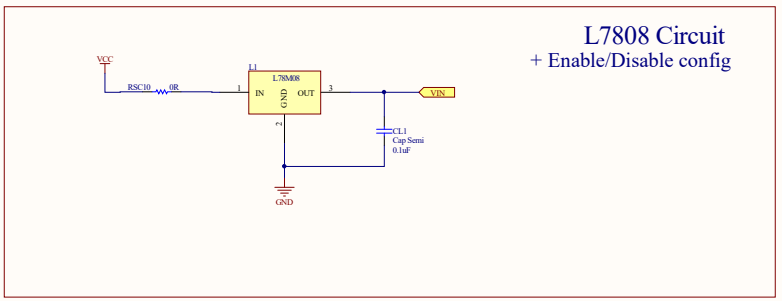

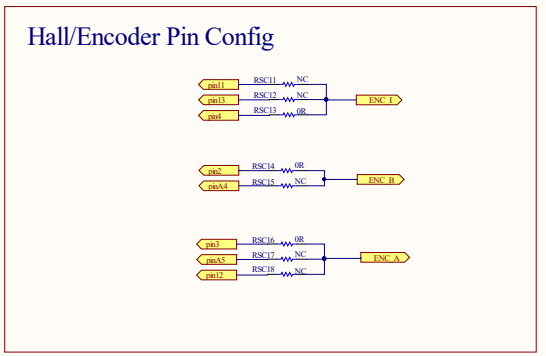

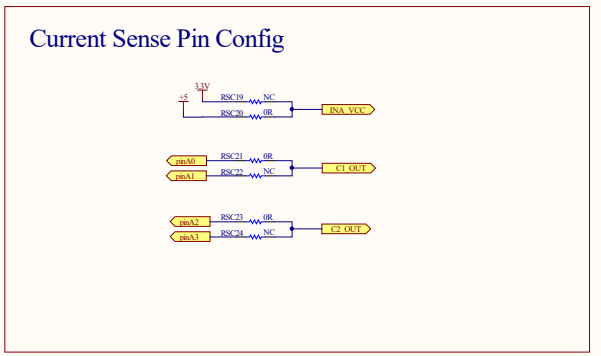

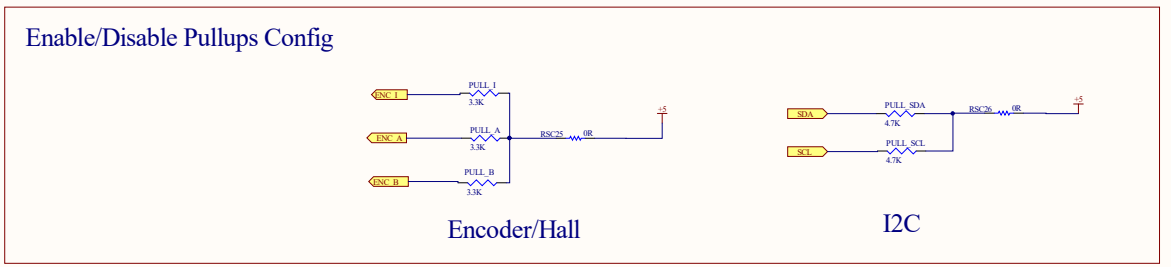

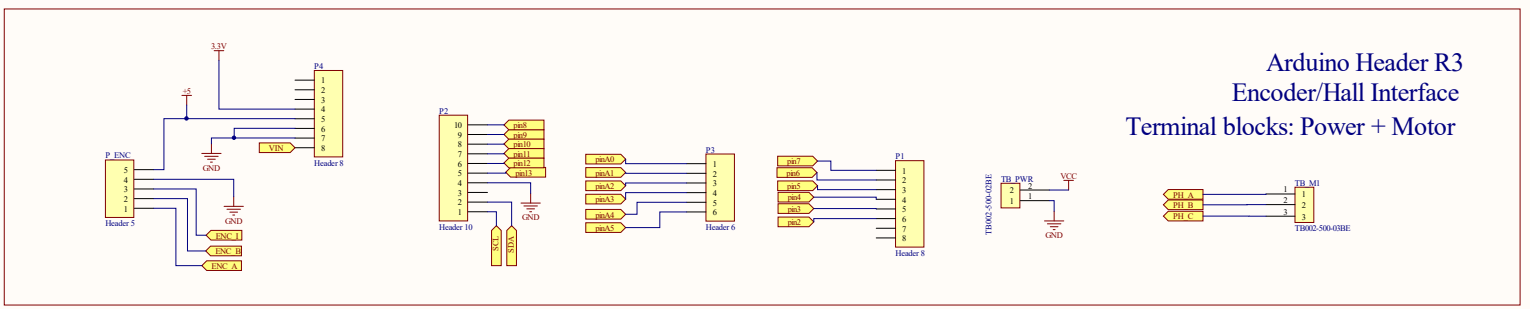

Title: FOC_Arduino(303FOCARDU1)		
Size: A2	Number: 2	Revision: XCC
Date: 2024/2/23	Sheet of	
File: D:\ \\FOC_Arduino(303FOC.DDB\Sch\Sch1.SchDoc		