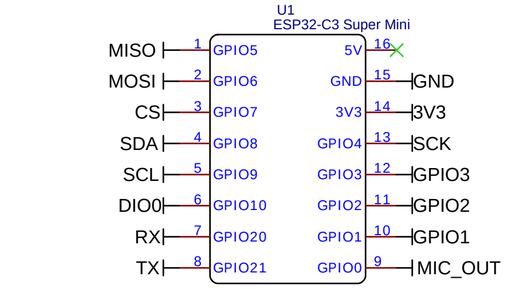

ESP32C3 Super Mini

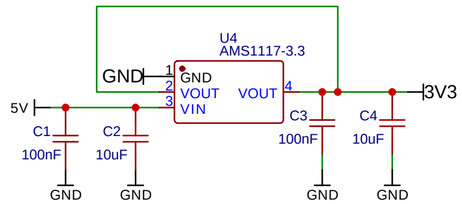

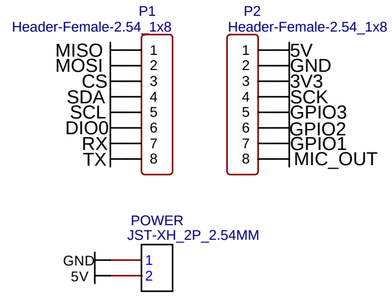

Connectiques

Improvements : Oled screen or visualisation led ?

The SD trace should have a 100 kΩ pulldown resistor to discharge the line during the time that all microphones on the bus have tri-stated their outputs.

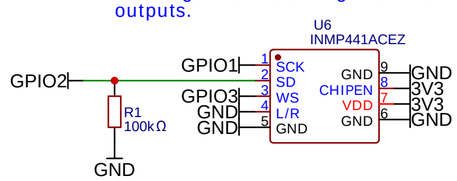

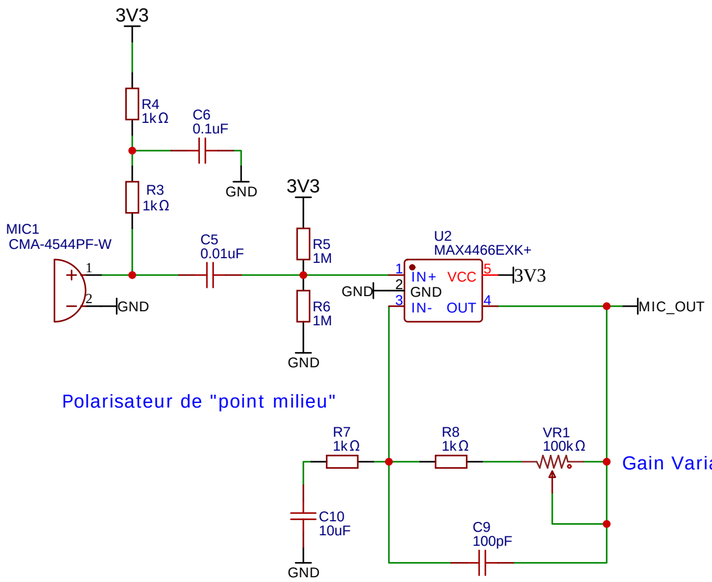

Polarisateur de "point milieu"

Gain Variable = (VR + R8)/R7 +1 -> 25-125x

Passe bas F3db=1/R7*C10*2pi

Microphone Electret

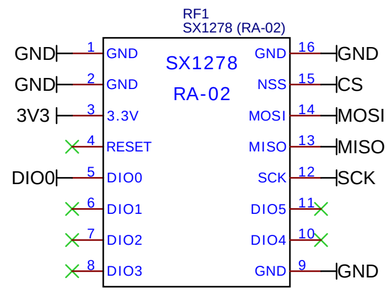

LoRa

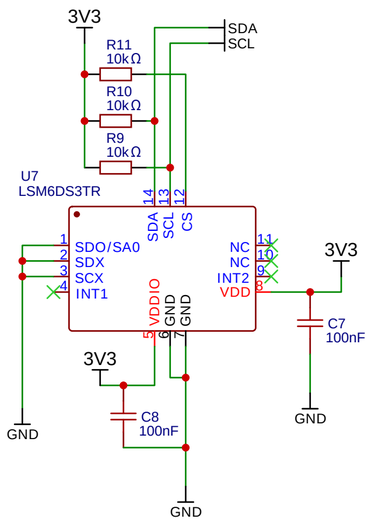

Acc/Gyr

TITLE: Leak Detection Module		REV: 1.0
	Company: What a Leak	Sheet: 1/1
	Date: 2024-10-08 Drawn By: Robin Marin--Muller	